Ski-Daddler SNOWMOBILE

MODELS
5813-0100
5813-0200

PARTS AND SERVICE MANUAL

AMF

AMERICAN MACHINE & FOUNDRY COMPANY
CONSUMER PRODUCTS SALES DIVISION
PARTS & SERVICE DEPARTMENT
Whiteford Road, York, Pennsylvania 17402 • Area Code 717 848-1177

PART NO. 37951

The following information is for Models
58130100 and **58130200**

TABLE OF CONTENTS

All information in the preceding section relative to Models 5811, 5812, 5814, and 5815, apply to Model 5813 except the information under POWER TRAIN on pages 6 and 7, BRAKE ADJUSTMENT and TO REMOVE DRIVE SPROCKETS on page 8, and DRIVE BELT ADJUSTMENT on page 6.

TO REMOVE DRIVE SPROCKETS

1. Remove the battery from the sled. Remove cables from battery terminals. Remove battery hold-down fasteners.
2. Place rear of sled on kick-stand.
3. Release track tension by removing both right hand and left hand adjuster plates. Remove all fasteners holding adjuster plates to the frame (See Figure 1).

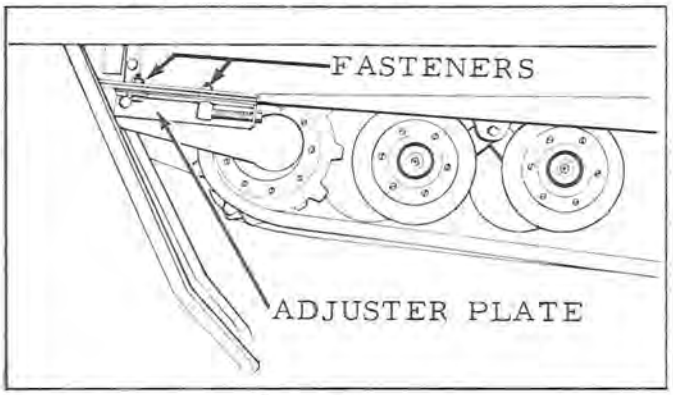

Figure 1

4. Remove the three screws, lock washers, and nuts that hold the bearing retainer to the right side of the sled (See Figure 2).
5. Turn sled up on its right side. With the sled on its right side, the grease in the gear case will not run out as much as it would if the sled were on its left side.
6. Remove lacer pins from the drive track by bending the ends straight and pulling them out.

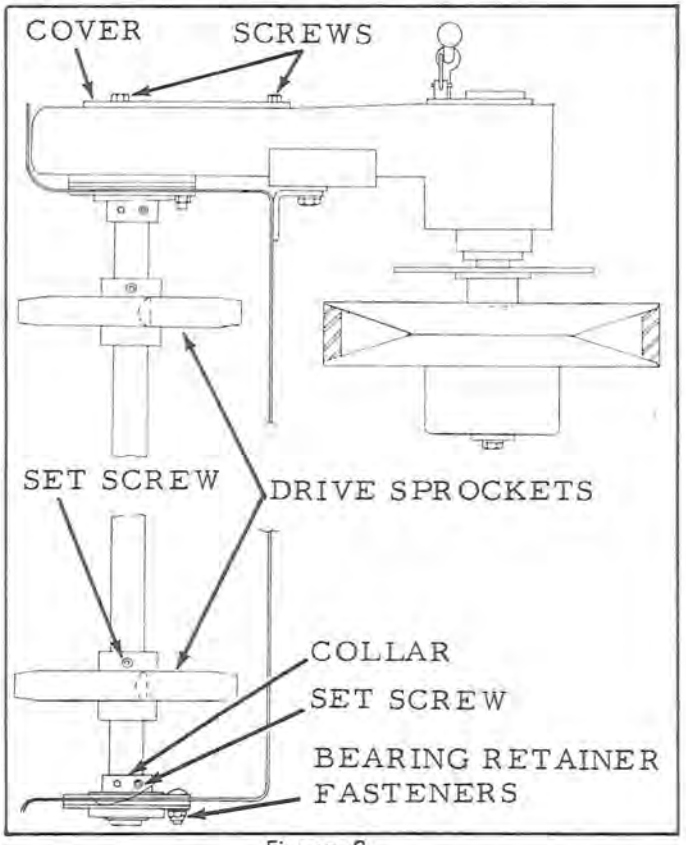

Figure 2

7. Pull belt to one side so you can gain access to the drive sprockets.
8. Remove the set screw in the collar at both ends of the drive shaft. There is a notch in each collar. Insert a punch into the notch. Tap the punch lightly to loosen the collar (See Figure 2).
9. Remove the three screws which secure the chain case cover (See Figure 2).
10. Remove the bolt and washer from the end of the drive shaft (See Figure 3). Tap on the drive sprockets with a hammer. Tap them to the right side. This will free the drive shaft from the gear shaft.
11. Loosen set screws which hold the drive sprockets in place. Slide them off the left end of the drive shaft.
12. Replace or repair sprockets.
13. Reassemble in opposite order.
14. When replacing the drive shaft into the gear case, align the large sprocket and the spacer behind it with your finger before inserting the drive shaft (See Figure 4). Insert shaft and align notches on the end of the drive shaft with those on the sprocket in the gear case. Follow instructions under TRACK ALIGNMENT, and TRACK TENSION ADJUSTMENT when reassembly is completed.

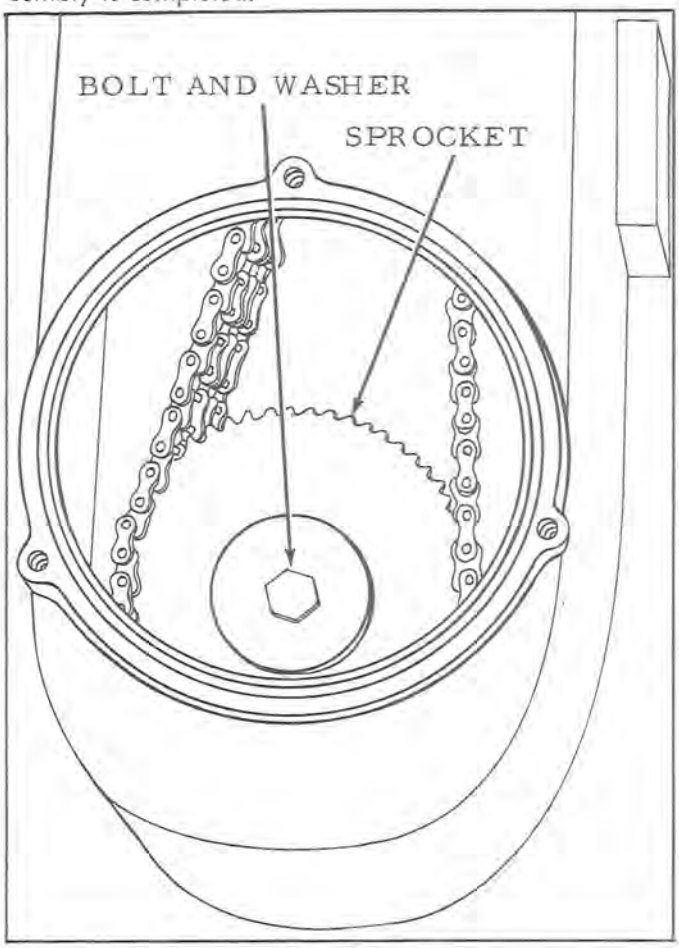

Figure 3

BRAKE ADJUSTMENT

The brake on this unit is a disc caliper type. Take the following steps to adjust:

1. If the brake is too loose and needs tightening, loosen the two allen screws as shown in Figure 5. Pull brake cable tight and tighten allen screws.
2. If further adjustment is needed, remove cotter pin from the castle nut on the brake arm and tighten castle nut down until the brake pads just drag on the

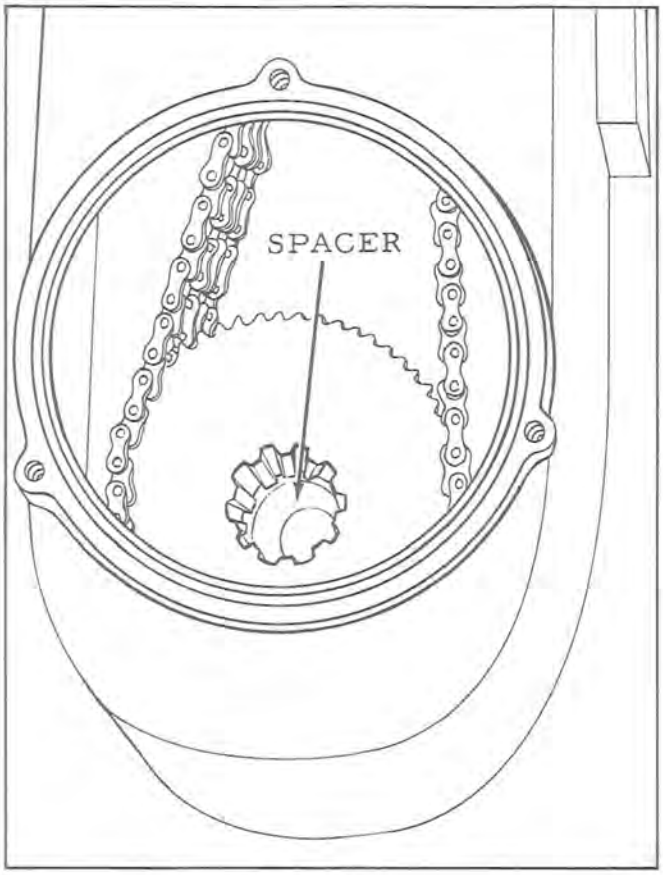

Figure 4

brake disc. Then back the castle nut off one notch and reinstall cotter pin (See Figure 5).

3. If brake is too tight reverse the above procedure.

DRIVE BELT ADJUSTMENT

Figures 6 and 7 show two cut-away views of the chain and gear case. If drive belt is too loose, loosen the two fasteners marked "A" in Figures 6 and 7. Fasteners are located on the inside of the gear case just above the frame. Loosen the fasteners marked "B" in Figures 6 and 7. They are located at the bottom of the gear case on the inside. Access to these fasteners is obtained by reaching underneath the side of the sled. With the fasteners loose, the gear case can be moved approximately ¼ inch forward or backward. Move the gear case forward to tighten the drive belt and move it backward to loosen the belt. When adjustment is completed, tighten fasteners marked "A" and "B" as shown in Figures 6 and 7.

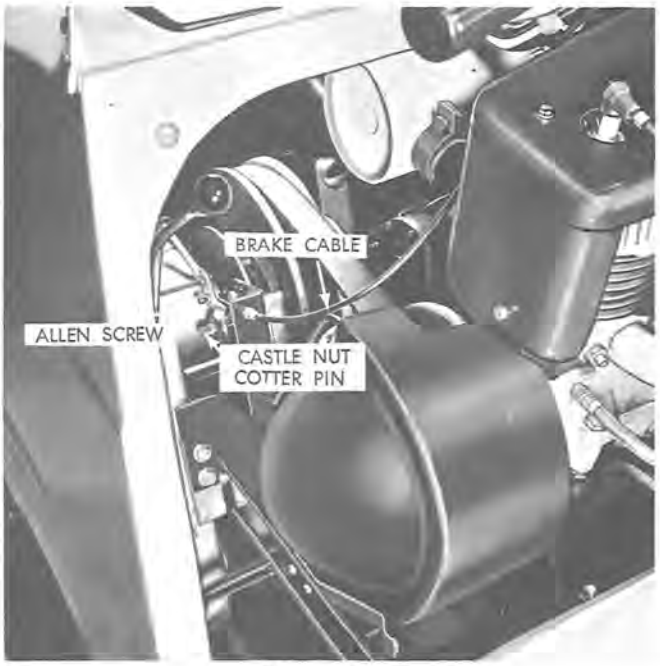

Figure 5

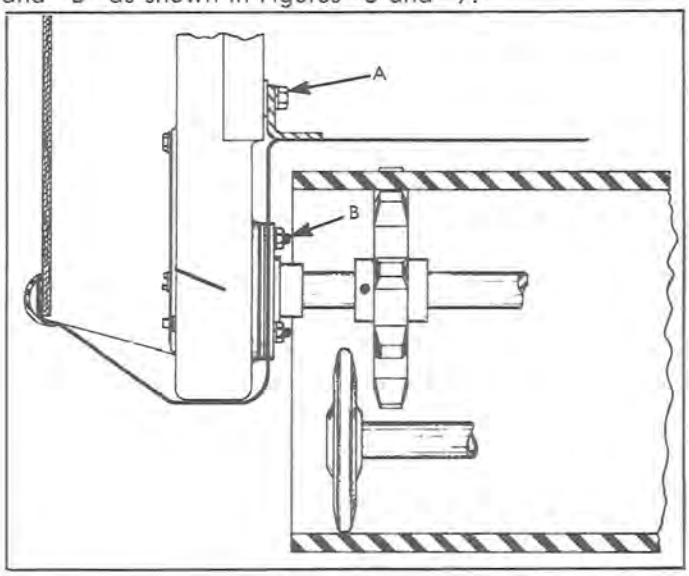

Figure 6

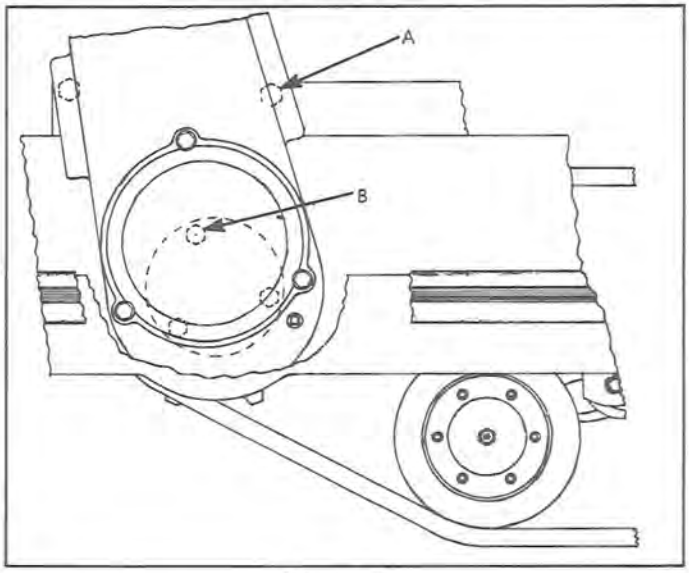

Figure 7

CARBURETOR ADJUSTMENTS

IT IS IMPORTANT NOT TO FORCE ADJUSTMENTS INTO SEATS. The single carburetor used is a Tillotson Model HR Carburetor. For best results the engine should be warm when final carburetor adjustments are made. Figure 8 shows the left side of the carburetor and Figure 9 shows the right side.

1. **STARTING A COLD ENGINE**—Close choke and crank engine. After the engine starts move the choke to the open position.

2. **STARTING A WARM ENGINE**—It should be started with the choke open. The choke is shown in Figure 8.

3. **TO ADJUST CARBURETOR**—Turn in high speed jet all the way, **(DO NOT FORCE)** Then open 1¼ turns as shown in Figure 8.

When engine is warm place unit on kickstand and slowly accelerate to high speed. Turn high speed ad-

justment needle in to the point where the engine runs the fastest and smoothest, then open needle (turn out ¼ turn).

Turn in the idle mixture screw all the way **(DO NOT FORCE).** Open one full turn as shown in Figure 8. This adjustment controls the mixture at idling speeds. A lean idle mixture will cause poor acceleration. Adjust the idle speed screw shown in Figure 9. Keep idle speed slower than clutch engaging speed (approx. 1750-2000 RPM).

NOTE: Figure 9 also shows a throttle wire adjustment collar and screw. Remove carburetor air cleaner. Depress the throttle control. If this does not open the throttle plate completely, loosen the throttle wire adjustment screw and readjust to open throttle.

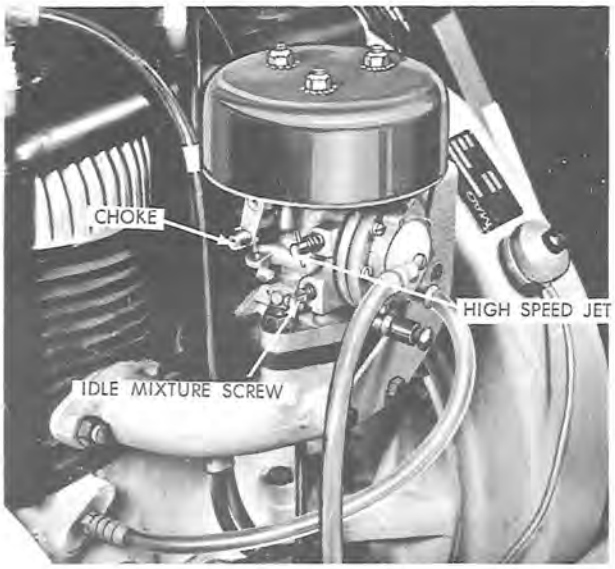

Figure 8

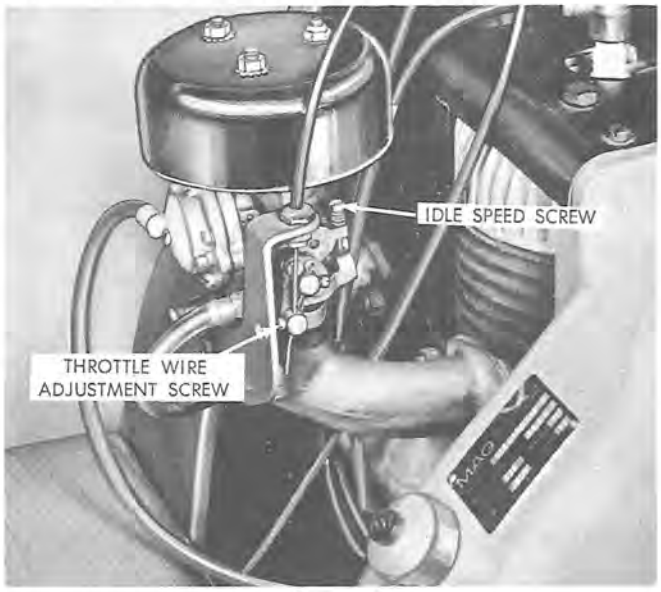

Figure 9

REPAIRMAN'S REFERENCE WIRING DIAGRAM

The wiring diagram shown here is a technical explanation of the circuitry on this unit. It is intended for use by repairman or owners capable of reading and using wiring diagrams.

The various component parts have been labeled. See your Service Dealer for part numbers, price and ordering information. Also see your Service Dealer for available Service Manual.

We recommend that unless you are fully qualified to make repairs on the electrical system on this unit, you take it to a competent repairman for such work or adjustments.

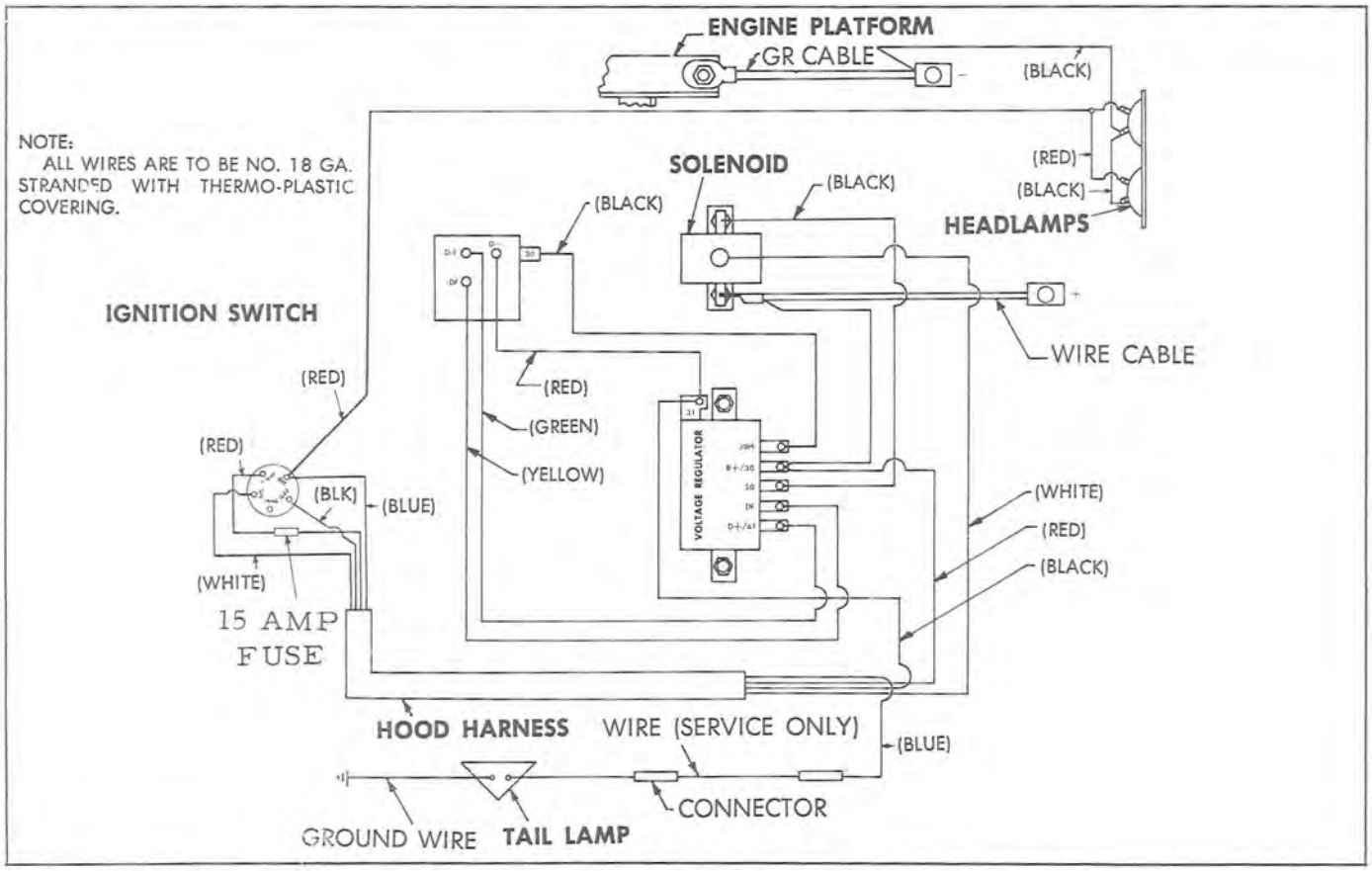

AMF SKI-DADDLER SNOWMOBILE

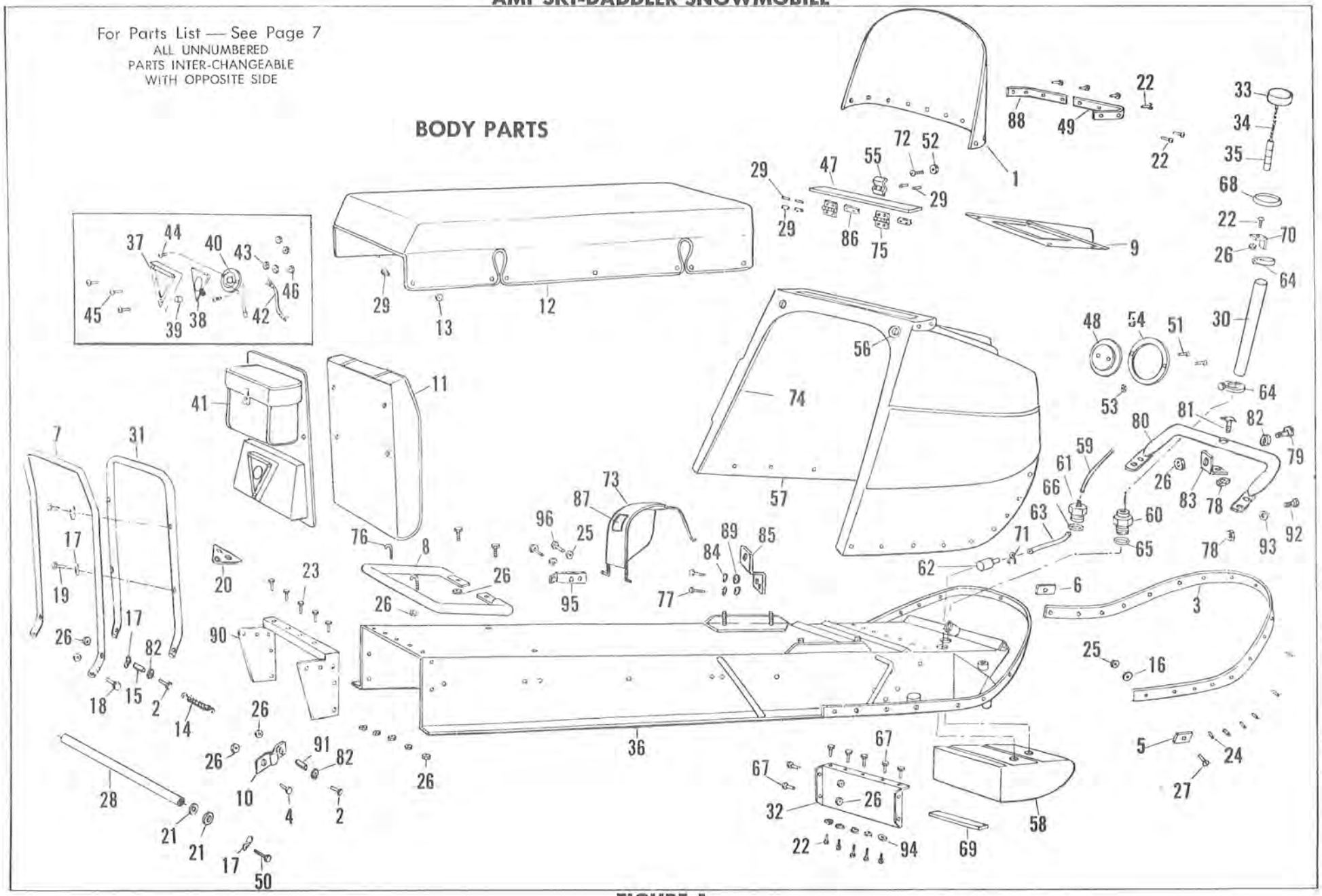

FIGURE 1

AMF SKI-DADDLER SNOWMOBILE MODELS 58130100, 58130200

ALWAYS GIVE THE FOLLOWING INFORMATION WHEN ORDERING REPAIR PARTS:

1. THE PART NUMBER 2. THE PART NAME 3. QUANTITY DESIRED 4. THE MODEL NUMBER

SEND PART ORDERS AS PER INSTRUCTIONS ON PAGE 2.

Your Unit is Right Hand (R.H.) or Left Hand (L.H.) as you stand behind it.

DO NOT USE KEY NUMBERS WHEN ORDERING REPAIR PARTS, ALWAYS USE PART NUMBERS.

FIGURE 1 PARTS LIST FOR BOTH MODELS

Key No.	Part No.	Description
1	30418	Windshield
2	180042	1/4"-20 x 1 3/4" Hex Hd. Sc.
3	32485	Rubber Bumper Strip
4	180016	1/4"-20 x 1/2" Hex Hd. Sc.
5	30376	End Cap Trim—R.H.
6	30377	End Cap Trim—L.H.
7	32491	Kick Stand Tube
8	30395	Hand Rail Tube
9	32468	Hood Access Lid
10	32231	"V" Bracket
11	30398	Seat Back
12	32489	Seat
13	30233	Snap—Male Half
14	32234	Spring
15	32230	Short Spacer
16	2251	7/32" x 3/4" Washer
17	8728	Formed Washer
18	121913	*1/4"-20 x 1 1/4" Hex Hd. Sc.
19	121926	*1/4"-20 x 1 1/2" Hex Hd. Sc.
20	32252	Hitch Plate
21	120394	*5/16" Washer
22	125680	*1/4"-20 x 5/8" Truss Hd. Mach. Sc.
23	120854	*1/4"-20 x 5/8" Hex Hd. Sc.
24	30275	3/16" x 5/8" Pop Rivet
25	457509	*No. 10-24 Lock Nut
26	997314	*1/4"-20 Lock Nut
27	120691	*No. 10-24 x 1 1/4" Flat Hd. Sc.
28	30402	Shaft
29	30276	*1/8" Pop Rivet
30	30400	Fuel Inlet Tube Assy.
31	32486	Seat Back Tube
32	30412	Fuel Tank Retainer Plate Assy.
33	30268	Gas Cap
34	30624	Chain
35	30269	Fuel Level Indicator
36	32466	Main Frame Assy.
37	29080	Tail Lamp Door
38	29081	Tail Lamp Lens
39	29266	Rubber Spacer
40	30363	Tail Lamp
41	32448	Seat Back Cover & Pouch
42	30362	Tail Lamp Ground Wire
43	120622	*No. 8-32 Hex Nut
44	132764	*No. 8-32 x 5/8" Rd. Hd. Mach Sc.
45	134186	*No. 6-32 x 1" Oval Hd. Sc.
46	271482	*No. 6-32 Lock Nut
47	30581	Glove Box Lid
48	30218	Head Lamp Assy.

Key No.	Part No.	Description
49	30630	Windshield Trim Strip R.H.
50	181618	5/16"-24 x 1 3/4" Hex Hd. Sc.
51	134244	*No. 8-32 x 1 1/4" Oval Hd. Sc.
52	996907	*No. 10-32 Hex Nut
53	457514	*No. 8-32 Lock Nut
54	30283	Sponge Pad
55	32253	Latch
56	16775	Ignition Decal
57	30417	Hood
58	31450	Fuel Tank
59	30229	Gas Line—Long
60	30263	Gas Tank Inlet Fitting
61	30264	Gas Tank Outlet Fitting
62	32512	Fuel Filter
63	30270	Fuel Pick-Up Tube
64	24180	Hose Clamp
65	30278	"O" Ring 1 1/2" O.D.
66	30279	"O" Ring 1 1/4" O.D.
67	120706	*1/4"-20 x 1/2" Hex Hd. Sc.
68	30810	Hood Grommet
69	31763	Rubber Strip
70	30365	Support Angle
71	30488	Hose Clamp
72	132911	*No. 10-32 x 5/8" Rd. Hd. Sc.
73	32331	Clutch Guard
74	30605	Plastic Hood Trim
75	30272	Hinge
76	30171	J-Bolt
77	122007	*5/16"-18 x 3/4" Hex Hd. Sc.
78	9413447	*5/16"-18 Lock Nut
79	121893	*1/4"-20 x 7/8" Screw
80	32509	Bumper
81	27522	5/16"-18 Curved Hd. Bolt
82	446188	*1/4" Washer
83	32537	Support Plate
84	120638	*5/16" Lock Washer
85	32452	Brake Mounting Bracket
86	30285	Plate (Glove Box Lid)
87	16782	Decal F.N.R.
88	30631	Windshield Trim Tape L.H.
89	456145	*5/16" Washer
90	32467	Seat Back Angle Assy.
91	32229	Long Spacer
92	998010	5/16"-18 x 3/4" Carr. Bolt
93	446363	*5/16" Washer
94	121753	*Shakeproof Washer
95	32536	Spring Plate
96	120221	*No. 10-24 x 1/2" Rd. Hd. Sc.

*Standard Hardware Items may be purchased locally.

For Illustration See Page 6

All prices subject to change without notice.

All replacement parts will be supplied in current production colors or in a neutral color.

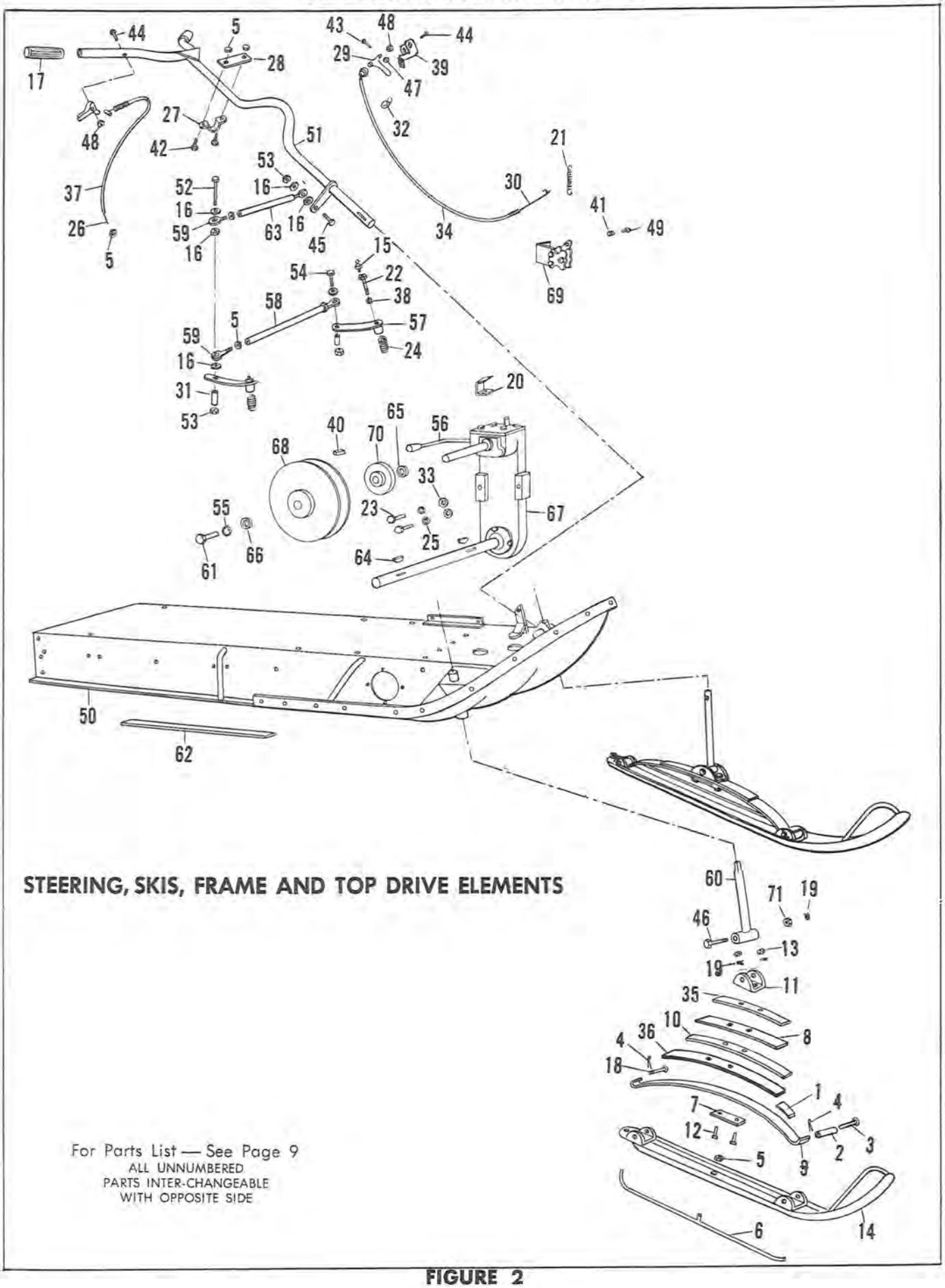
STEERING, SKIS, FRAME AND TOP DRIVE ELEMENTS
For Parts List — See Page 9
ALL UNNUMBERED
PARTS INTER-CHANGEABLE
WITH OPPOSITE SIDE

FIGURE 2

AMF SKI-DADDLER SNOWMOBILE

STEERING, SKIS, FRAME AND TOP DRIVE ELEMENTS

FIGURE 2 PARTS LIST FOR BOTH MODELS

Key No.	Part No.	Description
1	30247	Bumper Pad
2	8441	Spring Roller
3	28762	Spring Pivot Pin
4	137185	* 1/8" x 1" Cotter Pin
5	997314	* 1/4"-20 Centerlock Nut
6	32542	Ski Wear Rod Assy.
7	28764	Spring Plate
8	28766	Leaf Spring
9	28770	Main Leaf Spring
10	29645	Middle Leaf Spring
11	28769	Spring Mounting Bracket
12	995371	3/8"-24 x 1 1/2" Hex Hd. Sc.
13	995224	3/8"-24 Slotted Nut
14	32624	Ski and Wear Rod Assy.
15	706	Grease Fitting
16	21777	Spacer Bushing
17	28416	Hand Grip
18	32174	Spring Pivot Pin
19	121222	*3/32" x 3/4" Cotter Key
20	30673	Brake Spring Bracket
21	24347	Spring
22	30117	Spindle Bolt
23	120233	* 3/8"-16 x 1" Hex Hd. Sc.
24	30149	Spring (Spindle)
25	120382	* 3/8" Lock Washer
26	32490	Throttle Control Cable
27	24054	"U" Strap
28	30211	Column Support Plate (Upper)
29	32187	Thumb Lever
30	32488	Brake Cable
31	30251	Spacer Bushing
32	32286	Cable Clamp
33	120396	* 3/8" Washer
34	32487	Housing (Brake Cable)
35	32539	Leaf Spring
36	32540	Leaf Spring

Key No.	Part No.	Description
37	32292	Cable Housing
38	120383	Lock Washer
39	32186	Clamp
40	30575	Square Key
41	25188	Swivel Button
42	121893	* 1/4"-20 x 7/8" Hex Hd. Sc.
43	445938	No. 6-32 x 3/8" Truss Hd. Sc.
44	142443	No. 10-32 x 1 3/8" Rd. Hd. Sc.
45	181643	* 3/8"-24 x 1 1/2" Hex Hd. Sc.
46	995364	3/8"-24 x 2 3/4" Hex Hd. Sc.
47	32188	Spacer
48	997319	*No. 10-32 Lock Nut
49	995339	No. 8-32 x 3/8" Socket Hd. Sc.
50	32466	Main Frame Assy.
51	32456	Steering Handle & Column Assy.
52	181652	3/8"-24 x 3" Hex Hd. Sc.
53	9415106	* 3/8"-30 Lock Nut
54	181650	3/8"-24 x 2 1/2" Hex Hd. Sc.
55	120638	*5/16" Lock Washer
56	32478	Lever Assy.
57	30060	Spindle Arm
58	30403	Tie Rod
59	30081	Rod End Bearing
60	30124	Spindle Tube Assy.
61	180079	5/16"-18 x 1" Hex Hd. Sc.
62	30228	Foot Pad
63	30561	Drag Link
64	30535	No. 706 Hi-Pro Key
65	30576	Washer (Disc Brake)
66	8103	Flat Washer
67	32480	Apex Gear Case Complete
68	30392	Driven Clutch
69	28783	Disc Brake
70	28784	Disc Brake Hub
71	32703	3/8"-24 Slotted Hex Nut

*Standard Hardware Items May Be Purchased Locally

For Illustration See Page 8

All prices subject to change without notice.

All replacement parts will be supplied in current production colors or in a neutral color.

DRIVE BELT AND LOWER DRIVE ELEMENTS

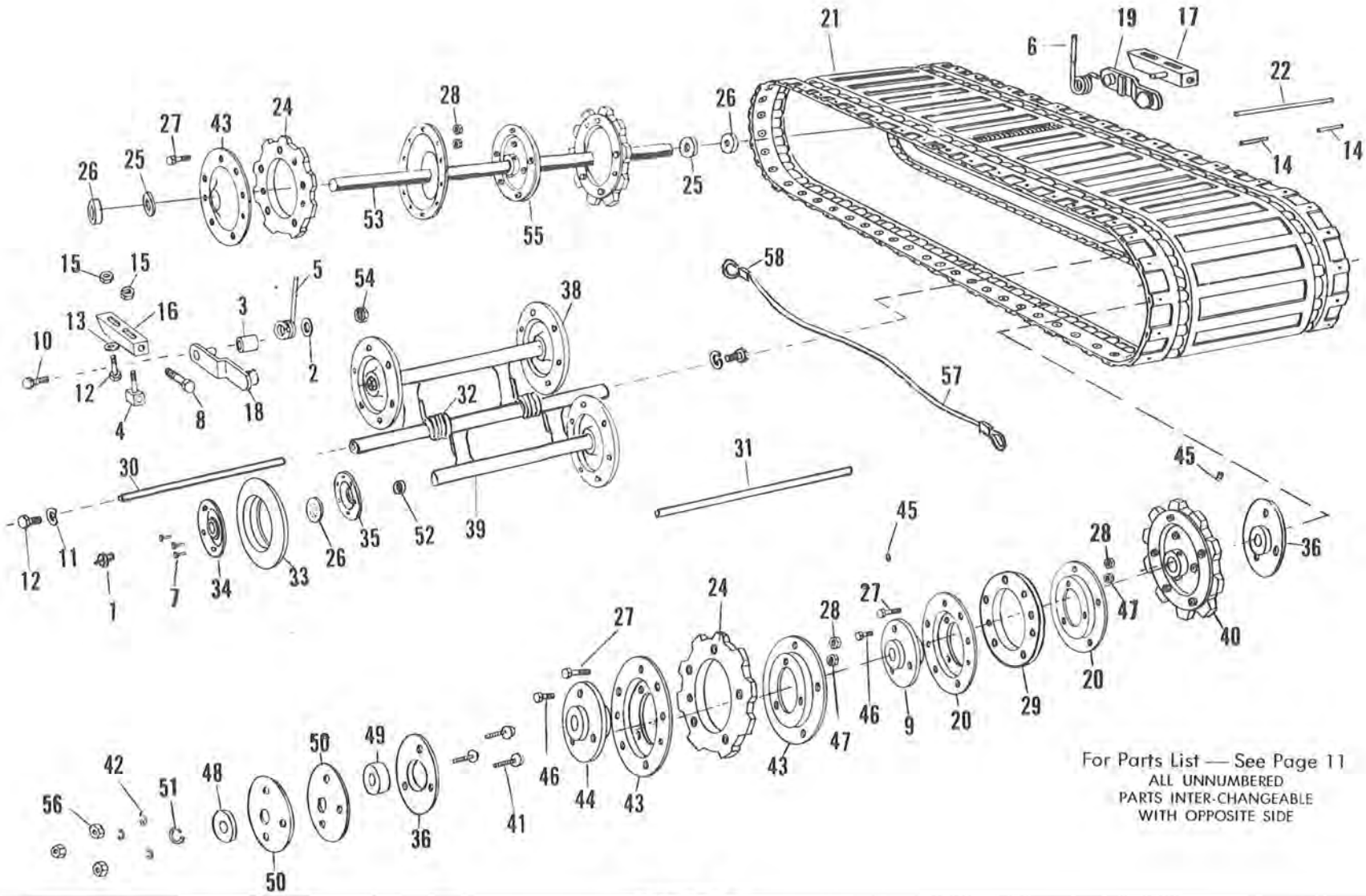

For Parts List — See Page 11
ALL UNNUMBERED
PARTS INTER-CHANGEABLE
WITH OPPOSITE SIDE

FIGURE 3

AMF SKI-DADDLER SNOWMOBILE
DRIVE BELT AND LOWER DRIVE ELEMENTS

FIGURE 3 PARTS LIST FOR BOTH MODELS

Key No.	Part No.	Description
1	706	Grease Fitting
2	32237	Spring Washer
3	32264	Spacer
4	32265	Adjusting Block
5	32492	Rear Torsion Spring R.H.
6	32493	Rear Torsion Spring L.H.
7	995809	Tubular Rivet
8	32266	3/8"-24 x 3" Hex Hd. Sc.
9	30524	Hub
10	181649	3/8"-24 x 2 1/4" Hex Hd. Sc.
11	138485	*5/16" Lock Washer
12	181595	*5/16"-24 x 3/4" Hex Hd. Sc.
13	456145	*5/16" Washer
14	30620	Short Hinge Wire
15	9414072	*5/16"-18 Lock Nut
16	32256	Belt Adjust. Angle Assy. R.H.
17	32257	Belt Adjust. Angle Assy. L.H.
18	32262	Rear Support Arm Assy. R.H.
19	32263	Rear Support Arm Assy. L.H.
20	30523	Plate
21	30100	Traction Belt Assy.
22	30621	Long Hinge Wire
23	32477	Rear Sprocket Consists of (24-25-26-27-28-38-55) Not Illustrated
24	29945	Rubber Sprocket—9 Tooth
25	30079	Grease Seal
26	30080	Ball Bearing
27	120222	*No. 10-24 x 5/8" Mach. Sc.
28	997316	*No. 10-24 Lock Nut
29	32453	Idler Wheel
30	30402	Boggie Wheel Support Shaft
31	32474	Boggie Wheel Support Shaft
32	32225	Boggie Wheel Spring
33	29942	Boggie Tire
34	29954	Boggie Wheel Half (Outer)
35	29953	Boggie Wheel Half (Inner)
36	30560	Bearing Back Up Plate
37	32475	Boggie Wheel Support Assy. Comp. (Front) Not Illus.
38	32473	Boggie Wheel Support Assy. Complete
39	32471	Boggie Support Assy.
40	30577	Drive Sprocket Assy. Consists of (24-27-28-43-44-45-46-47)
41	998010	5/16"-18 x 3/4" Carriage Bolt
42	120638	*5/16" Split Lock Washer
43	30523	Plate
44	30524	Hub
45	998503	5/16"-18 x 5/16" Set Sc.
46	121887	*1/4"-20 x 3/4" Hex Hd. Sc.
47	9413314	*1/4"-20 Lock Nut
48	31073	Link Belt Bearing
49	31074	Link Belt Collar
50	31075	Link Belt Stamping
51	8288	Snap Ring
52	30058	Cupped Plug
53	32476	Shaft
54	9415106	3/8"-24 Lock Nut
55	32454	Idler Wheel Assy.
56	9413447	*5/16"-18 Lock Nut
57	32701	Rope
57	32702	Clip

*Standard Hardware Items May Be Purchased Locally

For Illustration See Page 10

All prices subject to change without notice.

All replacement parts will be supplied in current production colors or in a neutral color.

ENGINE, ELECTRICAL AND FUEL ELEMENTS

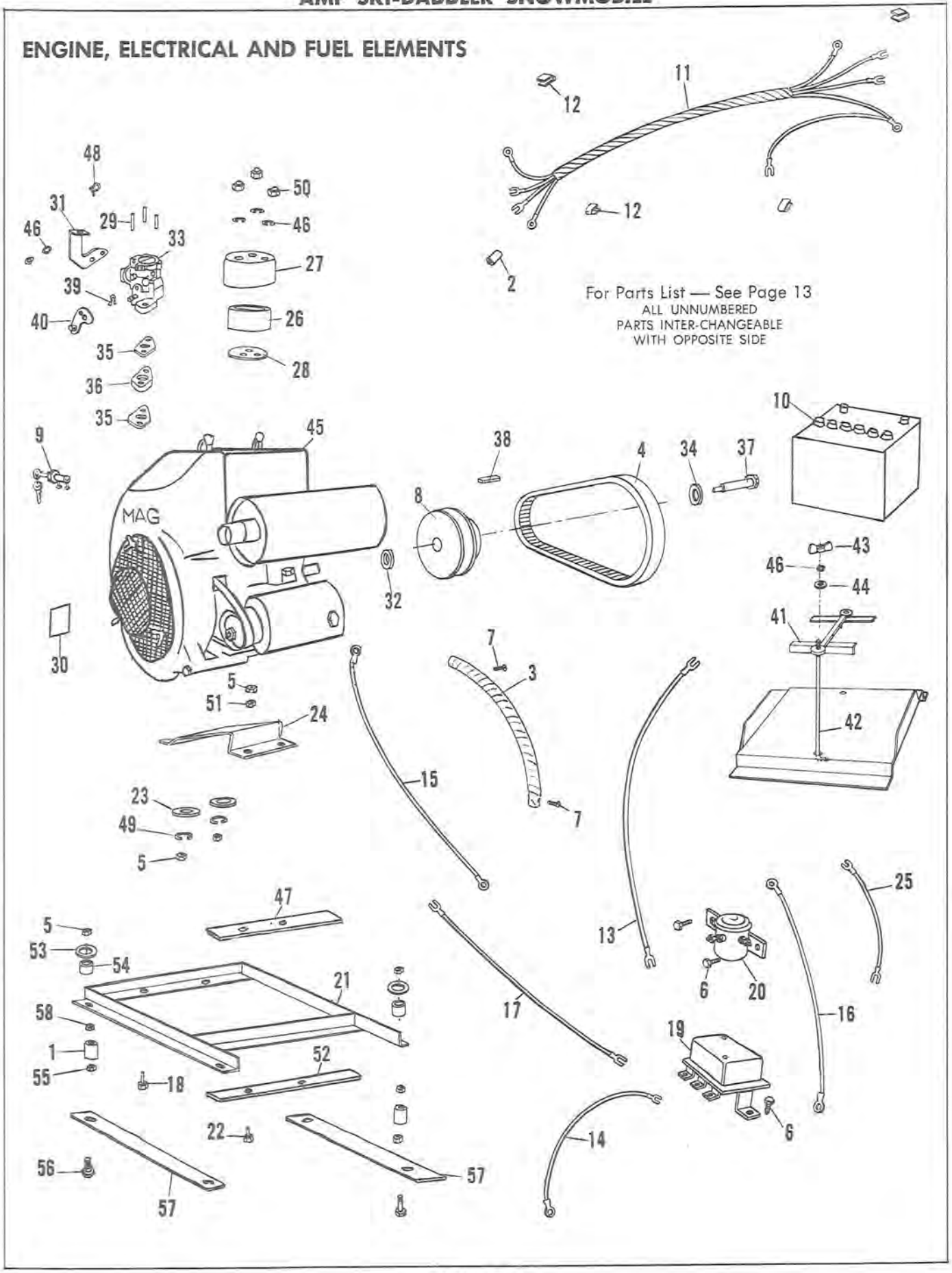

For Parts List — See Page 13
ALL UNNUMBERED
PARTS INTER-CHANGEABLE
WITH OPPOSITE SIDE

FIGURE 4

AMF SKI-DADDLER SNOWMOBILE

ENGINE, ELECTRICAL AND FUEL ELEMENTS

FIGURE 4 PARTS LIST FOR BOTH MODELS

Key No.	Part No.	Description
1	30566	Rubber Engine Mounting Pad
2	29677	Connector
3	30557	Exhaust Pipe
4	30393	Variable Speed Belt
5	9415106	* 3/8 -24 Lock Nut
6	999701	* 1/4 "-20 x 5/8 " Hex Hd. Self Tap Sc.
7	999101	*No. 10-32 x 3/8 " Self Tap Sc.
8	30391	Drive Clutch
9	26032	Key Switch
10	32484	Battery (Purchase Locally)
11	32439	Wiring Harness
12	30389	Wiring Clip
13	30612	Lead Wire (Battery to Solenoid)
14	30614	Lead Wire (Regulator to Ground)
15	30615	Lead Wire (Regulator to Gen.)
16	30616	Lead Wire (Solenoid to Regulator)
17	30617	Lead Wire (Regulator to Generator)
18	181639	3/8 "-24 x 1 1/4 " Hex Hd. Sc.
19	31470	Voltage Regulator (See Engine Manual)
20	3324	Solenoid
21	32446	Engine Base Assy.
22	181643	3/8 "-24 x 1 1/2 " Hex Hd. Sc.
23	446363	* 3/8 " Washer
24	30568	Engine Mount Plate
25	30613	Lead Wire (Battery to Ground)
26	30176	Air Cleaner Screen
27	30178	Air Cleaner Cover
28	20180	Air Cleaner Mount Plate
29	30375	Air Cleaner Stud

Key No.	Part No.	Description
30	16635	Kill Button Decal
31	32499	Anchor Bracket (Throttle Cable)
32	30610	Clutch Spacer
33	30628	Carburetor (Tillotson HR-3A)
34	21970	Washer
35	30676	Intake Manifold Gasket
36	30629	Insulator Block
37	30573	Special Screw
38	30574	1/4 " Square Key
39	119117	*3/32 x 1/2 " Cotter Pin
40	30642	Carburetor Adapter Arm Assy.
41	32483	Battery Hold Down Assy.
42	32481	Battery Hold Down Rod
43	126177	* 1/4 "-20 Wing Nut
44	120386	* 1/4 " Washer
45	Engine	See Footnote Below
46	120380	* 1/4 " Lock Washer
47	32443	Engine Mount Strap (Top)
48	30489	Hose Clamp (Carburetor)
49	120382	* 3/8 " Split Lock Washer
50	995246	1/4 "-20 Acorn Nut
51	124925	3/8 "-24 Jam Nut
52	32442	Engine Mount Strap (Bottom)
53	32535	Washer
54	32699	Pad
55	32532	Nut
56	998045	Special Screw
57	32457	Mounting Plate
58	32528	Bushing

*Standard Hardware Items May Be Purchased Locally

For Illustration See Page 12

All prices subject to change without notice.

All replacement parts will be supplied in current production colors or in a neutral color.

MODEL 880 DRIVE PULLEY

MODEL 5813—ASSEMBLY NO. 30391

Drive Pulley, Complete, 1" Bore

KEY NO.	PART NUMBER	DESCRIPTION	QTY
1	37956	FIXED FACE, HUB AND BRG ASSY	1
	37957	FIXED FACE, HUB AND BRG ASSY	1
2	37958	IDLER TIRE	1
3	37959	WASHER, Thrust	1
4	37960	BEARING, Cup	1
5	37920	BEARING, Movable	1

KEY NO.	PART NUMBER	DESCRIPTION	QTY
6	37961	SPRING, Compression	1
7	37962	BEARING, Outboard slide	1
8	37911	MOVABLE FACE AND TORQUE CUP	1
9	37963	BELL HOUSING ASSEMBLY	1
	37916	REPLACEMENT KIT, Levers	1

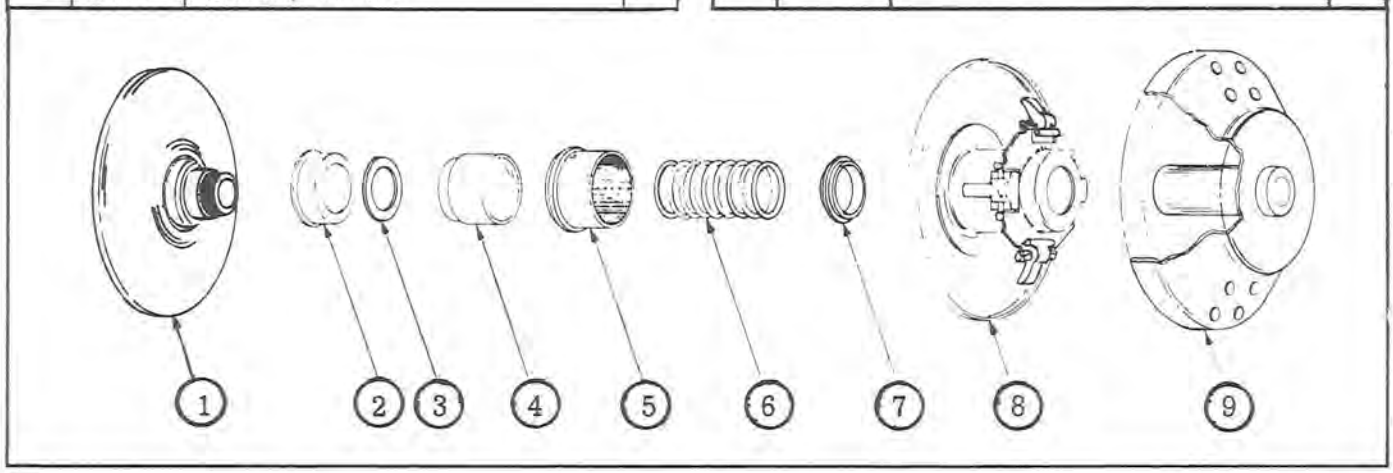

MODEL 880 DRIVEN PULLEY

MODEL 5813

ASSEMBLY NO. 30392

Driven Pulley ¾" bore

KEY NO.	PART NUMBER	DESCRIPTION	QTY
1	37921	FIXED FACE AND HUB ASSEMBLY	1
2	37922	MOVABLE FACE ASSEMBLY	1
3	37964	SPRING	1

KEY NO.	PART NUMBER	DESCRIPTION	QTY
4	37965	SPRING, Cup	1
5	37966	RING, Retaining	1

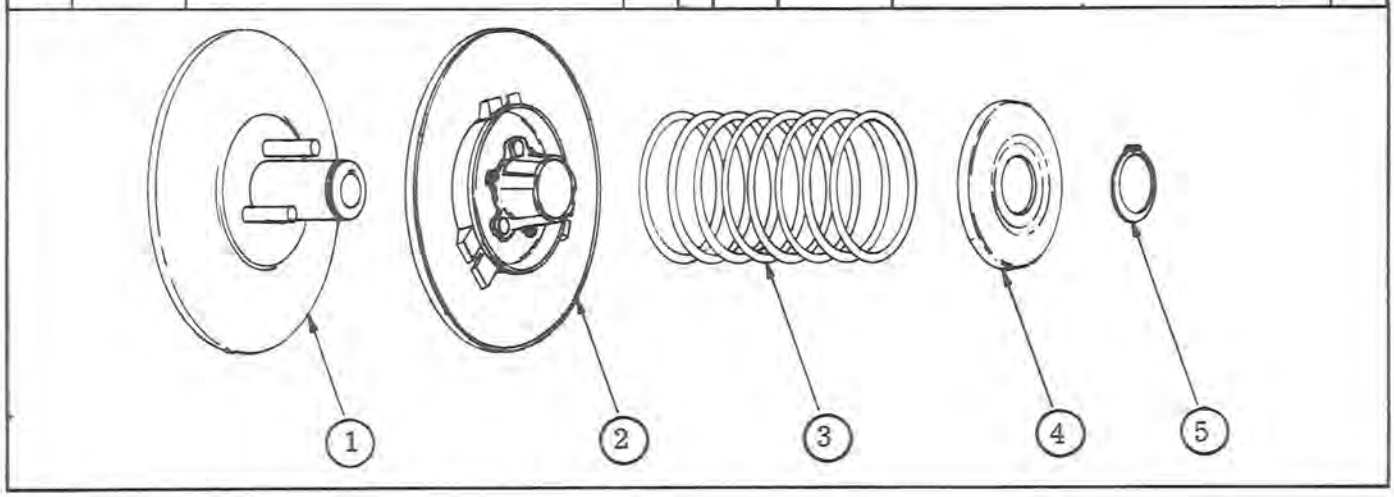

All prices subject to change without notice.

All replacement parts will be supplied in current production colors or in a neutral color.

REVERSING TRANSMISSION
MODEL 2100

Key No.	Part No.	Description
1	32746	Aluminum Case
2	32747	Top Cover
3	31825	Bottom Cover
4	32748	Drive Sprocket
5	32749	Driven Sprocket, 30 Tooth
6	32750	Idler Sprocket
7	32751	Reverse Gear
8	31817	Reverse Pinion
9	32752	Roller Chain
10	32189	Chain Repair Link
11	31823	Input Shaft
12	32753	Output Shaft
13	31818	Reverse Idler Shaft
14	32754	Chain Adjustment
15	32755	Shifter Shaft
16	32756	Taper Bearing Cup & Cone
17	31820	Taper Bearing Sleeve
18	32757	Needle Bearing
19	31847	Bronze Bearing
20	31854	Ball Bearing & Lock Collar
21	31855	Ball Bearing Flanget
22	32758	Gasket, Top Cover
23	32759	Gasket, Bottom Cover
24	32760	Gasket, Flanget
25	32761	"O" Ring, Flanget
26	32762	"O" Ring, Chain Adjustment
27	32763	Seal, Input Shaft

Key No.	Part No.	Description
28	32764	Seal, Shifter Shaft
29	31843	Dust Cover for Taper Bearing
30	32765	Shift Lever
31	31827	Shifter Lever Fulcrum
32	31852	Shifter Lever Knob
33	32766	Shifter Shoe
34	32767	Clip, Chain Adjustment
35	31836	Input Shaft Collar
36	31835	Output Shaft Spacer Collar
37	31857	5/16" Lock Washer
38	32768	3/8" Lock Washer
39	31828	Axle Thrust Washer
40	31848	Set Screw
41	31839	5/16" Hex Nut
42	31851	5/16" Stud
43	32769	3/8" Stud
44	31858	3/8" Bolt
45	31860	1/4" Bolt
46	32770	Oil Plug
47	31859	1/8" x 1/2" Roll Pin
48	32771	1/8" x 3/4" Roll Pin
49	31849	1/8" x 1" Roll Pin
50	31856	5/16" Detent Ball
51	31838	5/16" Detent Spring
52	31844	Expansion Plug
53	31840	"E" Ring—1/2"
54	31841	"E" Ring—5/8"

All prices subject to change without notice.

All replacement parts will be supplied in current production colors or in a neutral color.

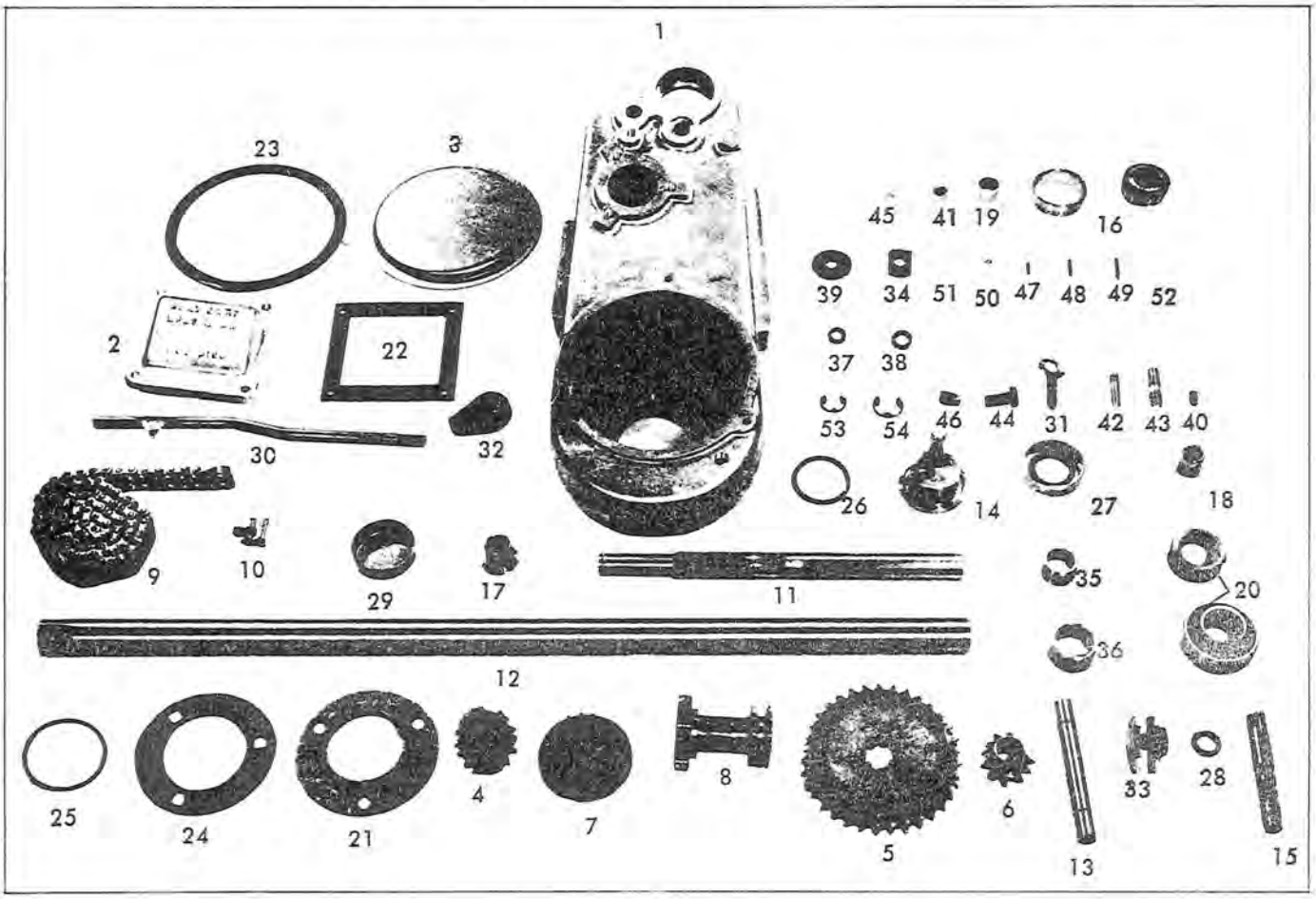

BLOCK AND HOOD

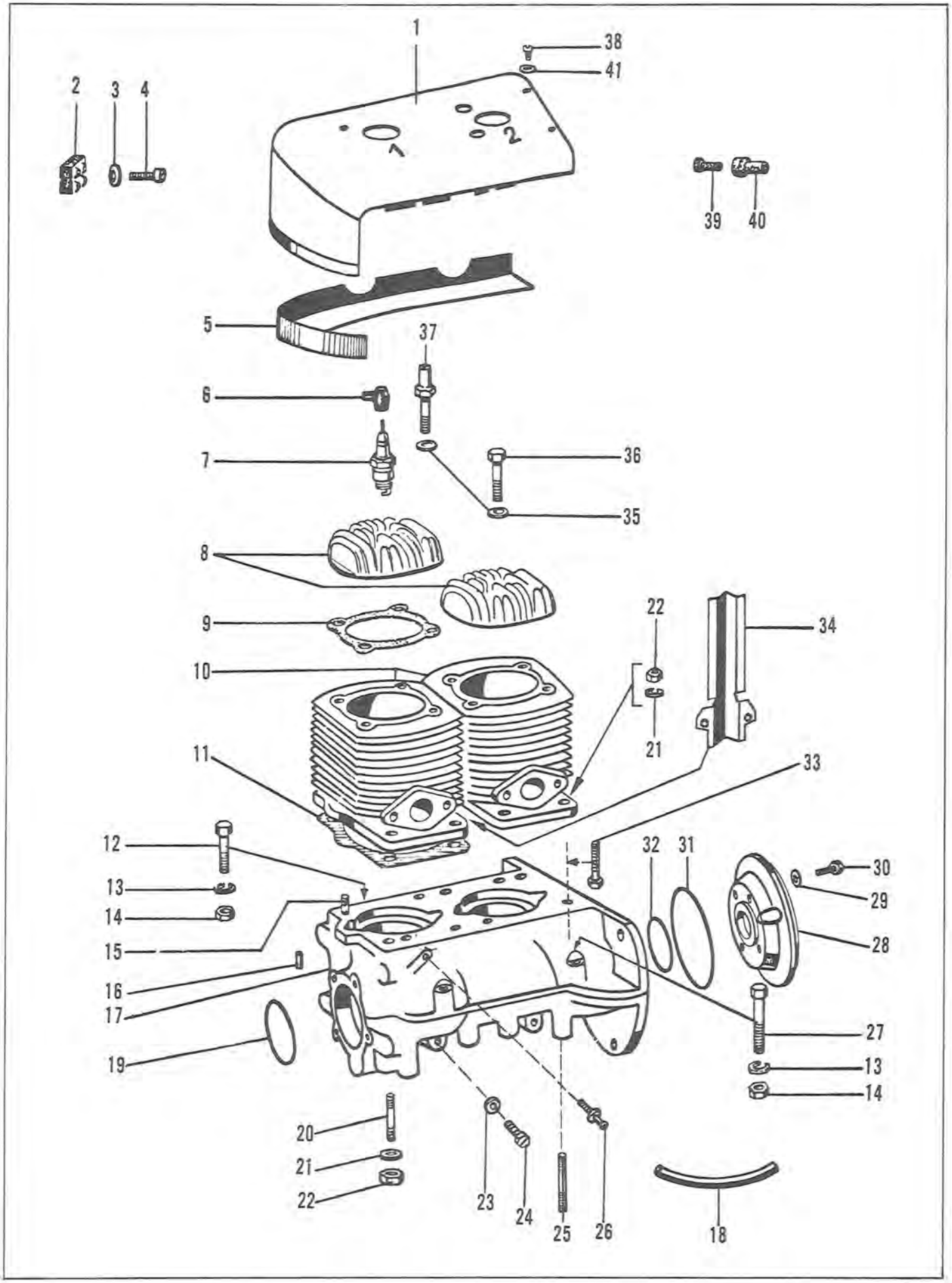

BLOCK AND HOOD PARTS LIST

ENGINE TYPE 2054-SRB x 18 (AMF)

ITEM	PART NUMBER	DESCRIPTION	QTY
1	549x398	COVER, Air shroud	1
2	EAZ102B	CLAMP, Groundwire	1
3	884x7	WASHER, Insulating	1
4	DIN84-5S M3x15	SCREW, Connection clamp	1
5	549x399	SHIELD, Cylinder	1
6	836x43	TERMINAL, Ignition cable	2
7	50x39	SPARK PLUG, BOSCH M225-T1	2
8	1712x142	CYLINDER HEAD	2
9	759x181	GASKET, Cylinder head	2
10	205x178	CYLINDER	2
11	759x183	GASKET, Cylinder base	2
12	DIN931-5S M8x65	SCREW, Crankcase	1
13	DIN137 A8	LOCKWASHER	4
14	DIN934-5S M8	NUT, Crankcase	4
15	DIN835-5S M10x22	STUD, Cylinder	2
16	9244x159	CRANKCASE ASSEMBLY	1
17	343x135	ROLL PIN	2
18	318x340	IMPULSE TUBE	1
19	73x218	O-RING, Crankcase	1
20	DIN835-5S M10x70	STUD, Crankcase	2
21	DIN137 A10	LOCKWASHER	10
22	DIN934-5S M10	NUT, Crankcase and cylinder	10
23	DIN7603 A8x11,5	WASHER, Drain plug	2
24	DIN933-5D M8x158SZ	DRAIN PLUG, Crankcase	2
25	954x87	STUD, Crankcase mounting	4
26	222x366	STRAIGHT FITTING, Fuel pump	1
27	DIN931-5S M8x60	SCREW, Crankcase	3
28	582x33	PLATE, Main bearing, flywheel end	1
29	DIN137 A8	LOCKWASHER	4
30	DIN931-5D M8x20	SCREW, Main bearing plate	4
31	73x219	O-RING, Crankcase	1
32	73x217	O-RING, Crankcase	1
33	DIN931-5S M10x160	SCREW, Crankcase	6
34	548x385	AIR GUIDE	1
35	DIN125 10,5	WASHER, Plain, cylinder head	8
36	DIN931-8G M10x45	SCREW, Cylinder head	7
37	819x77	SCREW, Air shroud cover	1
38	DIN84-5S M6x10	SCREW, Air shroud	7
39	813x62	RUBBER NIPPLE, Groundwire	1
40	813-H	RUBBER NIPPLE, Ignition cable	3
41	DIN433-St 6,4	WASHER, Plain	7

FLY WHEEL AND MAGNETO

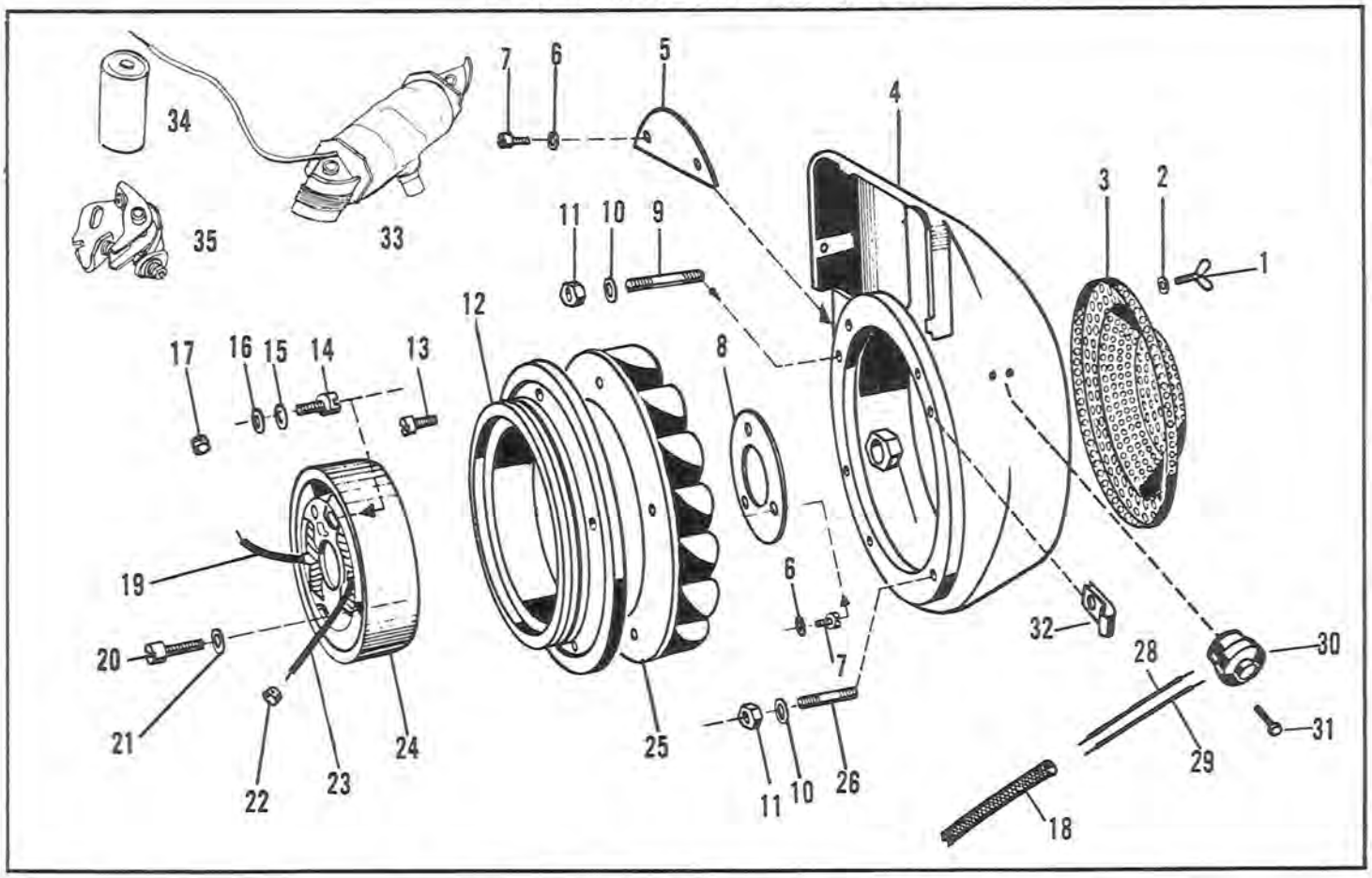

FLY WHEEL AND MAGNETO PARTS LIST

ENGINE TYPE 2054-SRB x 18 (AMF)

ITEM	PART NUMBER	DESCRIPTION	QTY
1	DIN316-4D M8x15	SCREW, Screen mounting	3
2	DIN433-St 8,4	WASHER, Plain	3
3	82x127	SCREEN, Cooling air intake	1
4	549x397	AIR SHROUD	1
5	810x278	COVER, Air shroud	1
6	DIN137 A6	LOCKWASHER	5
7	DIN933-5D M6x12	SCREW, Air shroud cover	5
8	287x32	COVER, Breaker	1
9	954x86	STUD, Air shroud	1
10	DIN137 A8	LOCKWASHER	5
11	DIN934-5S M8	NUT, Air shroud	5
12	583x241	FLYWHEEL	1
13	DIN7976 Bz 4,8x19	SCREW, Fan mounting	6
14	DIN84-5S M5x15	SCREW, Armature plate	2
15	DIN137 A5	LOCKWASHER	2
16	DIN433 St 5,3x10	WASHER, Plain	2
17	787x161	BUSHING, Ignition cable 2	1
18	143x160	SHEATH, Insulating	1

ITEM	PART NUMBER	DESCRIPTION	QTY
19	141x234	IGNITION CABLE, Cylinder 2	1
20	DIN84-5S M6x12	SCREW, Flywheel magneto	4
21	DIN137 A6	LOCKWASHER	4
22	787x160	BUSHING, Ignition cable 1	1
23	141x235	IGNITION CABLE, Cylinder 1	1
24	9281x134	FLYWHEEL MAGNETO ASSEMBLY	1
25	547x6	FAN	1
26	DIN835-5D M8x15	STUD, Air shroud	4
27	209x82	NUT, Flywheel mounting	1
28	141x237	WIRE, Stop button	1
29	141x238	WIRE, Stop button	1
30	9367x24	STOP BUTTON	1
31	DIN933-5S M3x8	SCREW, Stop button	2
32	929x179	CLIP, Insulating sheath	1
33	204 211 005	IGNITION COIL	2
34	237 330 037	CONDENSER	1
35	217 013 006	CONTACTS, Set of	1

CRANKSHAFT

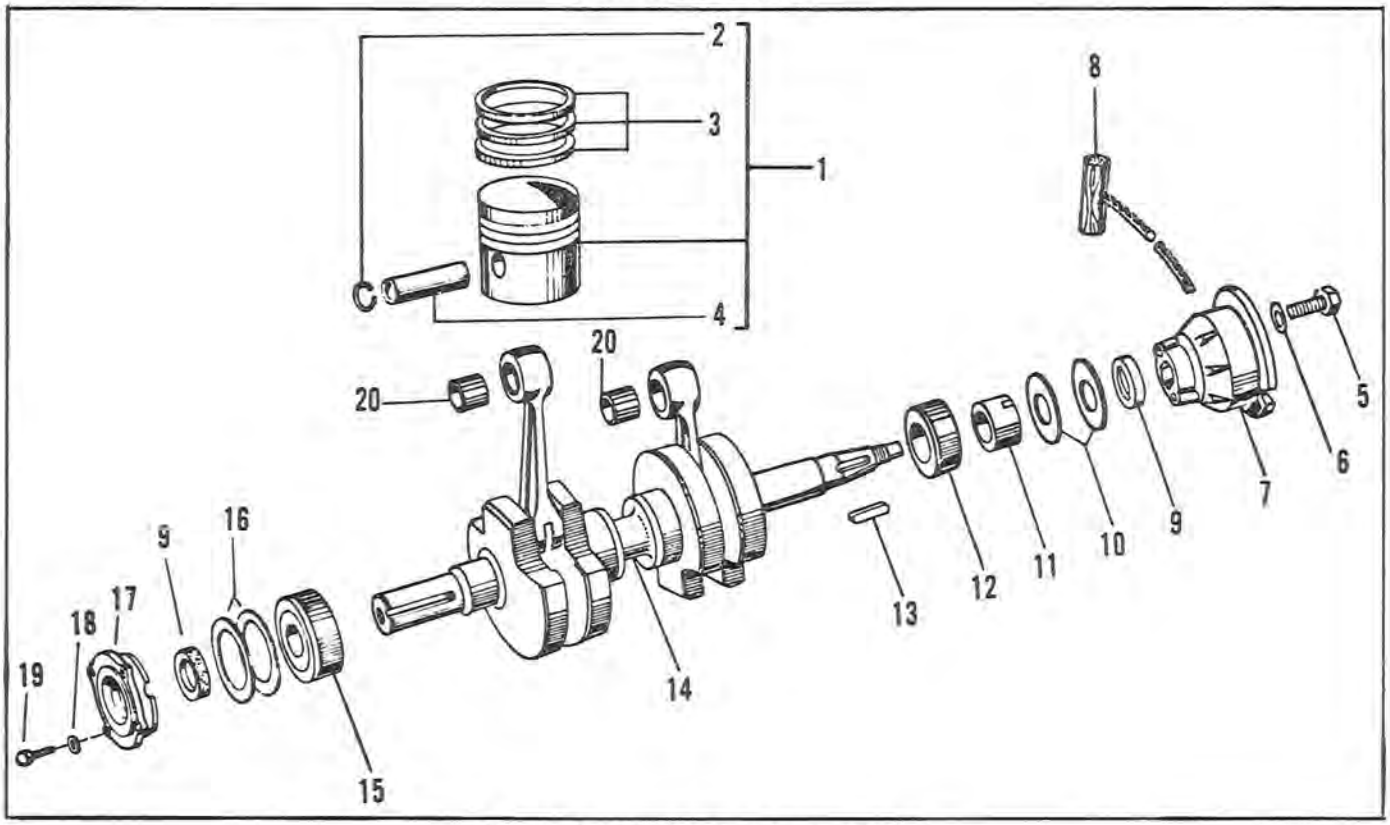

CRANKSHAFT PARTS LIST

ENGINE TYPE 2054-SRB x 18 (AMF)

ITEM	PART NUMBER	DESCRIPTION	QTY
1	9020x29	PISTON ASSEMBLY, Standard	2
	9020x29-R1	PISTON ASSEMBLY, 0,25 MM OS	2
	9020x29-R2	PISTON ASSEMBLY, 0,50 MM OS	2
	9020x29-R3	PISTON ASSEMBLY, 0,75 MM OS	2
	9020x29-R4	PISTON ASSEMBLY, 1,00 MM OS	2
2	DIN73123-B20	RETAINING RING, Piston pin	4
3	240x125	PISTON RING, Standard	6
	240x125-R1	PISTON RING, 0,25 MM OS	6
	240x125-R2	PISTON RING, 0,50 MM OS	6
	240x125-R3	PISTON RING, 0,75 MM OS	6
	240x125-R4	PISTON RING, 1,00 MM OS	6
4	DIN73121-K D20x14 x60	PISTON PIN	2
5	DIN931-5D M8x40	SCREW, Rope starter sheave	2
6	DIN137 A8	LOCKWASHER	2
7	334x92	SHEAVE, Rope starter	1
8	9002x10	STARTING ROPE ASSEMBLY	1
9	9493x80	OIL SEAL, Crankshaft, TO and flywheel end	2
10	321x39	THRUST WASHER, Main bearing flywheel end	2
11	1212-202-109	CAM, Breaker contacts	1
12	9341x144	MAIN BEARING, Flywheel end	1
13	DIN6885 St A5x5 x30	KEY, Can and flywheel	1
14	9090x72	CRANKSHAFT ASSEMBLY	1
15	9341x66	MAIN BEARING, TO end	1
16	321x143	THRUST WASHER, Main bearing TO end	1
17	1652x180	PLATE, Main bearing, TO end	1
18	DIN137 A8	LOCKWASHER	4
19	DIN931-5D M8x20	SCREW, Main bearing plate	4
20	732x80	BUSHING, Piston pin	2

GENERATOR AND VOLTAGE REGULATOR

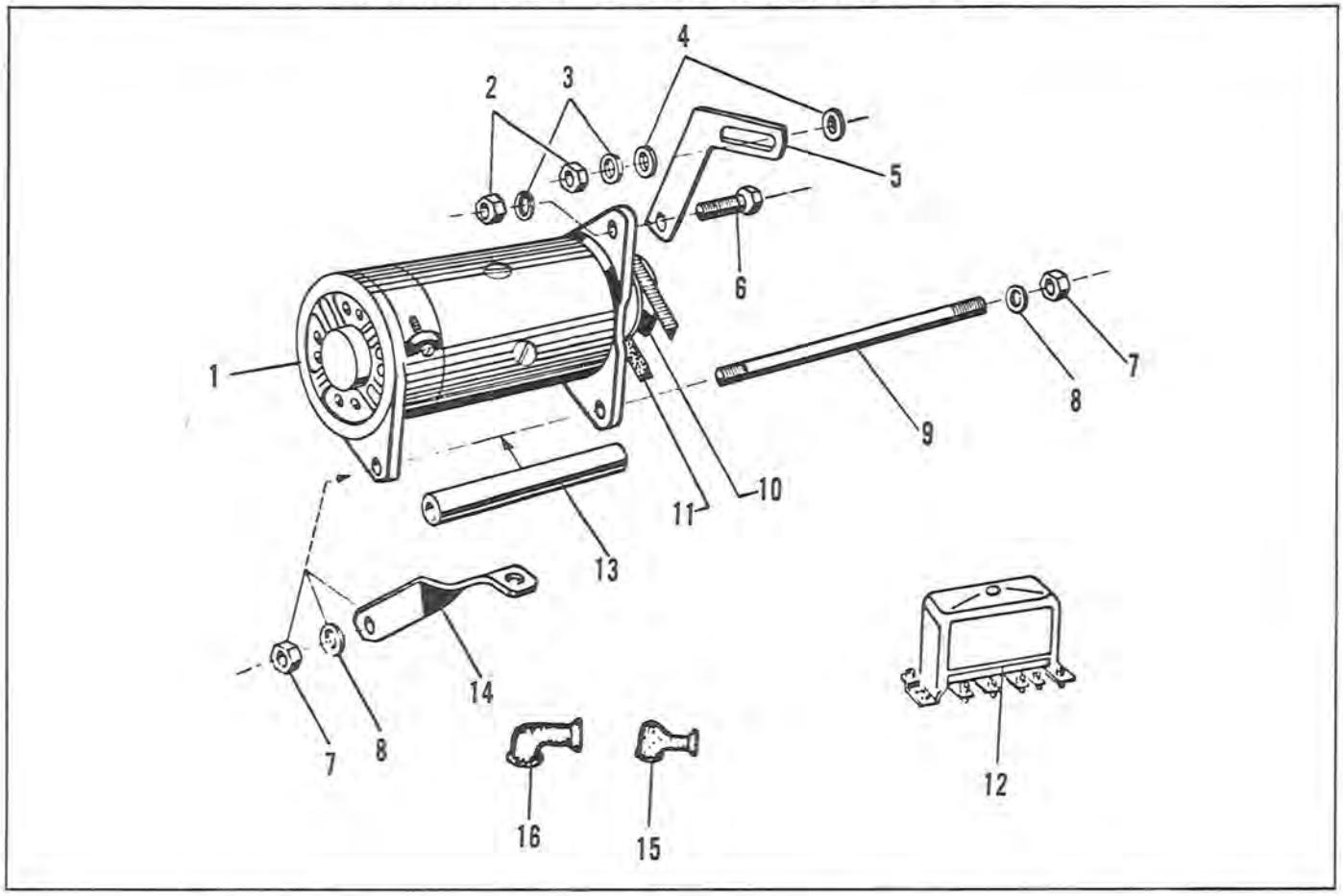

GENERATOR AND VOLTAGE REGULATOR PARTS LIST

ENGINE TYPE 2054-SRB x 18 (AMF)

ITEM	PART NUMBER	DESCRIPTION	QTY
1	928x113	STARTER GENERATOR ASSEMBLY	1
2	DIN934-5S M8	NUT, Adjusting strap	2
3	DIN137 A8	LOCKWASHER	2
4	DIN125 8,4	WASHER, Plain	2
5	1552x603	STRAP, Starter generator belt adjustment	1
6	DIN933-5D M8x25	SCREW, Adjusting strap	1
7	DIN934-5S M10	NUT, Starter generator	2
8	DIN137 A10	LOCKWASHER	2
9	112x93	STUD, Starter generator	1
10	221x149	DRIVEN PULLEY, Starter generator	1
11	332x52	BELT, Starter generator	1
12	9448x34	VOLTAGE REGULATOR ASSEMBLY	1
13	889x215	SPACER, Starter generator	1
14	1552x604	SUPPORT BRACKET, Starter	1
15	813x49	RUBBER HOOD, Cable terminal	2
16	813x63	RUBBER HOOD, Cable terminal	1

MANIFOLD AND MUFFLER

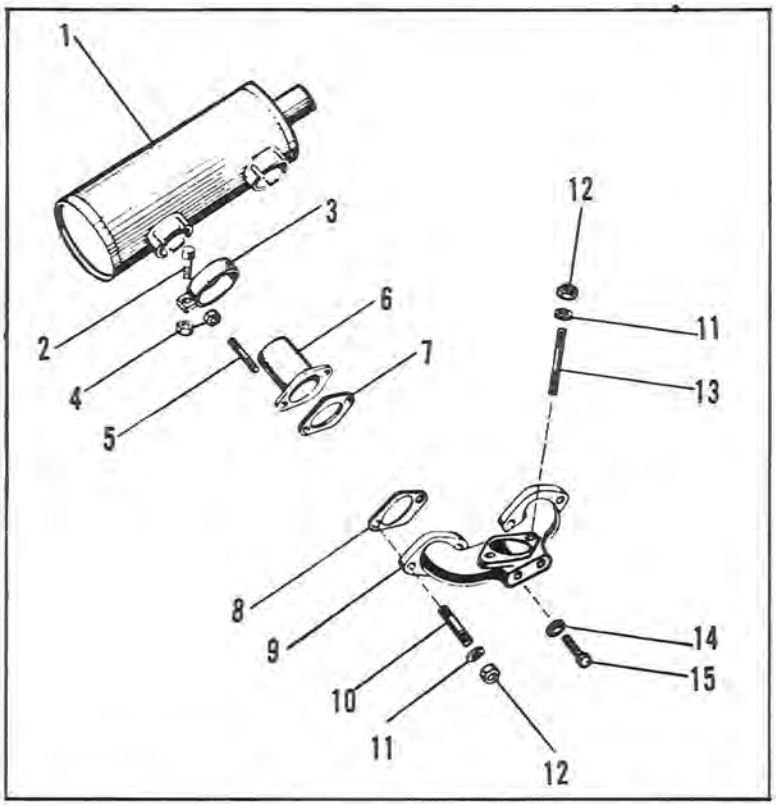

MANIFOLD AND MUFFLER PARTS LIST

ENGINE TYPE 2054-SRB x 18 (AMF)

ITEM	PART NUMBER	DESCRIPTION	QTY
1	9003x484	MUFFLER	1
2	DIN933-5D M8x25	SCREW, Muffler strap	2
3	929x246	STRAP, Muffler	2
4	DIN934-M8 Liaton	NUT, Muffler strap	6
5	DIN939-5D M8x18	STUD, Exhaust pipe	4
6	9003x485	PIPE NIPPLE, Muffler	2
7	759x182	GASKET, Muffler pipe nipple	2
8	73x142	GASKET, Intake manifold	2
9	903x301	INTAKE MANIFOLD	1
10	DIN939-5D M8x25	STUD, Intake manifold	4
11	DIN137 A8	LOCKWASHER	6
12	DIN934-5S M8	NUT, Intake manifold	6
13	DIN939-5D M8x22	STUD, Intake manifold	2
14	DIN137 A6	LOCKWASHER	2
15	DIN933-5S M6x15	SCREW, Carburetor support	2

CARBURETOR—MODEL 5813

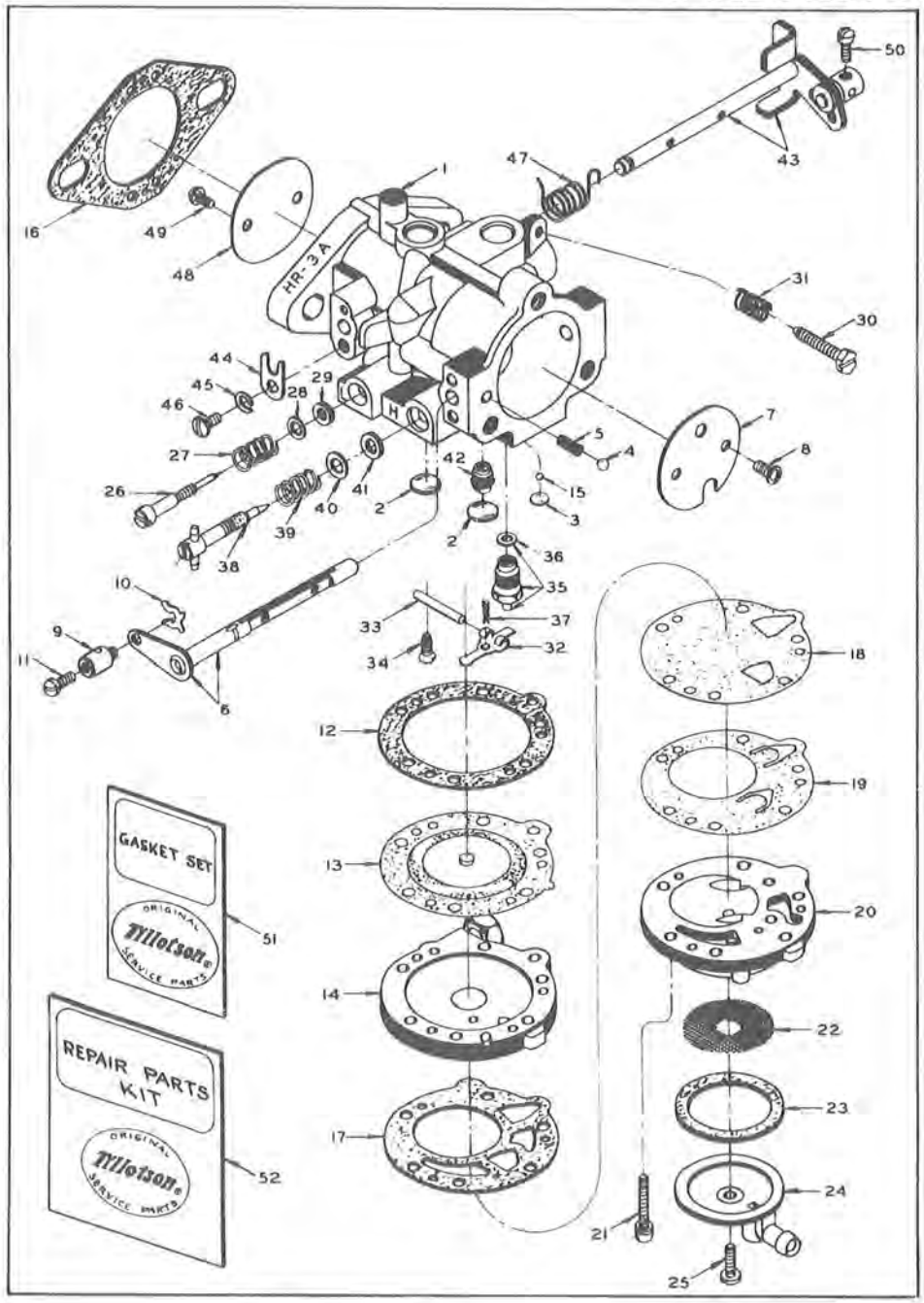

NOTICE: Parts listed on this page available from--Tillotson Mfg. Co--Parts & Service Division--761-69 Berdan Ave.--Toledo, Ohio--or through any Authorized Tillotson Service Outlet.

Ref. No.	HR-3A Part No.	Part Name
1	014387	Body (Service)
2	02531	* Body Channel Welch Plug (2)
3	013737	* Body Channel Welch Plug
4	04784	Choke Friction Ball
5	08805	Choke Friction Spring
6	014359	Choke Shaft & Lever
7	014356	Choke Shutter
8	08942	Choke Shutter Screw & Lockwasher (2)
9	010393	Choke Wire Connection
10	010392	Choke Wire Connection Ret. Clip
11	058	* Choke Wire Ret. Screw
12	012473	Diaphragm Gasket
13	012475	* Diaphragm
14	014402	Diaphragm Cover
15	05322	Economiser Check Ball
16	014319	Flange Gasket
17	012930	Fuel Pump Gasket
18	014230	* Fuel Pump Diaphragm (Pulse)
19	014229	* Fuel Pump Diaphragm (Valve)
20	013335	Fuel Pump Body
21	010098	Fuel Pump Body Screw & Lockwasaer (6)
22	010530	* Fuel Strainer Screen
23	010529	Fuel Strainer Cover Gasket
24	010527	Fuel Strainer Cover
25	010571	* Fuel Strainer Cover Ret. Screw
26	014321	* Idle Mixture Screw
27	08793	* Idle Mixture Screw Spring
28	011428	Idle Mixture Screw Washer
29	011401	Idle Mixture Screw Packing
30	014326	* Idle Speed Screw
31	0788	* Idle Speed Screw Spring
32	010513	* Inlet Control Lever
33	013406	* Inlet Control Lever Fulcrum Pin
34	013269	* Inlet Control Lever Fulcrum Pin Ret. Screw
35	013546	* Inlet Needle, Seat & Gasket
36	010165	Inlet Seat Gasket
37	013434	* Inlet Tension Spring
38	014323	* High Speed Mixture Screw
39	011103	* High Speed Mixture Screw Spring
40	03114	High Speed Mixture Screw Washer
41	010511	High Speed Mixture Screw Packing
42	014334	* Nozzle Check Valve
43	014361	Throttle Shaft & Lever
44	09678	Throttle Shaft Clip
45	0992	Throttle Shaft Clip Lockwasher
46	01974	Throttle Shaft Clip Ret. Screw
47	014324	* Throttle Shaft Return Spring
48	014320	Throttle Shutter
49	08942	* Throttle Shutter Screw & Lockwasher (2)
50	012305	* Throttle Wire Ret. Screw
51	GS-199	* Gasket & Packing Set
52	RK-756	Repair Parts Kit

(*) Indicates contents of Repair Parts Kit

ENGINE OPERATING INSTRUCTIONS

FOR ENGINE TYPE 2054-SRB x 18

A) Do not start this engine until you have carefully read the instructions on operating the engine.

1. Fill fuel tank with correct fuel mixture

The MAG engine type 2054-SRB is a 2-stroke engine which runs using a GASOLINE-OIL MIXTURE.

During the period of "RUNNING-IN", that means for a period of about 40 HOURS, a gasoline-oil mixture which contains 5% oil, should be used. After this period the proportion of oil should be 4%.

2. Starting procedure

a) Set throttle about 1/2 open

b) Set choke control into position closed

c) Start the engine by operating the starting switch

d) After engine starts, open choke fully. Less choking is necessary in warm weather or when engine is warm than when it is cold. Should flooding occur, open choke fully and continue starting.

3. Warm-up period

When starting a gasoline engine, the engine should be allowed to warm up to operating temperature, before the load is applied. This requires only a few minutes of running at moderate speed. Racing an engine or gunning it, to hurry the warm-up period, is very destructive to the polished wearing surfaces on pistons, rings, cylinders, bearings, etc.

4. Running-in period

The various wearing surfaces on pistons, rings, cylinders, bearings, etc., in a new engine have not been glazed, as they will be with continued operation, and it is in this period of "RUNNING-IN" that special care must be exercised, otherwise the highly desired glaze will not be obtained. A new wearing surface that has once been damaged by carelessness will be ruined forever. Therefore, operate the engine at light loads for a period totaling about 40 HOURS, before maximum load is applied. This will greatly increase engine life.

5. Stop the engine

a) Set throttle into idle position.

b) Press stop switch and hold it down until engine stops.

B) Safety precautions

1. Precaution is the best insurance against an accident.

2. Never fill fuel tank while engine is in operation, to avoid the possibility of spilled fuel causing a fire.

3. Never operate engine in a closed building unless the exhaust is piped outside. This exhaust contains carbon monoxide, a poisonous, odorless and invisible gas, which if breathed causes serious illness and possible death.

4. Keep engine clean. This engine is air-cooled. If cooling system becomes clogged, serious damage may result. Therefore, keep the blower screen free from dirt.

C) Maintenance adjustments

1. After the first 20 hours of running

a) Tighten cylinder head screws to 32 foot pounds torque.

b) Tighten fixing nuts and screws for the main parts as follows:

- Screws and nuts for crankcase (M8 thread) = 18 foot pounds
- Screws and nuts for crankcase (M10 thread) = 32 foot pounds
- Nuts for intake manifold = 18 foot pounds
- Nuts for exhaust pipe = 18 foot pounds
- Nuts for air shroud = 18 foot pounds
- Nuts for carburetor = 18 foot pounds
- Nuts for cylinder = 32 foot pounds
- Nuts and screws for starter generator = 18 foot pounds

c) Check the tension of the starter generator belt and if necessary adjust it.

2. Every 100 hours of running

a) Check the spark plugs. The spark plug gap should be twenty thousandths (.020) of an inch, and plugs should be kept clean both inside and out. If the porcelain insulator is cracked, replace with a new plug of correct heat range, like BOSCH M225-T1, or equal. The thread is 18 millimeters. When mounting either old or new plug thoroughly clean threads in cylinder heads before installation.

b) Clean the blower screen if dirty.

c) Adjust the starter generator belt if it is too unbended.

3. Every 200 hours of running

a) Repeat procedures as mentioned under paragraph 2, a, b, c, d, (Every 100 hours of running).

b) Breaker points adjustments

Magnetos are properly adjusted and timed before leaving the factory. The breaker point gap of BOSCH type 0204402001 should have an opening of .015 inch at full separation. If the spark becomes weak after continued operation, it may be necessary to re-adjust the breaker points. To do this first remove the cover on the magneto.

c) Check carbon brush. Check dynamo if it is worn out and replace if necessary.

d) Removing of the oil carbon

Carbon oil is set up at the places as follows - due to the burning of the added lubrication oil in the fuel:

- in the cylinder head
- on the piston head
- in the exhaust pipe
- in the transfer part
- in the exhaust silencer

D) TROUBLES CAUSES AND REMEDIES

1. Three prime requisites are essential to starting and maintaining satisfactory operation of gasoline engines. They are:

- a proper fuel mixture in the cylinder
- good compression in the cylinder
- good spark, properly timed, to ignite the mixture

If all three of these conditions do not exist, the engine cannot be started.

As a guide to locating any difficulties which might arise, the following causes are listed under the three headings: Fuel Mixture, Compression and Ignition.

In each case the causes of trouble are given in the order in which they are most apt to occur. In many cases the remedy is apparent, and in such cases no further remedies are suggested.

2. Starting difficulties / Fuel mixture

- No fuel in tank.
- Fuel pump diaphragm worn out, so pump does not apply carburetor with fuel.
- Fuel pump diaphragm worn out, so pump does not supply carburetor with fuel.
- Carburetor not choked sufficiently, especially if engine is cold.
- Water, dirt, or gum in gasoline interfering with free flow of fuel to carburetor.
- Poor grade or stale gasoline that will not vaporize sufficiently to form the proper fuel mixture.
- Carburetor flooded, caused by too much choking especially if engine is hot.

3. Compression

- If the engine has proper compression, considerable resistance will be encountered in the pull on the starting sheave. If this resistance is not encountered, compression is faulty. Following are some reasons for poor compression:
- Cylinder dry due to engine having been out of use for some time.
- Loose spark plug or broken spark plug. In this case a hissing noise will be heard in cranking engine due to escaping gas mixture on compression stroke.
- Damaged cylinder head gasket or loose cylinder head. This will likewise cause hissing noise on compression stroke.
- Piston rings stuck in piston due to carbon accumulation. If rings are stuck very tight this will necessitate removing pistons.

  Scored cylinder. This will require reboring of the cylinder and fitting with new piston and rings. If scored too severely an entirely new cylinder may be necessary.

4. Ignition

- Ignition cable disconnected from magneto, coil, or spark plug.
- Broken ignition cables, causing short circuits.
- Ignition cable wet or oil soaked.
- Spark plug insulator broken.
- Spark plug wet or dirty.
- Spark plug point gap wrong.
- Condensation on spark plug electrodes.
- Magneto breaker points pitted or fused.
- Magneto breaker arm sticking.
- Magneto condenser leaking or grounded.
- Spark timing wrong. Correct timing .140-.160 before T.D.C.

5. Engine misses

- Spark plug gap incorrect.
- Worn and leaking ignition cable.
- Weak spark.
- Loose connections at ignition cable.
- Magneto breaker points pitted or worn.
- Water in gasoline.

- Poor compression.

6. Engine stops
   - Fuel tank empty.
   - Water, dirt or gum in gasoline.
   - Gasoline vaporized in fuel lines due to excessive heat around engine.
   - Air vent hole in fuel tank cap plugged. Engine scored or stuck due to lack of oil.

WARRANTY FLAT RATE LABOR SCHEDULE

MODEL 5813

1.	Install shift kit in gear case	3 Hours
2.	Remove and replace chain	1 Hour
3.	Remove and replace driven clutch	$\frac{1}{2}$ Hour
4.	Remove and replace driving clutch	$\frac{1}{2}$ Hour
5.	Remove and replace engine mount base	2 Hours
6.	Remove and replace rubber drive sprockets (drive shaft)	3 Hours
7.	Remove and replace traction belt	$1\frac{1}{2}$ Hours
8.	Remove and replace idler shaft or bearing	1 Hour
9.	Remove and replace rear support arms	1 Hour
10.	Remove and replace fuel tank	5 Hours
11.	Remove and replace rear seat support	1 Hour
12.	Remove and replace hood	2 Hours
13.	Remove and replace throttle cable	$\frac{1}{2}$ Hour
14.	Remove and replace brake cable	$\frac{1}{2}$ Hour
15.	Remove and replace steering spindle	$\frac{1}{2}$ Hour
16.	Remove and replace boggie support and/or bearing	$\frac{1}{2}$ Hour