3

SACHS

Repair Instructions No. 4072.8 E

SACHS SA 2-440

Snowmobile Engine

Edition December 1970

FICHTEL & SACHS AG · D-8720 SCHWEINFURT

CONTENTS

INTRODUCTION

This manual is designed to give dealers and their staff all guidance and information necessary to enable them to provide and efficient repair and maintenance service, but it is in no way intended as a substitute for the practical and theoretical training available to personnel at our Service Training School.

It will be found useful as a ready reference in day-to-day workshop practice.

Our illustrated Spare Parts List, which shows the various components in detail, will also be found helpful when used in conjunction with this booklet.

Naturally, good maintenance and repair work and efficient servicing call for good equipment, a well-equipped workshop and skilled personnel.

Dealers are requested to make this manual and all SACHS Service Bulletins, which contain technical modifications, available to every individual responsible for actual servicing. The proper place for this kind of technical information is in the workshop and not in the filing cabinet.

We hope that this manual will be of real practical assistance to all our dealers, agents and associates.

FICHTEL & SACHS AG
D-8720 SCHWEINFURT
Service Department

INSTALLATION DIMENSIONS

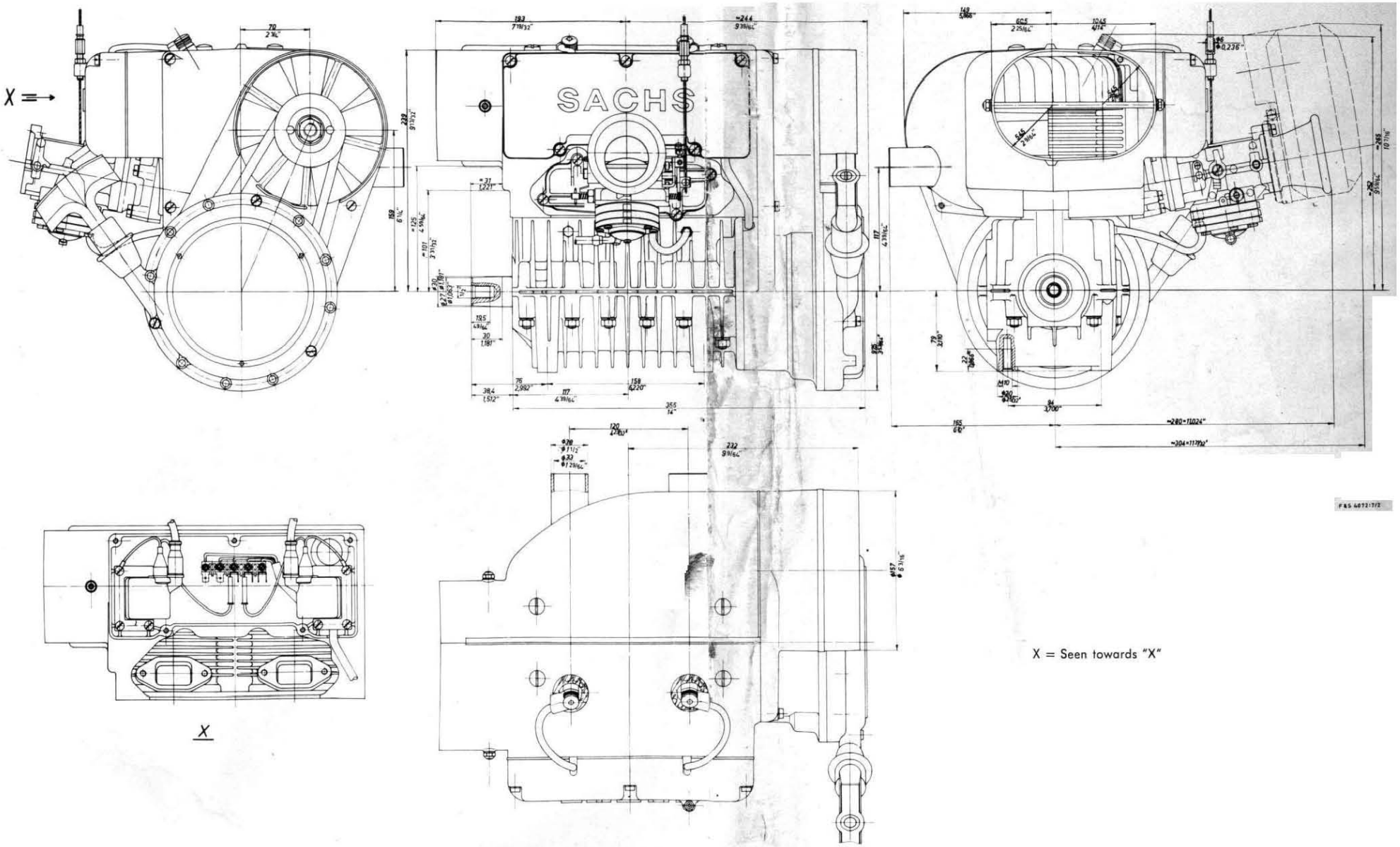

X = Seen towards "X"

In the interest of technical progress we reserve the right to introduce modifications without notice.

TECHNICAL DATA

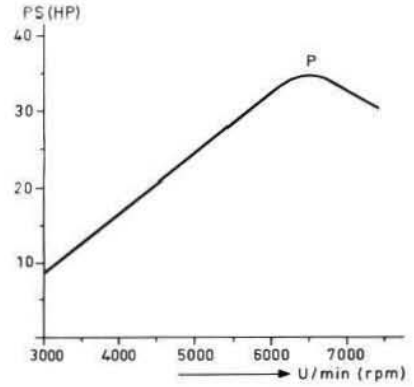

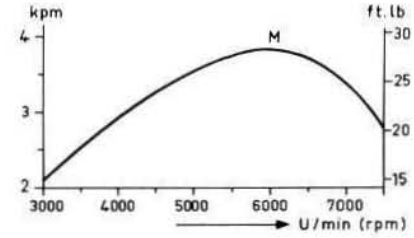

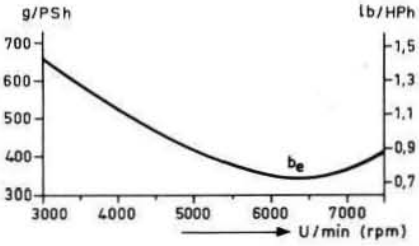

The stated power output applies to a fully run-in engine and is measured at a barometric pressure of b_o = 760 mm Hg and at an air temperature of t_L = 20°C (68°F), with a tolerance of ± 5%.

For determining the power output according to German Standard DIN 6270 (b_o = 736 mm Hg and t_L = 20°C), the above output has to be multiplied by the correction factor 0.97.

In the interest of technical progress we reserve the right to introduce modifications without notice.

Technical data

Type:	Two-cylinder two-cycle gasoline engine
Cooling:	Fan-type air cooling
Direction of rotation of engine:	Anticlockwise (seen on crankshaft p. t. o. side)
Capacity:	437 cc (26.646 cu. in.)
Bore:	ϕ 67.5 mm (2.657 in.)
Stroke:	61 mm (2.402 in.)
Compression ratio:	9.3 to 1
Output:	35 HP (DIN) at 6500 rpm
Crankshaft bearings:	4 anti-friction bearings
Engine lubrication:	Oil-in-gasoline lubrication, gasoline/oil ratio 25 : 1
Ignition:	BOSCH magneto generator 12 V 75 W or 40 W
Ignition timing:	Stopped engine: 0.25...0.30 mm before TDC (0.0098...0.0118 in.) Running engine: 3.50...4.00 mm before TDC (0.1378...0.1575 in.)
Contact breaker gap:	0.4 ± 0.05 mm (0.016 ± 0.002 in.)
Pole shoe gap:	Stopped engine: 25...29 mm (0.9843...1.1417 in.) Running engine: 7...11 mm (0.2756...0.4331 in.)
Spark plug:	BOSCH W 260 T 2 or W 240 T 1 (see note on page 24)
Carburettor:	TILLOTSON diaphragm carburettor HD 13 1½" (ϕ 38.10 mm)
Carburettor setting:	Main jet: 1¼ turns open Idling jet: 1 turn open
Air intake:	via 1 intake stack
Starting method:	Recoil starter on request BOSCH Bendix-pinion type electric starter 12 V – 0.4 HP (necessary battery 12 V 32...38 Ah)
Exhaust pipe:	Exhaust manifold (F & S part no. 3673 003 001) and intermediate pipe 42 mm (1.654 in.) I. D., length 150 mm (5.906 in.) (not supplied by F & S)
Exhaust muffler:	Swirl type (F & S part no. 1473 019 001)

REPAIR TOOLS AND ASSEMBLY JIG

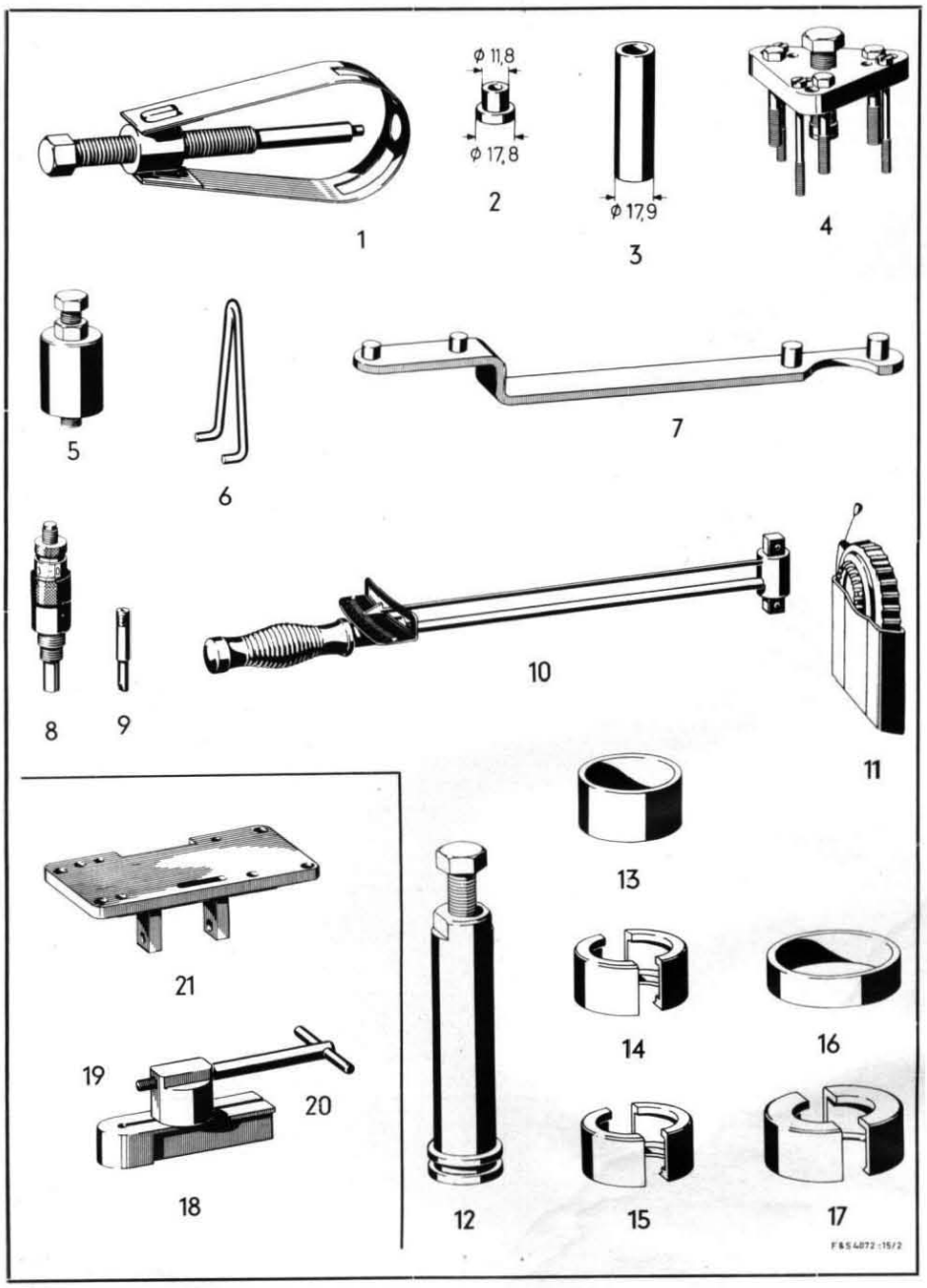

Illustr. No.	Part No.	Denomination
		Repair tools
1	0276 065 101	Gudgeon pin extractor
2	0977 069 000	Insert for gudgeon pin extractor
3	0977 068 000	Locating pin for piston
4	3676 004 001	Withdrawal tool
5	3676 005 000	Fitting tool for flanged hub
6	3676 002 000	Retaining fork
7	0976 111 100	Retaining lever
8	0276 035 100	Ignition timing gauge
9	1476 018 000	Adjusting pin for flyweight
10	0276 170 000	Torque wrench
11	0276 175 000	Revolution counter
12	1476 013 000	Extractor sleeve assy.
	1476 011 000	Threaded sleeve } replacement parts
	1440 027 001	Hex head bolt } for 1476 013 000
	1476 012 000	Thrust bearing }
13	1447 009 000	Clamping ring, 58 mm I. D.
14	1476 014 025	Extractor shells for cylindrical roller bearing inner race NJ 206 E C3 NA
15	1476 014 000	Extractor shells for bearing bush (recoil starter)
16	1447 010 000	Clamping ring, 75 mm I. D.
17	1476 015 000	Extractor shells for deep groove ball bearing 6305 N C3
		Assembly jig
18	0276 081 000	Clamping base
19	0276 082 000	Swivel unit
20	0276 085 005	Clamping bolt
21	0977 041 000	Assembly bracket

DISMANTLING THE ENGINE

Detach all control cables between engine and frame.

Screw off cover (with inscription SACHS). Pull ignition leads with rubber boots out of the recesses and remove cover.

Disconnect electrical wiring between engine and frame at the terminals (2 and 3, Fig. 42).

Remove exhaust muffler, exhaust tube and manifold.

Remove the engine and clean it thoroughly before taking it apart.

When giving the engine a general overhaul, components should be dismounted in the sequence indicated.

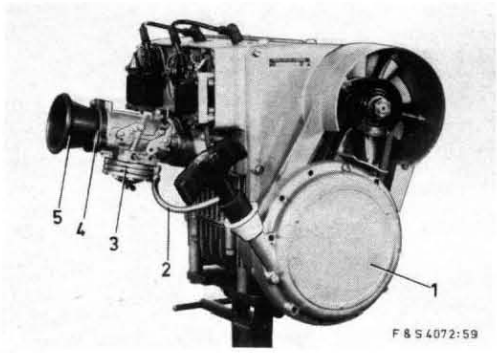

Fig. 1

Intake stack, carburettor and recoil starter

Fig. 1

Mount engine on assembly jig (repair tools no. 18, 19, 20 and 21) with 2 hex head bolts M 10 x 30, as shown in the illustration.

Screw off intake stack (5) with reinforcement ring (4).

Pull off impulse pipe (2).

Remove carburettor (3) (taking care of insulating sleeves and gasket).

Unscrew recoil starter (1) together with inserted labyrinth ring.

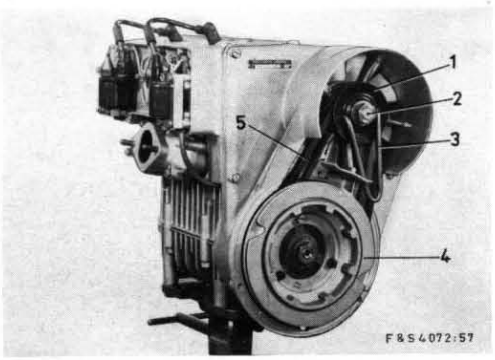

Fig. 2

V-pulleys and V-belt

Fig. 2

Use retaining fork (3, repair tool no. 6) to hold the idler pulley half (1), as shown in the illustration. Unscrew nut and remove idler pulley half (taking care of washers).

Unscrew pulley (4) and remove it together with V-belt (5).

Remove second idler pulley half together with washers.

Remove Woodruff key from fan shaft (2).

Magneto flywheel

Fig. 3

Use retaining lever (3, repair tool no. 7) to hold magneto flywheel, as shown in the illustration, and unscrew nut (2).

Remove washer (1).

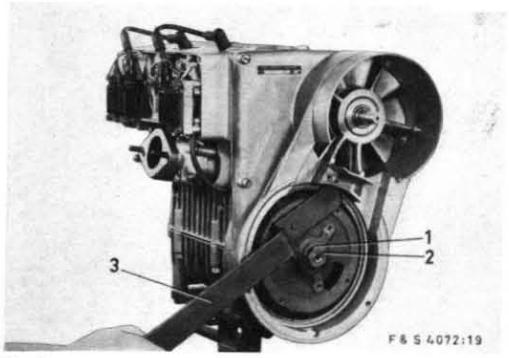

Fig. 3

Fig. 4

Reposition retaining lever, as shown in the illustration, and remove magneto flywheel (2) by means of withdrawal tool (1, repair tool no. 4).

Remove Woodruff key from crankpin.

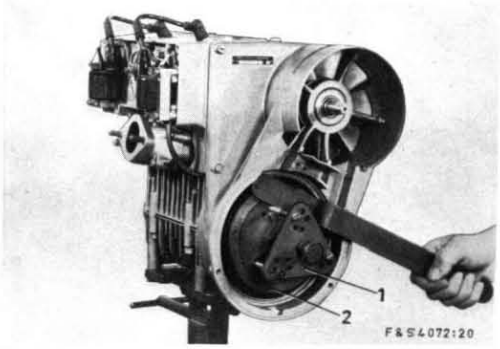

Fig. 4

Fan housing, fan and armature plate

Fig. 5

Unscrew fan housing (2) and take out fan (1) (sliding fit).

Detach leads from armature plate (3) at the terminals and unscrew armature plate.

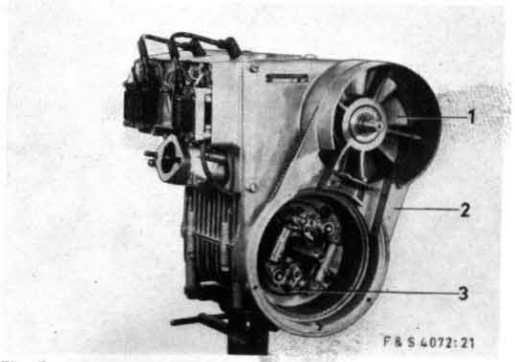

Fig. 5

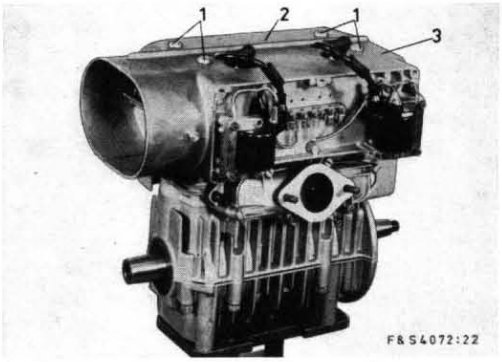

Fig. 6

Cylinder cover halves and upper part of intake manifold

Fig. 6

Unscrew self-locking nut (1, Fig. 41) and threaded pin.

Unscrew 4 screws (1) and remove cylinder cover halves intake and exhaust side (2 and 3).

Unscrew upper part of intake manifold.

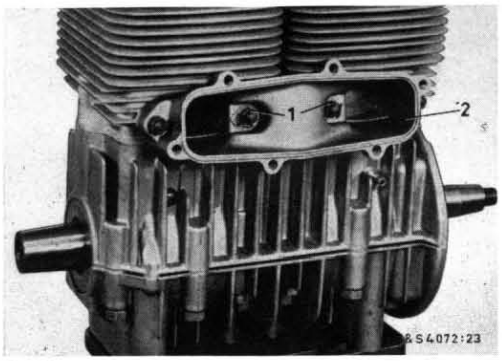

Fig. 7

Lower part of intake manifold

Fig. 7

Unlock nuts (1), unscrew lower part of intake manifold (2) and remove both gaskets.

Exhaust tubes, cylinder heads and cylinders

Fig. 8

Unscrew exhaust tubes (1) with an ordinary strap wrench, only if necessary.

Unscrew cylinder heads (3) and remove cylinder head gaskets.

Attention

Mark cylinder and piston (power takeoff side) together.

Remove cylinders (2) and cylinder flange gaskets.

Note:

The Alu-Chromal cylinders cannot be rebored.

Cylinders and pistons are divided into tolerance groups A, B and C.

Mount only pistons and cylinders which belong to the same tolerance group.

The cylinders are marked with corresponding letters (A, B or C) at the uppermost cooling fin. In tolerance group A pistons without rings and gudgeon pins are available separately (see spare parts list).

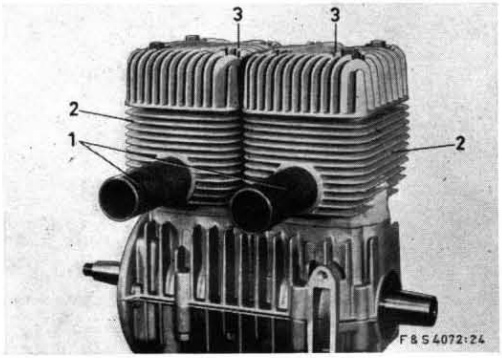

Fig. 8

Pistons and needle bearings

Fig. 9

Place piston on home-made slotted wooden board (4).

Cover the crankcase, take out wire circlips. If necessary, force out gudgeon pin with gudgeon pin extractor (3, repair tool no. 1) and insert (2, repair tool no. 2).

When fitting the steel band, make sure that the piston rings are in their grooves. (Danger of breaking piston rings.)

Remove slotted wooden board.

Remove needle bearing (1) and mark it together with the corresponding connecting rod eye.

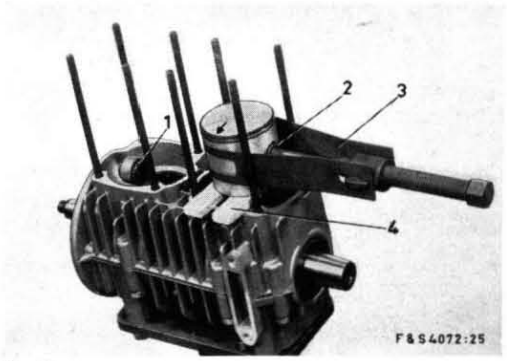

Fig. 9

Note:

When replacing needle bearings, watch tolerance mark on connecting rods (see spare parts list).

Unscrew crankcase from assembly jig.

Crankcase and crankshaft

Fig. 10

Unscrew threaded nipple (1) and screw plug (2).

Unscrew 12 nuts from lower part of crankcase.

Split crankcase by slightly tapping with a rubber mallet.

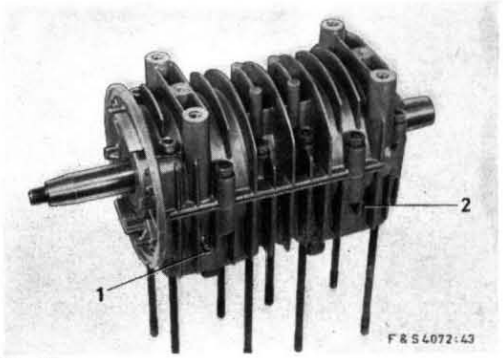

Fig. 10

Fig. 11

Remove oil seals (1 and 3), take out crankshaft (4) both locking disc halves (1, Fig. 32) and both cylindrical pins (2).

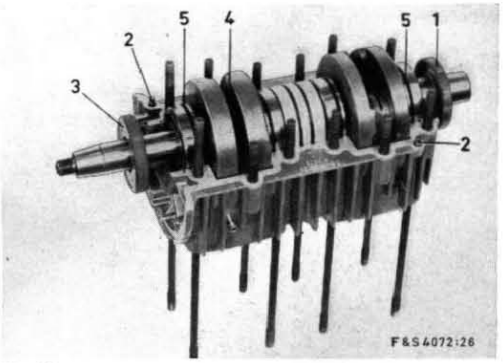

Fig. 11

Clean all parts thoroughly, check for wear and replace if necessary.

When giving the engine a general overhaul all sealing elements should be replaced.

Use only genuine SACHS spare parts.

WORK ON INDIVIDUAL COMPONENTS

Replacing crankshaft bearings

Of the crankshaft bearings only the deep groove ball bearing on the magneto side and the cylindrical roller bearing on the power takeoff side can be replaced.

Removal of inner races of cylindrical roller bearings and deep groove ball bearings.

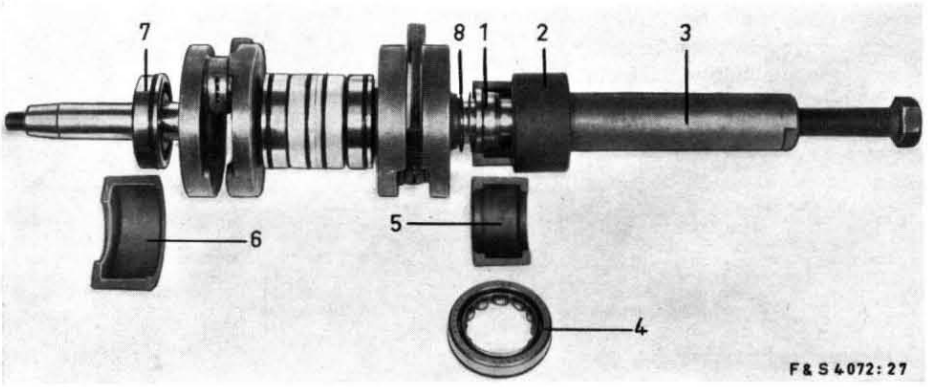

Fig. 12

Remove outer race (4) of cylindrical roller bearing and roller cage from inner race (1) of bearing.

Remove inner race (1) of cylindrical roller bearing and the deep groove ball bearing (7) by means of suitable extractor shells (5 and 6), clamping rings (2) and extractor sleeve (3, repair tools no. 12, 13, 14, 15, 16 and 17).

Remove shims (8).

Attention

If shims have been damaged during the operation of removing the inner race of the cylindrical roller bearing, replace them by new ones.

Measuring the axial play of the crankshaft

Permissible axial play 0.3...0.6 mm (0.0118...0.0236 in.)

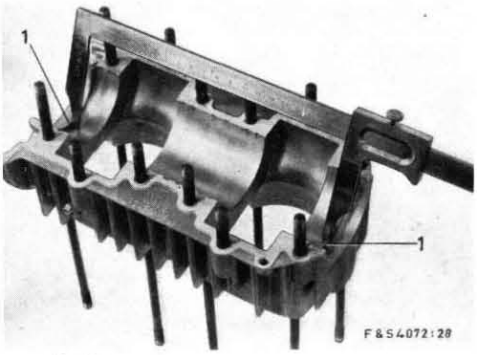

Fig. 13

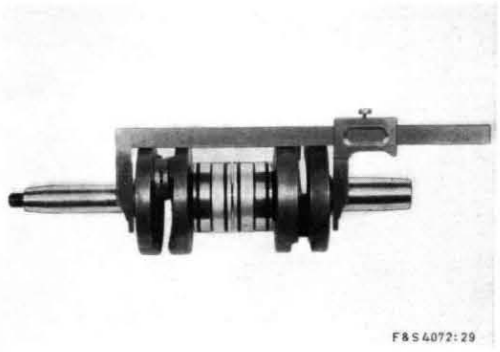

Fig. 14

Fig. 13

Before measuring, clean the grooves for the locking disc halves in the upper part of the crankcase.

Insert locking disc halves (1) into upper part of crankcase.

Example:

Upper part of crankcase:		
Distance between the two locking disc halves	209.4 mm	8.2441 in.
Fig. 14		
Fitting dimension of crankshaft:		
Dimension of crankshaft from deep groove ball bearing seat to cylindrical roller bearing seat	175.5 mm	6.9095 in.
Width of ball bearing	+ 17.0 mm	0.6693 in.
Width of roller bearing	+ 16.0 mm	0.6299 in.
	208.5 mm	8.2087 in.
Distance in upper part of crankcase	209.4 mm	8.2441 in.
Fitting dimension of crankshaft	– 208.5 mm	8.2087 in.
Existing axial play	0.9 mm	0.0354 in.
Permissible axial play	– 0.5 mm	0.0197 in.
Difference to be compensated	0.4 mm	0.0157 in.

The difference of 0.4 mm is compensated by inserting shims (8, Fig. 12) on the crankpin p. t. o. side. The shims are to be placed directly below the inner race of the cylindrical roller bearing.

Fitting the deep groove ball bearing and the inner race of the cylindrical roller bearing.

Heat deep groove ball bearing (with O-ring removed) and inner race of roller bearing to about 70...80 °C (158...176 °F).

Slip deep groove ball bearing on crankpin magneto side until a stop is reached (O-ring groove pointing towards crankweb).
Insert shims (8, Fig. 12) on crankpin p. t. o. side and fit inner race of cylindrical roller bearing until it reaches a stop (collar facing towards crankweb).
After the bearing has cooled off, press inner races completely into their seats.
During this operation, a suitable piece of material should be placed between the crankwebs. This piece must be large enough to be supported at both ends so that the crankshaft can lie freely in position.

Never clamp the crankshaft in a vise at a crankpin or at the webs, and never try to fit the inner races by hammering. This will crush the webs and render the crankshaft unserviceable.
Place outer race of cylindrical roller bearing with roller cage onto the inner race (groove for O-ring facing towards crankweb).
Wet O-rings (5, Fig. 11) slightly with oil and insert them into the outer races of the bearings.

Replacing fan shaft bearings

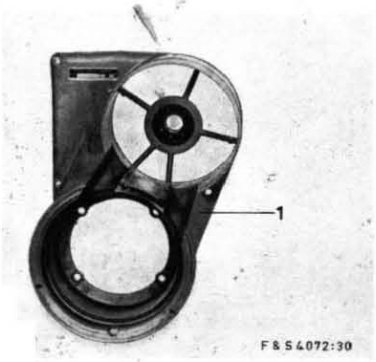

Fig. 15

Removal

Fig. 15

There is a lock ring between both bearings in the fan housing. Deep groove ball bearings can only be removed towards the side from which they have been fitted.

Heat fan housing (1) to about 100...150 °C (212...302 °F) and take out both deep groove ball bearings by slightly knocking the housing against a wooden support. Take care of washer between the bearings.

Note:

Remove lock ring in bearing seat only if necessary.

Installation

Fill deep groove ball bearing half with high temperature bearing grease. Take care when installing that the encased sides are pointing towards the outside.

Force first deep groove ball bearing into the warm housing on the cylinder side until a stop is reached (in doing so, exert pressure on the outer race of the bearing).

Insert fan shaft and fit washer (2 mm = 0.0787 in. thick).

Force in second deep groove ball bearing until a stop is reached (in doing so, exert pressure on the outer race of the bearing).

Recoil starter

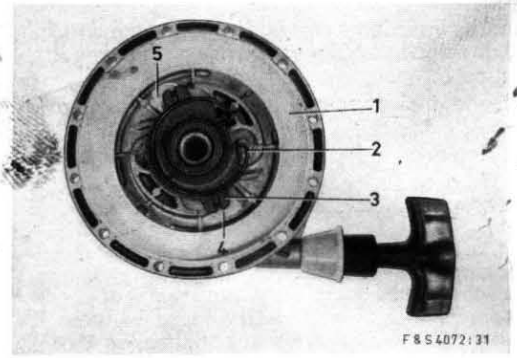

Fig. 16

Dismantling

Fig. 16

Take out labyrinth ring (1).

Take out brake spring (2), shims, spring ring, friction plate (3), washer (0.1 = 0.0039 in. thick) and starter pawls (4 and 5).

Fig. 17

Pull out starter rope approx. 50 cm (19 in.) and hold pulley (1) with home-made retaining clip (2), as shown in the illustration.

Take clamping ring (6) with clamping taper out of starter handle (5).

Withdraw clamping taper (7) from clamping ring and detach rope.

Remove clamping ring and starter handle with flanged sleeve (8), stop (4) and flanged sleeve (9) from rope.

Remove retaining clip and let starter rope run back completely.

Remove rope guide (3) only if necessary.

Carefully take out pulley with coil spring, taking care not to let coil spring jump out.

Take care of disc (3, Fig. 19).

Remove rope from pulley.

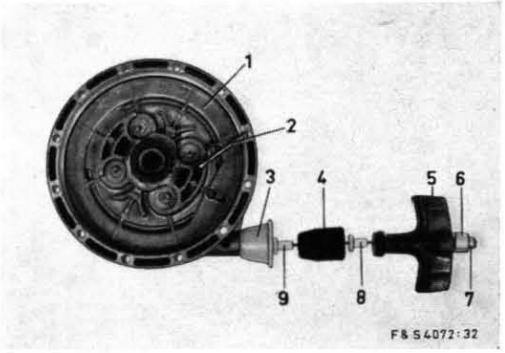

Fig. 17

Fig. 18

Raise spring end to take out coil spring.

Hold coil spring firmly with both thumbs (see illustration) and, by raising each thumb, let out spring on alternate sides.

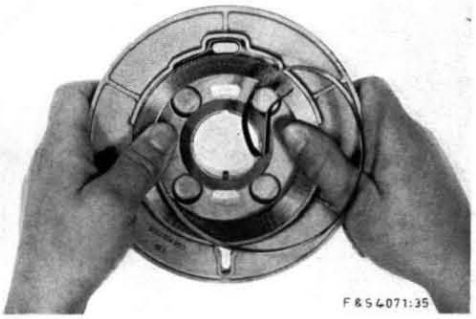

Fig. 18

Note:

Replace bush (1, Fig. 20) only if necessary, using the extractor shells, clamping ring and extractor sleeve (repair tools no. 15, 13 and 12).

Take care of tolerance ring in bush (1, Fig. 20).

Assembly

Fig. 19

Before assembling, grease spring with Aero-SHELL-Grease 14 and fill the 4 lubricating grooves in the pulley with the same lubricant.

Insert coil spring, as shown in illustration, with end of spring (2) in stud (1), fitting coil by coil in anti-clockwise direction.

Ensure that the coil spring lies flat and even.

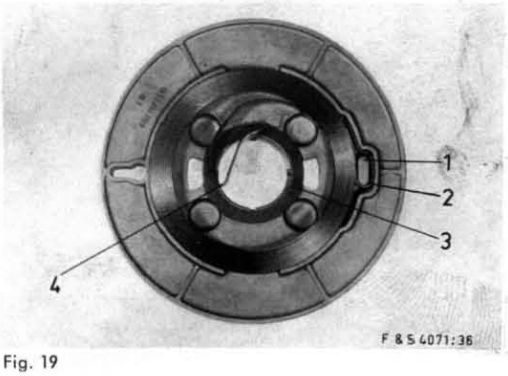

Fig. 19

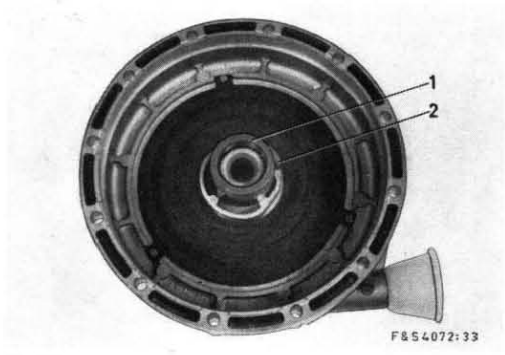

Fig. 20

Fig. 20

Before inserting pulley, stick washer (3, Fig. 19, 0.8 mm thick = 0.032 in.) with a little grease into recess of pulley.

Fit pulley onto bearing pin and insert end of spring (4, Fig. 19) at stud (2).

Tension pulley/coil spring in starting direction until a stop is encountered.

Release coil spring approx. ½... 1 turn until the recess for the soldered nipple in the pulley rests near the rope passage of the housing.

Hold pulley with home-made retaining clip (2, Fig. 21).

Pull the starter rope through a rag moistened with SAE 10 oil before assembling.

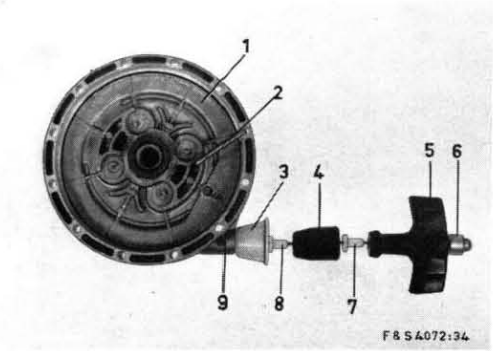

Fig. 21

Fig. 21

Fit rope guide (3, if removed), flanged sleeve (8), stop (4), flanged sleeve (7), starter handle (5) and clamping ring (6) onto the rope.

Clamp rope guide with fillister head cap screw (9) M 4 x 10.

Lay starter rope around clamping taper and pull it into clamping ring.

Pull clamping ring into starter handle and let starter rope run back.

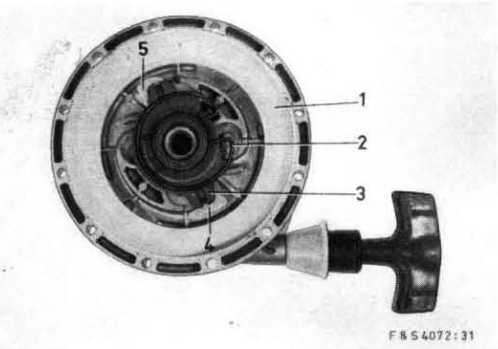

Fig. 22

Fig. 22

Lubricate starter pawl bed and starter pawls lightly with SAE 10 oil.

Fit starter pawls (4 and 5).

The open side of the starter pawl seating and the long side of the starter pawl face in starting direction.

Fit washer 0.1 mm (0.0039 in.) thick, friction plate (3), spring ring and shims as required.

Insert brake ring (2).

Insert labyrinth ring (1).

After mounting the brake spring, the friction plate should have an axial play of 0.1...0.2 mm (0.0039...0.0079 in.).

Correct this play by inserting shims under the brake spring.

Magneto generator

The cylinder on the p. t. o. side of the crankshaft is referred to as cylinder 1.

Fig. 23
1 = Set of contact points } for cylinder 2
2 = Capacitor
3 = Ignition armature
4 = Ignition armature } for cylinder 1
5 = Set of contact points
6 = Capacitor
7 = Armature plate
8 = Lubricating wick
9 = Generator armature

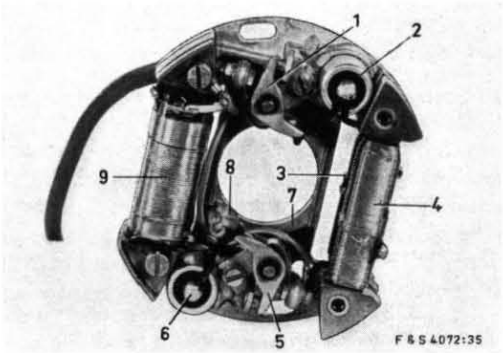

Fig. 23

Replacing the ignition or generator armature

Open up the strap holding the armature which is to be replaced and unsolder leads. Screw off armature.

Generator and ignition armature are available as spare parts. The armature poles are lathe-turned and can be mounted to the armature plate without special equipment.

Place new armature in position, as shown in the illustration, and screw it on lightly (take care of ground wire on generator armature).

After installation it is necessary under all circumstances to measure the air gap between armature poles and flywheel, because maximum ignition and lighting power is obtained only if the gap is 0.25...0.35 mm (0.0098...0.0138 in.).

Note:

For correct measurement and adjustment it is necessary that the crankshaft rests correctly on its bearings.

Fig. 24
Air gap 0.25...0.35 mm (0.0098... 0.0138 in.).
The gap is measured in several places, through the slots in the flywheel.
If the gap is not correct, it can be slightly adjusted by repositioning the armature after having slackened the fastening screws. The adjustment can be made through the apertures in the flywheel.

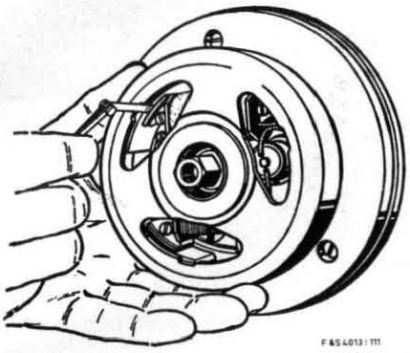
Fig. 24

Replacing the sets of contact points

In order to achieve a uniform ignition setting for both cylinders it is necessary to replace both sets of contact points together.

The contact breaker should be replaced if the contacts, the slider or the pivot shaft are badly worn, if the bearing bush is worn or if the contact breaker arm or the spring are damaged.

1. Screw off primary lead and capacitor lead.
2. Remove retainer and contact breaker arm from pivot shaft (take care of shims).
3. Unscrew fillister head cap screw and remove contact carrier.
4. Unscrew pivot shaft from armature plate.

New parts should be fitted in reverse order, proceeding as follows:

Caulk the pivot shaft after screwing it in.

Use only the sets of contact points specified for this engine.

When fitted in position, the contact breaker points must not be displaced or tilted.

Apply BOSCH Ft 1 v 8 grease to bearing bush before fitting.

Smear BOSCH grease Ft 1 v 4 on the lubricating pad and on the grease wedge in the slider. (BOSCH grease is available in tubes at all BOSCH suppliers.)

Do not allow any grease or oil to reach the contacts.

Replacing the capacitor

1. Unsolder leads.
2. Push the capacitor out of the armature plate with a round piece of wood.
3. Remove the caulked spots from the hole with a scraper.
4. Insert new capacitor and carefully caulk again.
5. Solder both leads to their terminals.

Replacing ignition coils and ignition leads with spark plug terminals

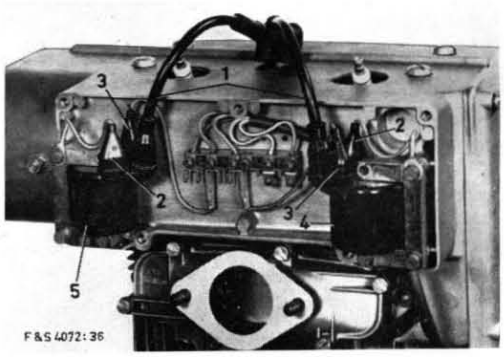

Fig. 25

Removal

Fig. 25

Unscrew ignition coil (5, for cylinder 1) and coil (4, for cylinder 2).

Remove cable shoes (3) and cable shoes (2) and unscrew ignition leads (1).

Installation

Screw ignition leads (1) to ignition coils.

Place cable shoes (2) for ground wire (brown) on terminal 15 and cable shoes (3) for primary lead (blue) on terminal 1 of the ignition coils.

Screw on ignition coils with ground wire using 3 fillister head cap screws M 5 x 25 and spring washers, as shown in the illustration.

Attention

When replacing spark plug terminals, hang spring into ignition lead (make sure that the spring gets in contact with the core of the ignition lead), and insert the spring together with the ignition lead into the spark plug terminal.

Replacing the flanged hub, the magneto flywheel and the cam

Fig. 26

Slacken 4 Phillips screws (1) in magneto flywheel (5) by light jarring blows, screw them out and remove the flanged hub.

Unscrew retaining ring (3) and take out cam (4).

Fill annular groove (8) with BOSCH grease Ft 1 v 26 and slightly grease cam support in flywheel. (BOSCH grease is available in tubes at all BOSCH suppliers.)

Insert cam (4), fit retaining ring (3) and fasten with 3 fillister head cap screws M 4 x 5 and washers.

Take lock ring (7), flyweight (6) and thrust washer below off from bearing pin.

Grease bearing pin and bearing surface of flyweight in flywheel slightly with BOSCH grease Ft 1 v 26.

Fit thrust washer (0.3 mm = 0.0118 in. thick) on bearing pin, insert spring (2) in flyweight.

Fit flyweight on bearing pin (must engage with cam) and secure with lock ring (7).

Cam and flyweight must always be freemoving.

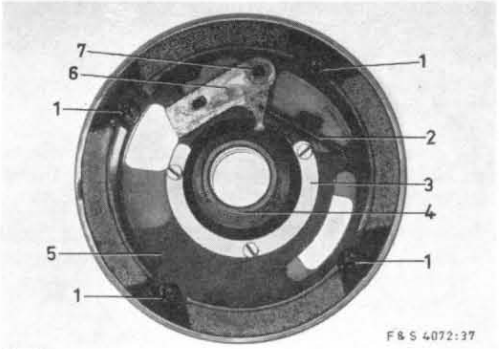

Fig. 26

Position flanged hub on the magneto flywheel (5) in such a way that the bores coincide.

Degrease 4 convex-head Phillips screws M 6 x 10 with a suitable solvent (we recommend Tri), lute with LOCTITE AA-89-790 and screw them in.

Tightening torque 0.9...1.1 kpm (6.5...8.0 ft. lb.).

Carburettor

The type of carburettor, the jet sizes and the jet adjustment are determined by means of tests in the factory. The setting achieved in this way is an opimum value, and it is therefore not advisable to alter it.

No alteration of the carburettor setting should be made as long as the engine turns over quietly and smoothly at low speed (i. e. when idling), accelerates steadily when the throttle is opened, and gives its full output at full revs without coughing. If the engine pounds or runs unevenly, or if the exhaust fumes are black, the mixture is too rich. Repeated spitting or coughing, backfiring with a blue flame stabbing from the carburettor and difficult starting are indications that the mixture is too lean.

When the carburettor is correctly adjusted and a suitable spark plug with a correct thermal value is used, the insulator of the spark plug should be brown in color. Sooty or wet plugs indicate rich mixture, whereas a white insulator indicates that the mixture is too lean.

Special care should be taken to ensure that the carburettor setting is never too low, as when the fuel feed is restricted insufficient lubricant will be conveyed to the moving parts of the engine. With a two-stroke engine the carburettor setting should always be sufficient to provide adequate lubrication.

Only a correctly adjusted carburettor will ensure low fuel consumption and an optimum of economical operation.

Adjusting the carburettor for special climatic conditions

When using the engine at altitudes above 1000 metres (3280 ft.), a correction of the carburettor setting will be required. In places where air density is reduced (i. e. in mountainous areas), the supply of fuel should be restricted by changing the main jet opening.

Starting

On Tillotson diaphragm carburettors the choke is incorporated in the carburettor itself.

The choke serves to facilitate starting. It should be fully closed only for starting the cold engine. On a warm engine it should be closed only partially, if ever.

When the choke is closed, a higher vacuum is caused in the mixing chamber, so that a richer fuel/air mixture is obtained. Once the engine has started, the choke should be slowly opened.

The Tillotson diaphragm carburettor can function in any position and has 3 diaphragms: a control diaphragm for proportioning the fuel feed to the engine and 2 pump diaphragms for drawing the fuel from the tank.

TILLOTSON-Diaphragm Carburettor (Schematic view)

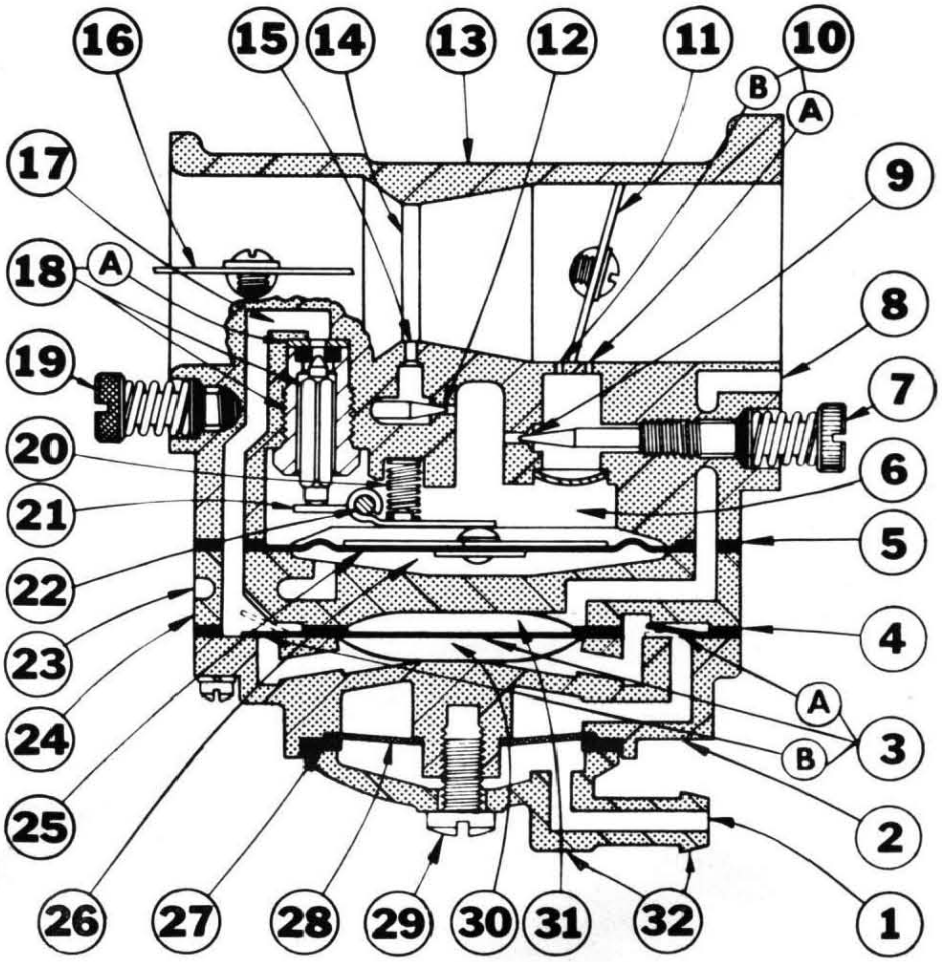

Fig. 27

F&S 430 152

1 Hose nipple
2 Fuel pump body
3 Fuel pump diaphragm
3A Inlet valve on pump diaphragm
3B Outlet valve on pump diaphragm
4 Fuel pump gasket
5 Diaphragm housing gasket
6 Control chamber
7 Adjusting screw for idling jet
8 Impulse passage
9 Idling jet orifice
10A Idling outlet passage
10B By-pass passage
11 Butterfly valve
12 Main jet orifice
13 Carburettor housing
14 Throat of carburettor (venturi)
15 Main fuel outlet
16 Choke
17 Fuel passage from pump to control chamber
18 Inlet needle and seat
18A Copper seal
19 Adjusting screw for main jet
20 Inlet compression spring
21 Inlet control lever
22 Pivot pin
23 Vent hole
24 Diaphragm housing
25 Diaphragm
26 Air chamber
27 Filter gasket
28 Fuel strainer
29 Filter housing screw
30 Fuel chamber
31 Pulsation chamber
32 Fuel filter housing

Carburettor adjustment

The Tillotson carburettor is the first carburettor used on SACHS engines which has adjustable jets. If engine troubles occur and the jets have to be readjusted, the following points should be borne in mind:

1. To adjust the carburettor correctly for maximum output (full load), the engine should be thoroughly warmed up.
2. With adjustable jets, care should be taken not to render the fuel/air mixture too lean (see also page 18).
3. The adjusting screws for the jets must never be screwed too tight into the seat (i. e. closed), as this will deform the seat.

Initial adjustment

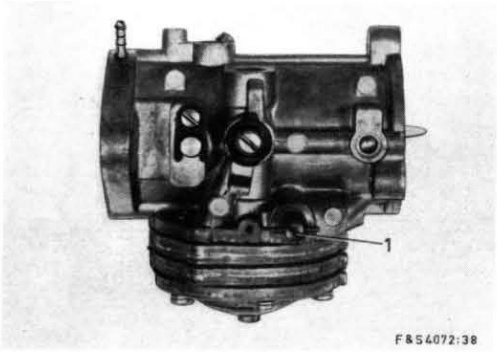

Fig. 28

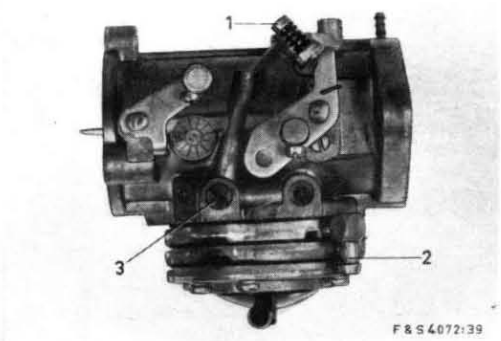

Fig. 29

For initial adjustment, close the adjusting screw for the main jet (1, Fig. 28) and the adjusting screw for the idling jet (3, Fig. 29) (turn in clockwise direction till a light stop is encountered). Then turn the adjusting screw for the main jet back again 1¼ turns, the adjusting screw of the idling jet one turn. Turn the idling adjustment screw (1, Fig. 29) so far back that it is no longer in contact with the butterfly valve lever; then turn the screw in again about one whole turn, so that the butterfly valve is slightly open.

Final adjustment: see section "Test-running the engine" on page 40.

Maintenance of the carburettor

At certain intervals every carburettor must be disassembled, cleaned and overhauled. All exterior dirt should be cleaned off with gasoline before disassembly. The bores, ducts, passages and jets must not be cleaned with hard objects (e. g. wire or drill), but should only be rinsed with gasoline and cleaned with compressed air (remove diaphragms before blowing through). Before assembly, check that all carburettor components (especially jet seats and diaphragms) are in proper working order.

Checking and cleaning the fuel filter in good time helps to achieve a satisfactory performance of the carburettor and longer engine service life.

Special maintenance instructions

1. If the pump fails, always check (before removing the pump diaphragm) the impulse pipe for leakage or blockage.
2. When fitting the inlet control lever and the compression spring (see illustration), make sure that both ends of the spring are embedded in the spring seats.

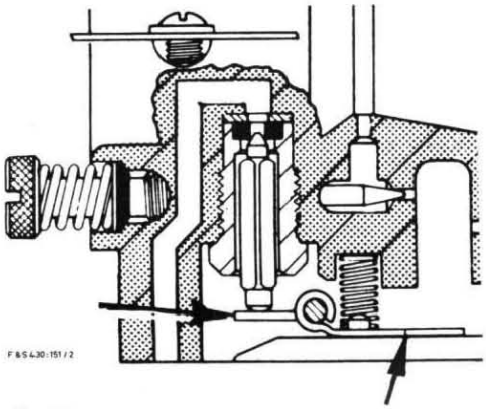

Fig. 30

3. The compression spring must not be stretched, as the spring tension is accurately adjusted to the carburettor.
4. The inlet control lever is correctly inserted when it is at the same level as the bottom of the diaphragm chamber (see arrows on illustration).
5. The inlet needle should close just when the inlet control lever is flush with the bottom of the chamber. If this is not the case, adjust the lever by bending it a little (on the inlet needle side).
6. When assembling the carburettor, make sure that diaphragms, gasket and cast-iron parts of the housing are carefully inserted into the cast-on centering pins; similarly, the gaskets, the pump diaphragms and the fuel pump body are aligned by means of the same kind of centering pins.

   The diaphragm gaskets are always positioned on that side of the diaphragm which faces towards the carburettor housing.

Decarbonizing the exhaust muffler, the cylinders and the cylinder heads

In every engine a portion of the lubricating oil is burnt and forms carbon which in a two-stroke engine is deposited chiefly on the piston crowns, in the exhaust ports of the cylinders and in the exhaust system. The carbon should be removed after every 200 hours of operation, at the latest when engine performance drops or when, even with correct carburettor setting, the engine tends to four-stroke.

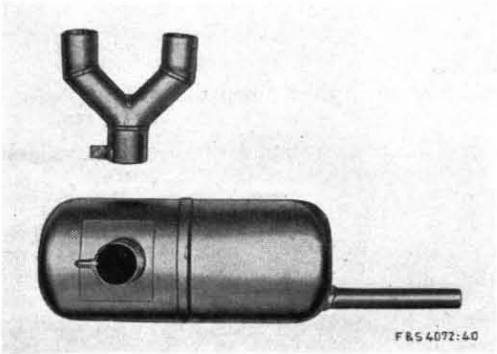

Fig. 31

Exhaust system

Fig. 31

Detach exhaust muffler, exhaust tube and manifold.

Clean the inside of the manifold with an ordinary wire brush.

The exhaust muffler cannot be dismantled for cleaning.

Carbon deposits can be burnt off by heating the muffler to red heat by means of a welding torch or in a forge fire.

The exhaust system should not be modified, as any such alterations will be detrimental to performance and fuel consumption and will increase the exhaust noise. Any modifications of the exhaust system are moreover illegal and constitute a punishable offence.

Cylinder heads

Unscrew the cylinder heads and remove the carbon deposits from the inside of the combustion chambers with a screwdriver. Take care not to damage the surface of the combustion chambers.

Cylinder ports and exhaust tubes

Place piston at bottom dead center.

Remove carbon deposits in exhaust and transfer ports with a screwdriver.

Clean exhaust tubes with an ordinary wire brush.

Carefully place piston at top dead center and remove loose carbon.

Pistons

Carefully remove only the thicker carbon deposits (flakes) from the piston crowns. Do not try to scrape the piston crowns to a bright metallic condition.

ASSEMBLING THE ENGINE

Crankcase and crankshaft

Fig. 32

Screw threaded nipple (4) and convex-head fillister head cap screw (3) M 6 x 6 with gasket into upper part of crankcase.

Note:

Before inserting the locking disc halves, clean both grooves in the upper part of the crankcase.

Insert both locking disc halves (1) and both cylindrical pins (2).

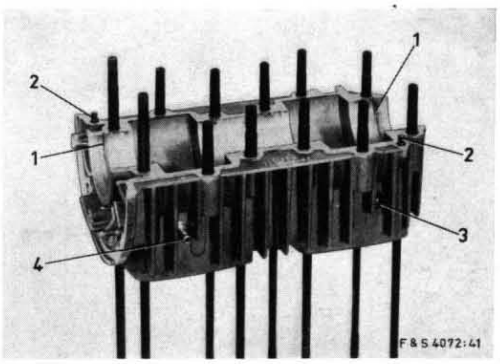

Fig. 32

Fig. 33

Insert preassembled crankshaft into upper part of crankcase, deep groove ball bearing (2) facing towards magneto side.

Fill the grooves of the oil seals with high temperature bearing grease (Alvania 3) before fitting them. Also smear the sealing lips slightly with this grease.

Fit oil seal (3, 23.6 x 62 x 10) on crankpin magneto side, and oil seal (1, 28.4 x 62 x 10) on crankpin p. t. o. side, flush with the outer edge of the crankcase. (Sealing lips facing towards crankweb.)

Smear sealing surfaces in crankcase with sealing compound (we recommend sealing compound No. 1073 supplied by Mssrs. Ernst Sonderhoff, D-5000 Köln-Bickdorf, Postfach 22).

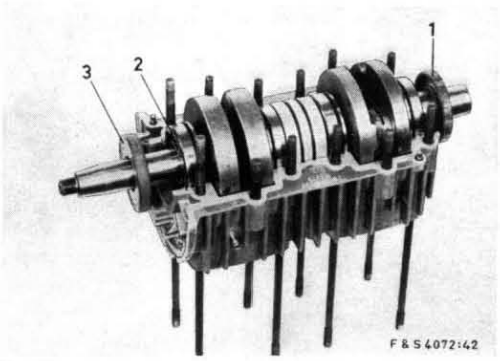

Fig. 33

Fig. 34

Put on lower part of crankcase (1).

Screw crankcase halves together with 12 nuts M 8 and spring washers. The nuts have to be tightened diagonally (beginning with the nuts in the middle).

Tightening torque 2.3...2.8 kpm (16.6...20.2 ft. lb.).

Mount crankcase on assembly jig, as shown in Fig. 9.

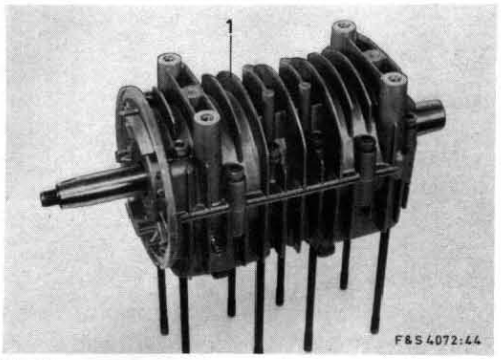

Fig. 34

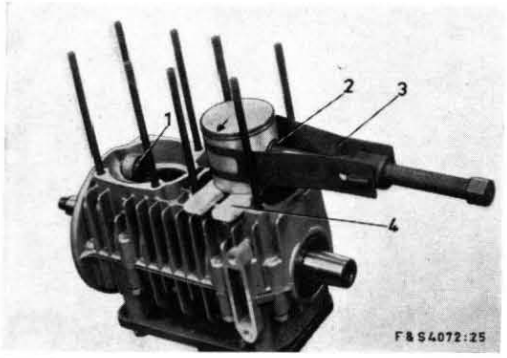

Fig. 35

Needle bearings and pistons

Fig. 35

Insert both needle bearings (1, the illustration shows only one needle bearing) into the corresponding connecting rod eyes, oiling them slightly before insertion (see marking of needle bearing and connecting rod eye under "DISMANTLING THE ENGINE" on page 9).

Put pistons on the connecting rods with locating pin (repair tool no. 3), arrows on piston tops pointing towards the exhaust side.

Attention

Fit marked piston on connecting rod p. t. o. side (see marking of cylinder and piston p. t. o. side under "DISMANTLING THE ENGINE" on page 8).

Use a slotted wooden board (4). Fit the gudgeon pin (sliding fit). If necessary, heat piston to 70...80 °C (158...176 °F) and fit it by means of the gudgeon pin extractor (3, repair tool no. 1) and insert (2, repair tool no. 2).

Remove the locating pin.

Cover the crankcase and insert 4 wire circlips.

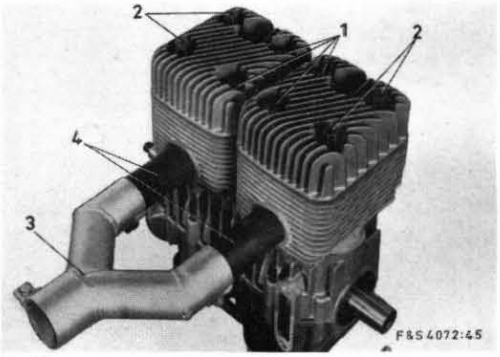

Fig. 36

Cylinders, cylinder heads and exhaust tubes

Fig. 36

Fit cylinder flange gaskets according to the shape of the transfer ports.

Place pistons on slotted wooden board (4, Fig. 35) and fit the cylinders which should be slightly oiled before this operation (the marked cylinder is to be fitted on the p. t. o. side).

Remove slotted wooden board.

Fit cylinder head gaskets (small sheet metal rim facing towards cylinder head).

Fit cylinder heads (spark plug passages facing towards inlet side).

Attention

When screwing in the spark plugs watch the length of the threads.

Spark plug W 240 T 1 for cylinder head with approx. 13 mm (0.51 in.) thread length, spark plug W 260 T 2 for cylinder head with approx. 17 mm (0.67 in.) thread length.

For aligning the cylinder, screw in exhaust tubes (4) provisionally, fit exhaust manifold (3) temporarily and move the pistons up and down several times.

Fasten cylinders and cylinder heads with 4 nuts (1) M 8 and 4 nuts (2) M 8 x 27 and washers (3.5 mm = 0.134 in. thick). Tighten the nuts diagonally.

Tightening torque 2.8...3.0 kpm (20.2...22.0 ft. lb.).

Remove exhaust manifold.

Tighten exhaust tubes with an ordinary strap wrench.

Lower and upper part of intake manifold

Fig. 37

Fit both gaskets on the cylinders and fasten lower part of intake manifold (2) with 4 nuts M 6, 2 spring washers and the two locking plates (1).

Bend the locking plates over.

Fasten upper part of intake manifold with sealing ring inserted, with 6 fillister head cap screws M 6 x 30 and spring washers.

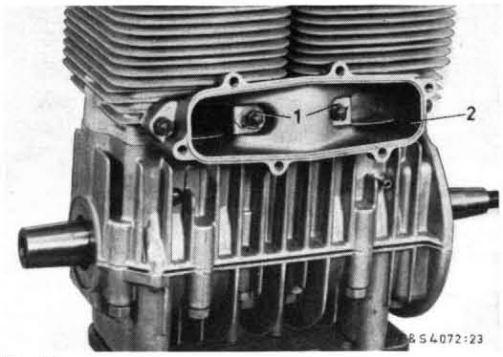

Fig. 37

Carburettor and intake stack

Fit gaskets and both insulating sleeves on upper part of intake manifold and fasten carburettor with two self-locking nuts M 8.

Tightening torque 0.8...1.1 kpm (5.8...8.0 ft. lb.).

Fit impulse pipe to nipple (4, Fig. 32) and carburettor connection (2, Fig. 29).

Fasten intake stack (5, Fig. 1) and reinforcement ring (4, Fig. 1) with 3 fillister head cap screws ¼" and spring washers.

Armature plate

Fig. 38

Insert armature plate (3) together with leads. Watch the markings (2). A new armature plate has no marking and can be aligned by means of the longitudinal slots.

Smear both fillister head cap screws (1) M 5 x 15 with washers with sealing compound (we recommend the liquid sealing compound „Diamant" type "OW", supplied by Messrs. Glöckner KG, D-8756 Kahl/Main, Postfach 80) and tighten them.

Tightening torque 0.4...0.5 kpm (2.9...3.6 ft. lb.).

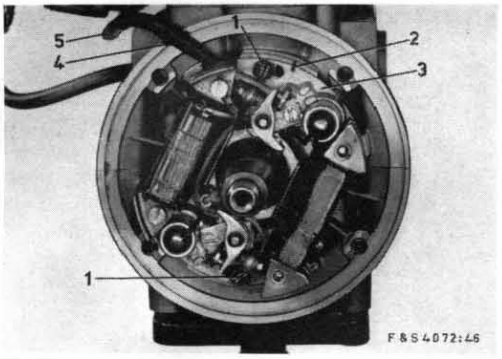

Fig. 38

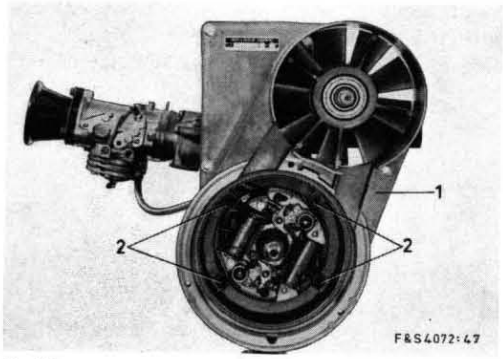

Fig. 39

Fan housing

Fig. 39

Place insulating sheath (5, Fig. 38) with wires into the passage (4, Fig. 38).

Place fan housing (1) into centering device on crankcase and fasten it with 4 hex head screws (2) M 8 x 25.

Tightening torque 1.5...2.0 kpm (10.8...14.4 ft. lb.)

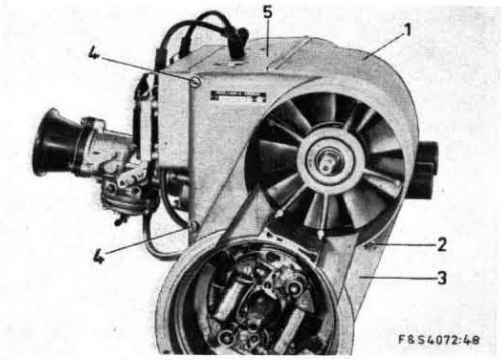

Fig. 40

Cylinder covers

Fig. 40

Fasten cylinder cover exhaust and intake side (1 and 5) to the fan housing (3) with 2 fillister head cap screws (4) M 6 x 30 and 1 fillister head cap screw (2) M 6 x 75 with spring washers (make sure that the covers are properly seated).

Tightening torque for fillister head screw M 6 x 30 0.5...0.6 kpm (3.6...4.3 ft. lb.)

Tightening torque for fillister head cap screw M 6 x 75 1.5... 2.0 kpm (10.8...14.4 ft. lb.)

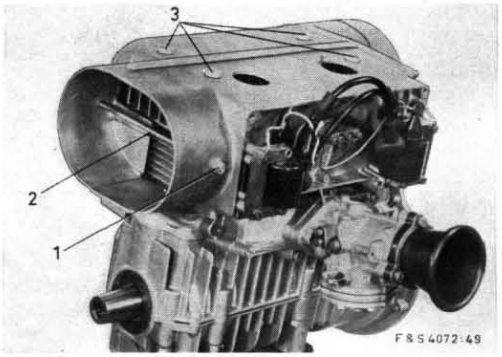

Fig. 41

Fig. 41

Screw both cylinder cover halves together with threaded bolt (2) M 6 x 182 (locked with 2 nuts M 6) and 1 self-locking nut (1) M 6 and washers.

Fasten both cylinder cover halves to the cylinder heads with 4 convex-head fillister head cap screws (3) M 8 x 15 and spring washers.

Fig. 42

Lead insulating sheath (1) with wires towards the terminals and connect as follows:

Terminal block 2:

Lighting leads (yellow) to terminal 1 and 2

Terminal block 3:

Primary lead (blue/yellow) to terminal 1

Primary lead (blue) to terminal 2

Ground wire (brown) to terminal 3

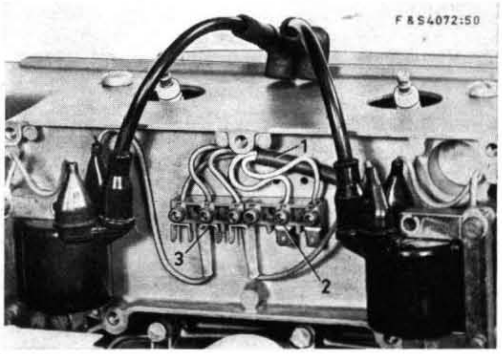

Fig. 42

Magneto flywheel

Insert Woodruff key into crankpin.

Attention

If new contact breakers have been fitted or if the contact breaker gap is not within 0.4 ± 0.05 mm (0.01575 ± 0.00196 in.), adjust contact breakers before fitting the magneto flywheel in such a way that the sliders of the contact breaker arms have the greatest distance from the crankpin.
Degrease the taper of the crankshaft and of the magneto flywheel.
Fit magneto flywheel with flanged hub, making sure that the Woodruff key engages accurately with the groove in the flanged hub.
Use retaining lever to hold the magneto flywheel, as shown in Fig. 4, and fasten it with washer and nut M 14 x 1.5 (the chamfered side of the washer facing towards crankpin taper).
Tightening torque 11.0...12.0 kpm (79.6...86.8 ft. lb.).

Ignition timing

Fig. 43

Firing point:
Stopped engine
0.25...0.30 mm (0.0098...0.0118 in.) before TDC

Running engine
3.5...4.0 mm (0.1378...0.1575 in.) before TDC

Contact breaker gap:
0.4 ± 0.05 mm
(0.01575 ± 0.00196 in.)

Pole shoe gap:
Stopped engine
25...29 mm (0.9843...1.1417 in.)
Running engine
7...11 mm (0.2756...0.4331 in.)

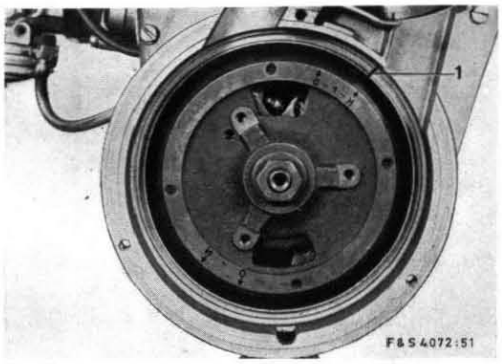

Fig. 43

Measuring instruments:

Ignition timing gauge (repair tool no. 8), adjusting pin for flyweight (repair tool no. 9).
Feeler gauge 0.4 mm (0.016 in.)
The flanged hub is provided with two punched marks.
"O-1-M" is for piston 1 (p. t. o. side), "O-M" is for piston 2.
"O" coincides with the marking (1, Fig. 43) on the fan housing when the piston is at top dead center.
"M" indicates the firing position.

It is advisable to check the ignition setting every time when the engine is serviced, since engine performance depends on it. Various troubles in the lighting system may also be caused by an incorrect ignition setting.

Also check the electrode gap of the spark plug (0.5 mm = 0.020 in.).

Measuring out and determining timing marks

If there are no timing marks on the flanged hub and on the fan housing, they have to be measured out and determined in operating position by means of the timing gauge and the adjusting pin, according to the following description:

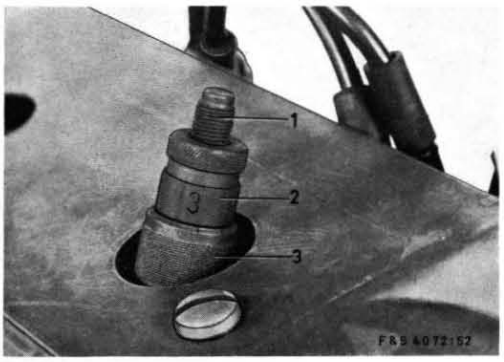

Fig. 44

Fig. 44 and 45

1. Provide the fan housing with a mark (1, Fig. 43).
2. Move piston 1 (p. t. o. side) with timing gauge (3, Fig. 44) to top dead center, and align position of magneto flywheel to that piston position.
   In this position of the magneto flywheel, provide the flanged hub with the TDC mark "O", as shown in Fig. 43.
   Tighten adjusting nut (2, Fig. 44) until a light stop is encountered.
3. When adjusting the spark advance, it has to be borne in mind that the spark plug passages are inclined at an angle of 30° towards the piston bearing surfaces.

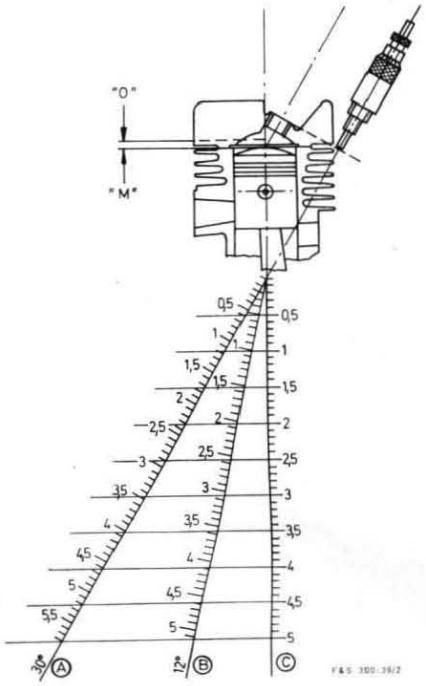

Fig. 45

Therefore a correspondingly higher value has to be adopted, as shown in Fig. 45, 30° scale (A).

Example:

If the firing point is 3.5...4.0 mm (0.1378 ...0.1575 in.) before TDC (scale C), the value to be adopted is 4.0...4.6 mm (0.1575...0.1811 in.) (scale A).

Turn adjusting nut (2, Fig. 44) in anti-clockwise direction, according to the value to be adjusted (1 turn of the adjusting nut = 1 mm).

4. Put flyweight in completely released position, using adjusting pin for flyweight or retaining pin (as shown in Fig. 46).
   Turn magneto flywheel against its direction of rotation, until the adjusting nut (2, Fig. 44) rests on the timing gauge (3) and piston 1 hits the measuring pin (1).
5. In this position of the magneto flywheel provide the flanged hub with the timing mark "M" and with the mark "1", as shown in Fig. 43.
6. Determine TDC and firing position of piston 2 in the same way, and mark the flanged hub with "O" and "M".
7. Take out adjusting pin (3, Fig. 46) or retaining pin.

The ignition setting is carried out in operating position, i. e. when the flyweight is completely released.

1. When the cam is at its highest position, adjust contact breaker gap (contact breaker 5, Fig. 23) for cylinder 1 (p. t. o. side) to 0.4 ± 0.05 mm (0.016 ± 0.002 in.).
2. Bring flyweight in operating position.

Fig. 46

Lift flyweight (1) slightly, insert adjusting pin (3, repair tool no. 9) into the bore in such a way that the chamfered side faces towards the flyweight, and bring flyweight in completely released position.

Note:

If there is no bore for the adjusting pin, insert a suitable retaining pin (round pin, approx. 2 mm = 0.08 in. dia.) into the tapped hole (2) and bring flyweight in completely released position.

Do not insert the retaining pin too deep because it may damage the armature coils when the magneto flywheel is turned.

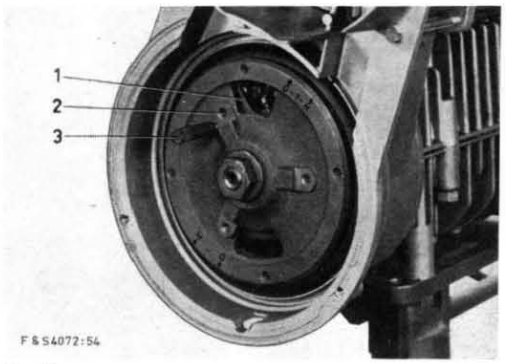

Fig. 46

3. Turn the magneto flywheel against its direction of rotation until the "M" of the mark "O-1-M" on the flanged hub coincides with the mark (1, Fig. 43) on the fan housing.
4. Turn the magneto flywheel slightly in direction of rotation: the contact breaker (5, Fig. 23) for cylinder 1 should now begin to open. If not, the firing point can be corrected by turning the armature plate. This can be done by means of the longitudinal slots.
   Turning the armature plate against the direction of rotation advances the ignition, turning it in direction of rotation retards the ignition.
5. After any such correction, smear armature plate screws with sealing compound "Diamant" (see page 25) and tighten them.
   Tightening torque 0.4...0.5 kpm (2.9...3.6 ft. lb.)
   Tighten magneto flywheel nut.
   Tightening torque 11.0...12.0 kpm (79.6...86.8 ft. lb.)
6. If the ignition setting is carried out correctly, the pole shoe gap (a, Fig. 47) should be 7...11 mm (0.2776...0.4331 in.).

Fig. 47

The pole shoe gap is measured where the magnet in the flywheel leaves the edge of the armature shoe of the ignition armature, in the direction of rotation of the magneto flywheel.

Should the pole shoe gap be incorrect, it can be corrected by slightly adjusting the contact breaker gap (b) within the range of 0.4 ± 0.05 mm (0.016 ± 0.002 in.).

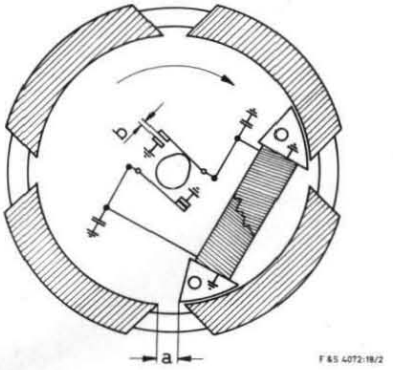

Fig. 47

7. Turn magneto flywheel against its direction of rotation until the "M" of the mark "O-M" on the flanged hub coincides with the mark (1, Fig. 43) on the fan housing.
8. Turn the magneto flywheel slightly in direction of rotation: the contact breaker (1, Fig. 23) for cylinder 2 should now begin to open. If not, the firing point can be corrected by adjusting the contact breaker gap within the range of 0.4± 0.05 mm (0.016 ± 0.002 in.).
9. Remove adjusting pin (3, Fig. 46) or retaining pin.

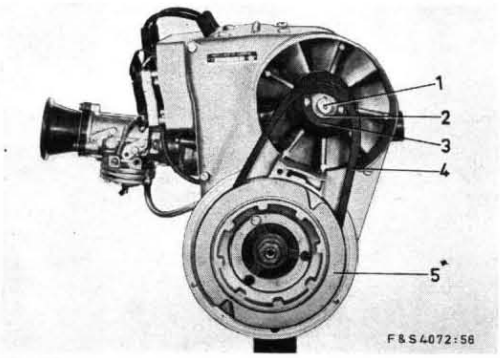

Fig. 48

V-pulleys and V-belt

Fig. 48

Insert Woodruff key into fan shaft (1) and fit one idler pulley half (3).

Place V-belt (4) 9.5 x 650 on pulley (5) and fasten pulley with 3 fillister head cap screws M 6 x 15 and spring washers.

Tightening torque 0.8...1.1 kpm (5.8...8.0 ft. lb.).

Insert shims (2) as required (they serve to adjust the tension of the V-belt).

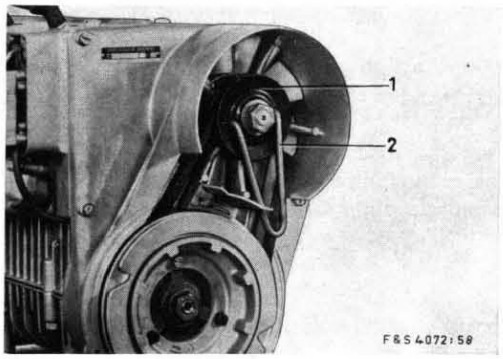

Fig. 49

Fig. 49

Fit second idler pulley half (1). Use retaining fork (2), as shown in the illustration, and tighten nut M 14 x 1.5 together with spring washer.

Tightening torque 4.0...4.5 kpm (28.9...32.5 ft. lb.).

Check V-belt tension.

Note:

If one presses against the V-belt with one's thumb, it should yield approx. 1.5 cm (0.6 in.). The correct tension is achieved by taking out or inserting shims between the two pulley halves. Tension is increased by taking out shims, and diminished by inserting additional shims.

Newly fitted V-belts have a tendency to stretch. They should be checked after approx. 20 hours of operation, and retightened if necessary.

Recoil starter

Fig. 50

Fasten recoil starter (2), with labyrinth ring inserted, to the fan housing with two fillister head cap screws (1) M 6 x 38 and 1 fillister head cap screw (3) M 6 x 52 and spring washers, as shown in the illustration.

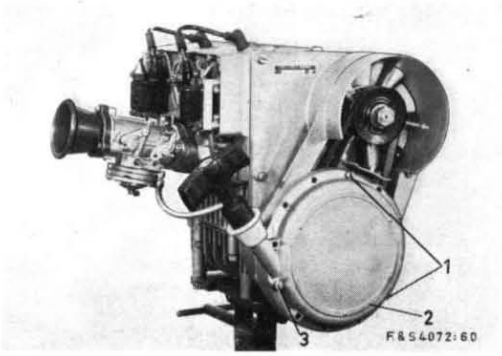

Fig. 50

Electrical Connections

After installing the engine, restore the electrical wires from frame to engine to their terminals.

Fasten cover (with inscription SACHS) to cylinder cover half intake side with 5 fillister head cap screws M 6 x 38 and spring washers, and place rubber boots with ignition leads into the recesses of the cover.

ENGINE WITH BOSCH BENDIX-PINION TYPE ELECTRIC STARTER (Type DG)

The BOSCH Bendix-pinion is an electric, manually operated cranking motor with Bendix drive and overrunning roller clutch.
The energy necessary for operating the starter is taken from a 12 V battery with a capacity of 32...38 Ah.

How the starter works

The pinion with overrunning roller clutch is mounted on a coarse screw thread on the starter spindle. In rest position the pinion is held back and out of engagement by spring tension.

When the starter is switched on, and the motor begins to spin, the weight of the pinion causes it to be left momentarily at a standstill, so that it runs along the spindle and engages with the ring gear teeth, thus providing a positive drive for cranking the engine. As soon as the engine starts, the pinion is driven by the engine, at a speed greater than that of the motor spindle. When the starter switch is released, the pinion is spun back along the screwed spindle, assisted by spring tension, is put out of engagement and returns to rest position.

The overrunning roller clutch prevents premature pinion disengagement.

Removal

Fig. 51

Unscrew starter (1), flange (2) and starter ring gear (3).

Note:

If the teeth of the ring gear (3) are damaged, check the teeth of the starter pinion. If necessary, replace ring gear and pinion.

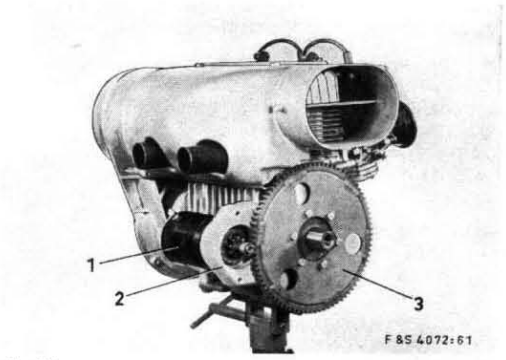

Fig. 51

Fig. 52

Screw with drawal tool (1, repair tool no. 4) onto the hub (2) with 3 fillister head cap screws M 6 x 75 as shown in the illustration.

Place intermediate plate (approx. 5 mm = 0.2 in. thick) between extractor screw and crankpin and remove hub.

Note:

When dismantling the engine completely, watch oil seal p. t. o. side (dimension 45 x 62 x 8).

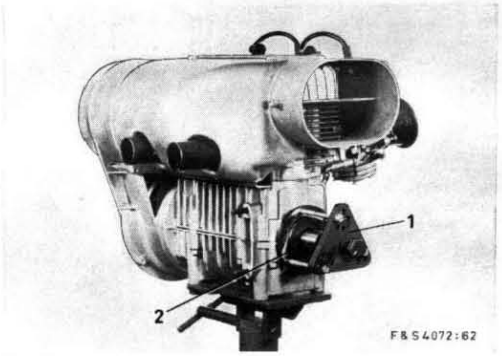

Fig. 52

Installation

Fig. 53

Put hub (1) and sleeve (2) on crankpin.

Screw bolt (3) with nut into crankpin until a stop is encountered. Force the hub on by tightening the nut (4), until a stop is encountered. Unscrew installation equipment.

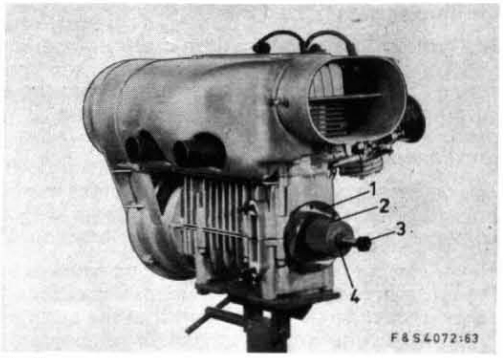

Fig. 53

Fit starter ring gear (3, Fig. 51) by fastening it with 6 hexagon head screws M 6 x 10 with spring washers. Tighten the screws diagonally.

Screw flange (2, Fig. 51) onto the crankcase with 2 nuts M 8 and spring washers.

Screw starter (1, Fig. 51) onto the flange with 2 nuts M 8 and springs washers. Take care to ensure correct position of connecting terminal.

Apply graphite grease (e. g. BOSCH grease Ft 1 v 13) to starter ring gear (3, Fig. 51) and starter pinion (1, Fig. 51).

Operation, maintenance and lubrication of the electric starter

Operation

Do not leave the starter switched on for more than 10 seconds without interruption. Before switching on again, wait 1 minute to allow the starter to cool and the battery to recover. If there is a clashing of teeth, switch off immediately and repeat the process. Release the starter switch as soon as the engine runs under its own power.

If the equipment is not provided with a starter safety device, do not switch on the starter before engine or pinion have come to a standstill. Otherwise pinion and ring gear will be damaged.

If the engine does not start after several attempts, it is useless to try again. This leads only to the exhaustion of the battery. Try to locate the trouble and eliminate it (check above all the fuel feed).

Maintenance

Work on the electric part of the starter may involve short circuits. Therefore it is strongly recommended to detach the ground lead from the battery before doing any work of this kind. Do not lay tools on the battery.

Carbon brushes

The carbon brushes should be checked from time to time. After unscrewing the cover and removing the retainer, the shims and the cover, proceed as follows: raise the spring that presses the carbon brush onto the commutator with a suitable hook (take care not to bend the spring sideways and do not raise it more than necessary); then check whether the carbon brushes can be moved easily within their guides in the brush holder.

The carbon brushes and the brush holder must be free of dust, oil and grease. If these parts are fouled or jammed, clean them with a clean cloth that has been moistened with gasoline (do not use cotton waste because it fuzzes too easily) and dry them well.

Never touch the faces of the carbon brushes with emery paper, files or knives. Blow the brush holder thoroughly clean. If a carbon brush is broken, has become unsoldered or is worn to such an extent that the spring or the strand of wire soldered into the brush threatens to contact the brush holder, replace it. (Use only BOSCH carbon brushes.) When fitting the carbon brushes make sure that the spring does not hit the brush.

When fitting the cover, make sure that the armature shaft and the armature itself are seated properly in the housing and that the carbon brushes rest on the commutator. Fit shims and retainer and fasten the cover.

When giving the engine a general overhaul it is advisable to replace the carbon brushes.

Commutator

The surface of the commutator should be uniformly smooth and grayish black in color. Furthermore it should be free of dust, oil and grease. Fouled commutators should be cleaned with a clean cloth that has been moistened with gasoline (do not use cotton waste); dry well after cleaning. Commutators that have become scored or worn out of round should be turned down on a lathe in a workshop equipped for this purpose. By no means should a commutator be touched with a file or with emery paper.

Lubrication

Lubricate the starter only with suitable lubricants. Adhere to the instructions of the manufacturer (BOSCH).

From time to time the pinion and the ring gear should be cleaned with a brush that has been dipped in gasoline, and greased with graphite grease (e. g. BOSCH Ft 1 v 13). This will prolong their service life.

Starter faults

If starter faults occur it has to be borne in mind that their cause must not necessarily lie with the starter itself nor with a faulty electrical connection of the vehicle's grounding points but that the fuel feed may also be involved. The following trouble-shooting hints are restricted to the actual starter system.

A. When the starter is switched on, the armature shaft does not rotate:

1. Battery discharged,
2. Battery faulty,
3. Battery terminals loose, oxidized, bad ground connection,
4. Starter terminals or brushes grounded,
5. Carbon brushes of starter do not lie on the commutator, are jammed in their guides, are worn, broken, fouled or dirty,
6. Starter switch damaged (loose parts),
7. Voltage loss in leads too great, leads damaged, lead connections loose.

B. When the starter is switched on, the armature shaft rotates, but the engine does not start:

1. Battery insufficiently charged,
2. Pressure of carbon brushes not sufficient,
3. Voltage loss in leads too great.

C. Armature shaft rotates, but pinion does not engage:

1. Pinion dirty,
2. Burr on pinion or ring gear.

D. Pinion fails to disengage after engine has started:

1. Pinion or ring gear teeth very dirty or damaged; spring weak or broken,
2. Starter switch (relay) or starter button does not interrupt the circuit (sustained contact).

INSTRUCTIONS AND WIRING DIAGRAM FOR MAGNETO GENERATOR 12 V 40 W AND 12 V 75 W

The magneto generator produces alternating current of 12 V with a lighting power of 40 or 75 W respectively. If an engine is operated without electric starter the necessary lighting system current is taken from only one of the two connections of the lighting leads (yellow); the second connection remains blind and serves for connecting up a rectifier if a battery is used (see wiring diagram on page 39).

The lamps should be so selected that the magneto generator is loaded to its full nominal output. Otherwise the lamps may burn out.

If in the case of the 75 W equipment the full load of 75 W is not reached, take 40 W lamps and compensate the difference by connecting a resistor 35 W in parallel (F & S part no. 3665 008 000). When replacing wires of the magneto generator, ensure that they have the necessary minimum cross section of 0.75 mm². In order to avoid voltage losses in long leads, use wires of 1.0 mm² cross section for connections at the terminal blocks.

Care should also be taken to ensure a good ground connection from the engine via the chassis to the lamps.

The following are the symbols used in the wiring diagram on page 37.

A_8 = Lighting load (12 V 40 W)
A_9 = Resistance (12 V 35 W, for 75 W system with 40 W light)
B_{10} = Ignition/light/start switch
C = Magneto generator
C_3 = Generator armatures
C_6 = Ignition armatures (primary)
C_9 = Ignition coils (external)
C_{10} = Spark plugs
C_{16} = Terminal blocks
C_{17} = Lighting leads (yellow)
C_{18} = Ground wire (brown)
C_{19} = Short-circuit leads
C_{20} = Primary lead cylinder 1 (blue)
C_{21} = Primary lead cylinder 2 (blue/yellow)

Terminals:

Ignition coils:
1 = Primary lead connection
15 = Ground connection

Ignition/light/start switch:
31 = Short-circuit lead connection
31b = Short-circuit lead connection
50 = Connection remains blind
53 = Lighting lead connection
53a = Connection remains blind
53c = Generator load connection

Switch positions:
0 = Off (ignition short-circuited)
I = Night driving
II = Daylight driving
III = Electric start (provided)

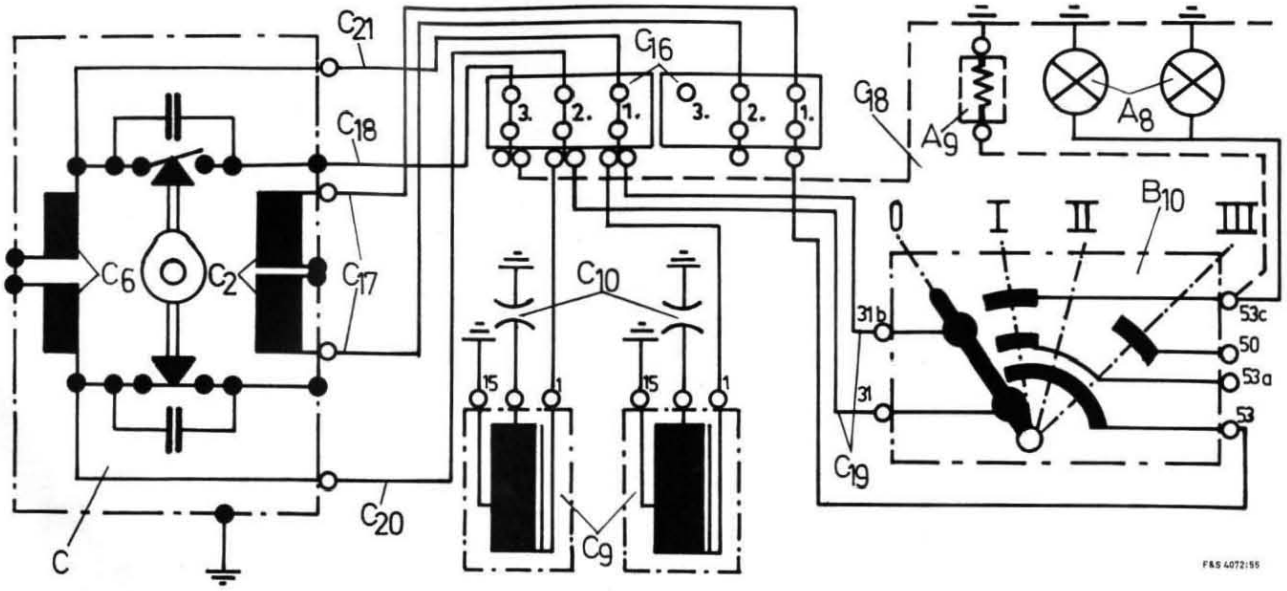
C21
C18
C17
C20
C6
C2
C
C16
3.
2.
1.
C10
15
1
C9
C18
A9
A8
B10
0
I
II
III
31b
31
C19
53c
50
53a
53
F&S 4072:55

Fig. 54

INSTRUCTIONS AND WIRING DIAGRAM FOR MAGNETO GENERATOR 12 V 75 W AND BOSCH BENDIX-PINION TYPE ELECTRIC STARTER
(Type DG)

The magneto generator produces alternating current of 12 V with a lighting power of 75 W.

The two yellow lighting leads are connected to the rectifier for charging a 12 V 32...38 Ah battery for lighting and electric starter operation (see wiring diagram on page 39).

During daylight driving only 1 circuit is connected up, in order to avoid overcharging of the battery; during night driving, both circuits are connected up.

The lamps should be so selected that the total load is 50 W.

When replacing wires in the magneto generator, ensure that they have the necessary minimum cross section of 0.75 mm². In order to avoid voltage losses in long leads, wires of 1.0 mm² cross section should be used for connections at the terminal blocks.

For battery and starter connection use the following wire cross sections: 16 mm² if the length of the lead is less than 1 m, and 25 mm² if the length of the lead is more than 1 m.

Care should also be taken to ensure a good ground connection from the engine via the chassis to the lamps.

The following are the symbols used in the wiring diagram on page 39.

A_8 = Load (12 V 50 W)
B_{10} = Ignition/light/start switch
C = Magneto generator
C_2 = Generator armatures
C_6 = Ignition armatures (primary)
C_9 = Ignition coils (external)
C_{10} = Spark plugs
C_{11} = Battery (12 V 32...38 Ah)
C_{13} = Rectifier
C_{16} = Terminal blocks
C_{17} = Lighting leads (yellow)
C_{18} = Ground wire (brown)
C_{19} = Short-circuit leads
C_{20} = Primary lead cylinder 1 (blue)
C_{21} = Primary lead cylinder 2 (blue/yellow)
E = Electric starter
E_1 = Starter relay
S = Fuses (4 Amps)

Terminals:
Ignition coils:
1 = Primary lead connection
15 = Ground wire connection

Ignition/light/start switch:
31 = Short-circuit lead connection
31b = Short-circuit lead connection
50 = Control lead (starter relay) and lighting lead connection (d. c.)
53 = Connection: battery +
53 = Lighting lead connection (d. c.)
53c = Connection: load (12 V 50 W)

Rectifier:
51 = Lighting lead connection (a. c.)
53 = Lighting lead connection (d. c.)

Starter relay:
86 = Control lead connection
88 = Connection: battery +
88a = Connection electric starter

Switch positions:
0 = Off (ignition short-circuited)
I = Night driving
II = Daylight driving
III = Electric start

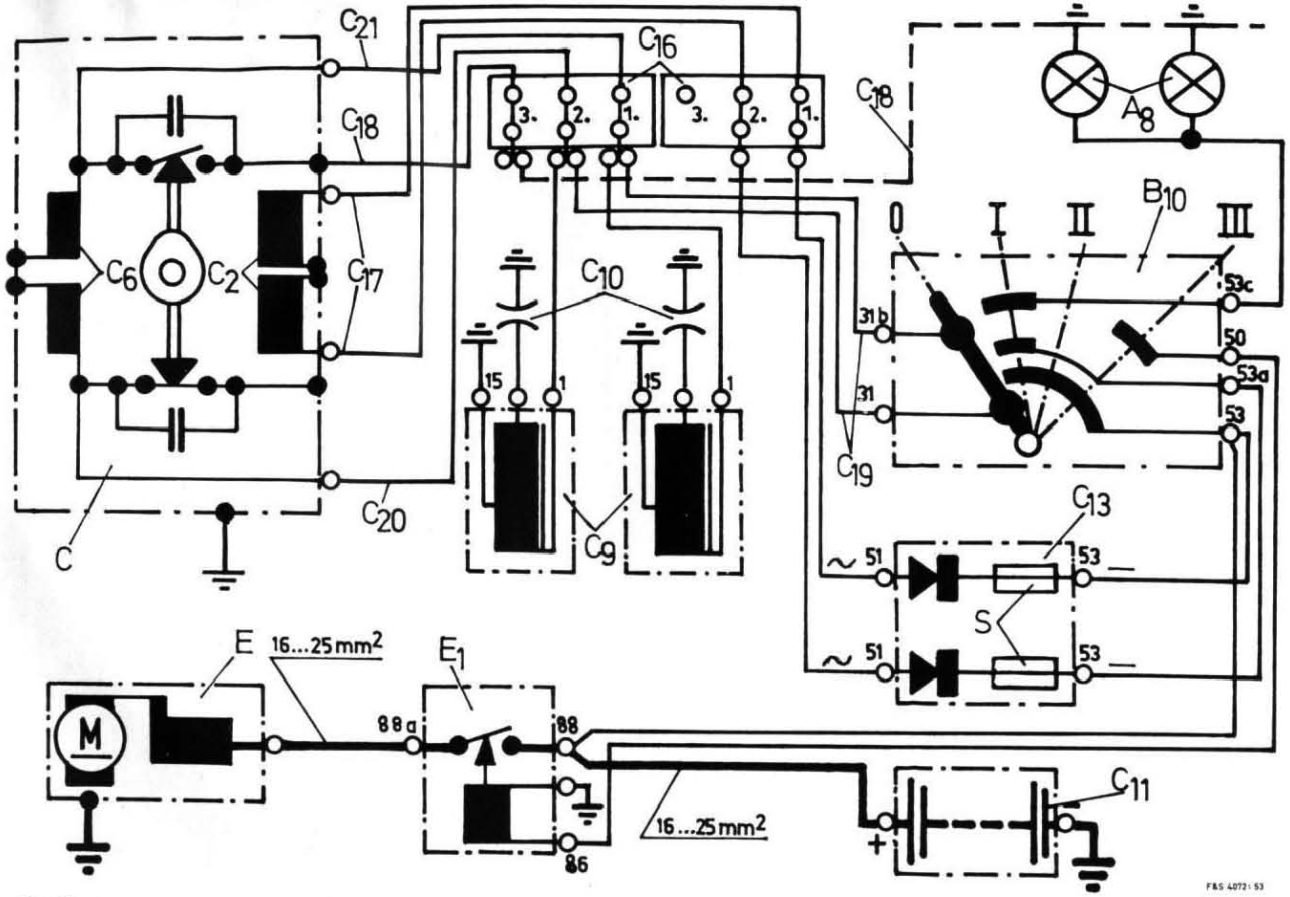
C21
C16
C18
C18
A8
B10
0
I
II
III
3.
2.
1.
3.
2.
1.
C6
C2
C17
C10
15
1
15
1
31b
31
53c
50
53a
53
C19
C13
C20
C9
C
51
53
S
51
53
E
16...25mm2
E1
M
88a
88
86
16...25mm2
C11
+
F&S 4072 : 53

Fig. 55

TEST-RUNNING AND RUNNING-IN PERIOD

Start the engine and let it warm up (release the choke as soon as the engine starts).

Final adjustment of carburettor

Adjust the desired idling speed of the engine by means of the idling adjustment screw.

Then slowly vary the setting of the adjusting screw of the idling jet (3, Fig. 29) so that the engine speed increases smoothly when the throttle is opened. The main jet (1, Fig. 28) is correctly adjusted when the engine gives satisfactory two-stroke operation under load and only slight fumes are discharged from the exhaust. If there is excessive exhaust smoke under load, turn main jet adjusting screw clockwise (closing it) until excessive smoking stops and the engine runs satisfactorily.

If the idling speed fluctuates too much or is too high, turn the idling jet adjusting screw anti-clockwise (to open the jet) until the engine runs smoothly without beginning to discharge more smoke from the exhaust.

Running-in period

Even the finely machined surfaces of pistons and cylinders are not so smooth as the surfaces of parts which have been sliding against one another for some time. For this reason every piston requires to be run in during the initial period of operation. This does not call for any special precuations, however, but simply means that the engine should not be required to give its maximum output during the first 20...30 hours of operation. No special gasoline/oil mixture is required during the running-in period, and there is no need to add any special oils.

LAYING UP THE ENGINE

If the engine is not used over a longer period of time (e. g. over the summer) there is a danger of rusting. For such cases we give you the following instructions regarding the preservation of the engine.

1. Mix the fuel with a running-in or anti-corrosion oil in 25 : 1 proportion and run the engine on this mixture for a short while. We recommend oils with a viscosity grade of SAE 30 supplied by well-known oil companies (e. g. ENSIS Oil 30 supplied by SHELL).

   After the last run the engine should be stopped at full engine speed by means of the short-circuit switch. At the same time the choke on the carburettor should be closed. When the engine has stopped, close the fuel tap.

   Thus the crankshaft, the connecting rods and the main bearings are sufficiently protected against corrosion.

2. To protect the cylinder barrels and the pistons, place the pistons at TDC, remove the spark plugs and pour 3...5 cc of anti-corrosion oil into the spark plug holes. Then turn the engine over 15...20 times by means of the starter and restore the plugs.

3. For outside protection of the engine we recommend anti-corrosion oils of well-known oil companies, such as:

   Anticorit MR 5 of Messrs. FUCHS, D-6800 Mannheim/Germany
   Lubrication Oil MIL-L 644 B of MOBIL OIL
   Shell ENSIS Fluid 260 of SHELL
   RUST BAN 395 of ESSO.

If the engine is laid up for more than 6 months with fuel in the tank, the fuel/oil mixture may separate. In such cases we strongly recommend to remix the fuel/oil mixture by stirring or to replace the mixture altogether.

LUBRICATION AND MAINTENANCE CHART

Maintenance or lubrication point	Lubricant, maintenance operations	Maintenance ▶ Daily	Every 100 hours of operation	Every 200 hours of operation	If required
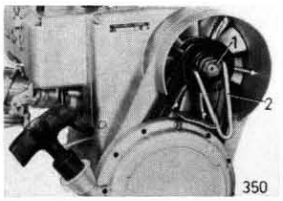 350	**Checking the V-belt** If one presses against the V-belt with one's thumb, it should yield approx. 1.5 cm (0.6 in.). It should not show marks of excessive wear.		X		
	Retightening the V-belt The correct tension of the V-belt is achieved by taking out or inserting shims between the two pulley halves. Tension is increased by taking out shims, and diminished by inserting additional shims. Newly fitted V-belts have a tendency to stretch. They should be checked after approx. 20 hrs of operation, and retightened if necessary. Use retaining fork (2) for unscrewing and tightening nut (1). Tightening torque 4.0...4.5 kpm (28.9...32.5 ft. lb.)				X
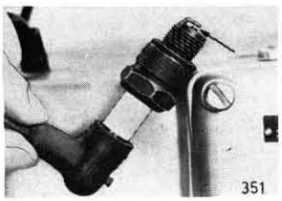 351	**Spark plug** A provisional cleaning of the spark plug from carbon residue can be made on the insulator body and between the electrodes. An efficient cleaning can only be achieved by means of a sandblast unit.	If very dirty			
	Functional check Unscrew spark plug, fit spark plug terminal, put spark plug thread into ground contact (fan housing) and operate starter. If the spark plug is in good order, a strong spark must flash across the electrodes. Gap between electrodes 0.5 mm (0.020 in.), see arrow.				X
Ignition system	Check and, if necessary, adjust contact-breaker.		X		
	Apply BOSCH Ft 1 v 4 special grease to lubricating pad for contact-breaker cam.			X	
Engine and exhaust system	Decarbonize (see page 22)			X	
Carburettor	Clean and adjust (see page 18)				X
Fuel strainer	Clean fuel strainer and exchange filter element, if fitted.				X
Cylinder, connecting rod bearings, crankshaft bearings	Lubrication by two-stroke mixture, i. e. commercial HD grades SAE 40 or 50 of leading oil companies (which correspond to the API classifications MS and MIL-L 2104 C) mixed with commercial brands of gasoline at a ratio of 1 : 25. Or use SACHS Special Motor Oil (F & S Part No. 0263 005 100) which is available in cans.				

TIGHTENING TORQUES FOR BOLTS AND NUTS

Bolts

F & S No.	Qty.	Used on	Dimension	Tightening torque
0940 120 200	4	Magneto ring	AM 6 x 10	0.9...1.1 kpm *) (6.5...8.0 ft. lb.)
0941 054 000	4	Fan housing	M 8 x 25	1.5...2.0 kpm (10.8...14.4 ft. lb.)
3640 002 002	2	Cylinder cover half intake side	AM 6 x 30	0.5...0.6 kpm (3.6...4.3 ft. lb.)
0940 128 202	1	Cylinder cover half exhaust side	BM 6 x 75	1.5...2.0 kpm (10.8...14.4 ft. lb.)
0240 076 000	2	Armature plate	AM 5 x 15	0.4...0.5 kpm (2.9...3.6 ft. lb.)
0940 008 003	3	V-pulley	AM 6 x 15	0.8...1.1 kpm (5.8...8.0 ft. lb.)

Nuts

F & S No.	Qty.	Used on	Dimension	Tightening torque
2842 003 004	12	Crankcase	M 8	2.3...2.8 kpm (16.6...20.3 ft. lb.)
2842 003 004	4	Cylinder and cylinder head	M 8	2.8...3.0 kpm (20.3...21.7 ft. lb.)
3642 002 001	4	Cylinder and cylinder head	M 8 x 27	2.8...3.0 kpm (20.3...21.7 ft. lb.)
1342 003 004	2	Carburettor	M 8	0.8...1.1 kpm (5.8...8.0 ft. lb.)
0942 020 001	1	Magneto flywheel	M 14 x 1.5	11.0...12.0 kpm (79.6...86.8 ft. lb.)
0942 020 001	1	V-pulley	M 14 x 1.5	4.0...4.5 kpm (28.9...32.5 ft. lb.)

*) Bolt/nut degreased with Tri and luted with LOCTITE AA-89-790

TROUBLE-SHOOTING CHART

The following is a list of engine faults that may possibly occur.

A. Engine does not start

There is no spark because

1. Spark plug fouled, wet, bridged or damaged,
2. Spark plug wet (outside),
3. Ignition lead loose or broken,
4. Short-circuit switch jams or leads from engine damaged,
5. Contact breaker points oiled up, wet or pitted,
6. Ignition armature or capacitor damaged.

No fuel feed because

1. No fuel in tank,
2. Fuel tap closed,
3. Fuel strainer dirty,
4. Fuel line jammed,
5. Jets blocked,
6. Impulse pipe leaking.

Mixture not ignitable because

1. Carburettor excessively flooded,
2. Water in carburettor,
3. Air infiltrating through loose carburettor.

No compression because

1. Piston rings broken,
2. Piston and cylinder excessively worn,
3. Cylinder head or spark plug loose.

B. Engine power drops

Due to dirt because

1. Exhaust and transfer ports in cylinders clogged with carbon,
2. Thick carbon build-up in cylinder heads,
3. Fuel tank not vented (filler cap),
4. Spark plugs vitrified.

Due to lack of compression

(see above under "No compression because").

C. Other engine troubles

Engine runs irregularly because

1. Ignition leads loose or damaged,
2. Engine gets too hot, causing vapor lock,
3. Contact breaker points oiled up or pitted,
4. Pivot shaft for contact breaker arm worn,
5. Spark plug or terminal or ignition armature not in order.

Engine four-strokes and does not pick up speed because

1. Choke closed,
2. Carburettor flooded because inlet needle seat dirty or worn.
3. Exhaust ports clogged with carbon,
4. Carburettor not correctly adjusted or jets loose.

Engine develops pinking at full speed under load because

1. Too much spark advance,
2. Carbon layer in combustion chambers too thick,
3. Cooling fins dirty.

Engine pops or sneezes into carburettor because

1. Engine not getting enough fuel,
2. Spark plug incandescent due to wrong heat grade,
3. Spark plug bridged, dirty or vitrified,
4. Engine getting false air,
5. Water in carburettor.

Engine gets too hot, pistons seize, because

1. Engine incorrectly decarbonized (piston tops cleaned bright),
2. Engine not getting enough fuel,
3. Carburettor not adjusted correctly or wrong oil used,
4. Cooling fins on cylinders and cylinder heads dirty,
5. Pre-ignitions occur,
6. V-belt slipping.

Engine does not idle because

1. Idling adjustment screw or idling stop screw not adjusted correctly,
2. Cable control for butterfly valve not adjusted correctly,
3. Ignition armature damaged.

Fuel consumption too high because

1. Fuel tank, fuel line or carburettor leaking,
2. Jet openings too large.

Printed in Germany

701220