YAMAHA

'71, '72, '73 MODEL SPECIFICATIONS

and

SL338D/GP338/SL433B/EL433B
SW433C/EW433C/GP433B

SERVICE MANUAL

YAMAHA MOTOR CO., LTD.

NOTICE

This manual has been written by Yamaha Motor Company for use by Authorized Yamaha Dealers and their qualified mechanics. In light of this purpose it has been assumed that certain basic mechanical precepts and procedures inherent to our product are already known and understood by the reader.

Without such basic knowledge, repairs or service to this model may render the machine unsafe, and for this reason we must advise that all repairs and/or service be performed by an Authorized Yamaha dealer who is in possession of the requisite basic product knowledge.

Other information is produced by the U.S. distributor, Yamaha international Corporation, and is necessary to provide total technical coverage regarding the product.

* *

The Research, Engineering, and Service Departments of Yamaha are continually striving to further improve all models manufactured by the company. Modifications are therefore inevitable and changes in specifications or procedures will be forwarded to all Authorized Yamaha Dealers and will, where applicable, appear in future editions of this manual.

YAMAHA SW433C, SL433B, EL433B, EW433C, GP433B, SL338D, GP338 SERVICE MANUAL

1st Edition

JUNE 1972

SERVICE DEPARTMENT

YAMAHA MOTOR COMPANY

HAMAMATSU, JAPAN

FOREWORD

The Service Manual for this year's Yamaha snowmobiles is divided into two volumes for Single-Cylinder Models and Twin-Cylinder Models. These two books will be used as the basic service manuals for this year's models.

This manual contains service information for standard and GP models having twin cylinders ranging from 338 c.c. to 433 c.c. It also includes specifications of 1971 to 1973 models for convenience of Yamaha service technicians.

YAMAHA MOTOR CO., LTD.
SERVICE DEPARTMENT

CONTENTS

CHAPTER 1. GENERAL 1
1–1 Features 1
1–2 Specifications 2
1–3 Tools 23
1–4 Operation 25

CHAPTER 2. ENGINE 26
2–1 Engine Removal 26
2–2 Starter and Magneto Removal 34
2–3 Removal of Primary Sheaves 37
2–4 Removing the Oil Pump 38
2–5 Removal of Flywheel Magneto 43
2–6 Removal of Fancase and Air Shroud 45
2–7 Removal of Top End 47
2–8 Top End Reassembling Crankshaft Assembly 49

CHAPTER 3. POWER TRAIN 52
3–1 Disc Brakes and Secondary Sheaves 52
3–2 Quick Change EL433B, SW433C, GP433B, EW433C 56
3–3 Chain Case and Front Axle Removal 60
3–4 Front Axle Installation 63
3–5 Bogie Wheels 66
3–6 Rear Axle Removal 66
3–7 Track Removal 68

CHAPTER 4. STEERING (SKIS) AND CHASSIS 70
4–1 Steering 70
4–2 Skis 70
4–3 Chassis and Shroud 71
4–4 Seat 71
4–5 Luggage Box 71

CHAPTER 5. TIGHTENING BOLTS AND NUTS 72

CHAPTER 6. ELECTRICAL 73
6–1 Ignition System 73
6–2 Lighting System 73
6–3 Wiring Circuit 73

CHAPTER 7. ENGINE MAINTENANCE 75
7–1 Ignition Timing 75
7–2 Carburetion and Fuel System 77
7–3 Autolube 89
7–4 Top End Maintenance 92
7–5 Piston and Piston Ring Maintenance (GP338, GP433B) 95

CHAPTER 8. DRIVE TRAIN AND CHASSIS MAINTENANCE 97
8–1 Primary Sheaves 97
8–2 Secondary Sheaves 97
8–3 Drive-Belt 97
8–4 Primary Sheave and Secondary Sheave Alignment 97
8–5 Chain and Chain Case 101
8–6 Brakes 101
8–7 Track 102
8–8 Adjusting the Track 102
8–9 Skis 102

APPENDIX 1. INSPECTION AND MAINTENANCE 104

APPENDIX 2. CONVERSION TABLE 105

CHAPTER 1. GENERAL

1–1 FEATURES

1. Optimum Engine Performance

The new, exclusive, five-port cylinder design is being used in this year's model to insure optimum performance. The five-port system innovated by the Yamaha engineers has already proven itself in many fields of competition.

2. Increased Engine Reliability and Economy

As another first in the industry. Yamaha has introduced its already proven Autolube oil injection system in Yamaha snowmobile engines. The Autolube system will insure long engine life and also result in a decrease in operational and maintenance costs.

3. Smooth and Positive Clutch System

Yamaha snowmobiles have an improved automatic centrifugal clutch and power train system. The new clutch allows the engine to achieve the most usable r.p.m.s under all operating conditions. The drive ratio will vary from 3.5 : 1 – 1 : 1 thus giving maximum acceleration and climbing ability.

4. Diaphragm Carburetor

Yamaha snowmobiles have one diaphragm-type carburetor. These carburetors incorporate an internal metering device which always meters the correct air/fuel mixture to the engine regardless of vibration or machine position.

5. Superior Braking

A new design in the track, sprocket, V-belt and caliper disc brake has greatly improved the braking efficiency and safety of the Yamaha snowmobile.

6. Tilt-up Engine Shroud

The attractive fiberglass engine shround has been designed to tilt-up and away from the engine. This functional feature allows for engine maintenance.

7. Engine Cowl

The engine cowl covers the rear of the engine to protect the driver from the dirt and noise of engine operation. This cowl is also easily removable.

8. Superior Comfort

The suspension system of the main track rides on individually mounted torsion spring bogie wheels. The adjustable torsion springs of the rear pivot arm of the track, in combination with the attractive and durable seat, assure tireless comfort even on the longest trips.

9. Quick Change

Gears can readily be shifted into high or low by simply operating the quick change lever depending on the conditions of a running course.

The gear ratio of high position sprocket to low position sprocket is 1.6 : 1.

1–2 SPECIFICATIONS

'73 Models

MODEL	SL338D	GP338
Dimensions and Weight:		
Length (W/Skis)	105.5 in. (2,680 mm)	105.5 in. (2,680 mm)
Width	34.7 in. (880 mm)	34.7 in. (880 mm)
Height (W/Windhsield)	40.6 in. (1,030 mm)	39.0 in. (990 mm)
Weight (approx.)	363 lbs. (165 kg)	358 lbs. (162 kg)
Engine:		
Type	Air cooled two-stroke, 5-port induction Cast iron sleeves, Aluminum cylinders	Air cooled two-stroke, 5-port induction Cast iron sleeves, Aluminum cylinders
No. of cylinders	2 cylinders, parallel	2 cylinders, parallel
Bore and stroke	2.362 in. x 2.346 in. (60 mm x 59.6 mm)	2.362 in. x 2.346 in. (60 mm x 59.6 mm)
Displacement	20.62 cu.in. (338 c.c.)	20.62 cu.in. (338 c.c.)
Max. horse power	24 H.P. @5,500 r.p.m.	32 H.P. @6,000 r.p.m.
Carburetor	KEIHIN CD42-38 x 1	KEIHIN CD38-30 x 2
Lubrication system	"Autolube" oil injection	"Autolube" oil injection
Ignition method	Flywheel magneto	Flywheel magneto
Magneto output	12V - 70W @3,000 r.p.m.	12V - 70W @3,000 r.p.m.
Spark plug	B-7HS (N.G.K)	N.G.K B-8EV
Starting System:	Manual recoil starter with add'l emergency rope starter	Manual recoil starter with add'l emergency rope starter
Track and Suspension:		
Track	Molded rubber, steel reinforced	Molded rubber, steel reinforced
Width	15 in. (380 mm)	15 in. (380 mm)
Length on ground	50 in. (1,270 mm)	50 in. (1,270 mm)
Suspension wheels	12 rubber wheel bearing mounted	12 rubber wheels bearing mounted
Drive sprocket	Single, polyurethane, 9 teeth	Single, polyurethane, 9 teeth
Wheel sprocket	Single, polyurethane, 9 teeth	Single, polyurethane, 9 teeth
Transmission:		
Type	Automatic centrifugal engagement, infinitely variable 3.5 : 1 – 1 : 1	Automatic centrifugal engagement, infinitely variable 3.5 : 1 – 1 : 1
Drive	Duplex roller chain enclosed in oil bath	Duplex roller chain enclosed in oil bath
Reduction ratio	25/13 (1.923 : 1)	25/14 (1.786 : 1)
Frame:		
Type	Fabricated steel	Fabricated steel
Cowl:		
Type	Reinforced fiberglass (removable)	Reinforced fiberglass (removable)
Engine Cowl:	Yes	–
Seat:	Removable	Removable
Storage Box:	Fiberglass reinforced in the engine room	Fiberglass reinforced in the engine room
Fuel Tank:		
Capacity	5.0 US.gal (19.0 ℓ)	5.0 US.gal (19.0 ℓ)
Oil Tank:		
Capacity	2.1 US.qt (2.0 ℓ)	2.1 US.qt (2.0 ℓ)
Front Bumper:	Chromed tubular steel	Chromed tubular steel
Rear Bumper:	Chromed tubular steel	Chromed tubular steel

MODEL	SL338D	GP338
Electrical:		
Headlight	12V - 60/60W Hi-Lo beam	12V - 60/60W Hi-Lo beam
Taillight	12V - 8W (rectangular)	12V - 8W (rectangular)
Stoplight	12V - 23W (incorporated in taillight)	12V - 23W (incorporated in taillight)
Ignition key switch	4 position on dash	4 position on dash
Brake:		
Type	Disc brake	Disc brake
Control	Handle lever, left-hand operated	Handle lever, left-hand operated
Throttle:		
Type	Handle lever, right-hand operated	Handle lever, right-hand operated
Accessories:		
Emergency starter rope	Yes	Yes
Tool kit	Yes	Yes

'73 Models

MODEL	SW433C	SL433B
Dimensions and Weight:		
Length (W/Skis)	105.5 in. (2,680 mm)	105.5 in. (2,680 mm)
Width	37.6 in. (955 mm)	34.7 in. (880 mm)
Height (W/Windshield)	41.9 in. (1,065 mm)	40.6 in. (1,030 mm)
Weight (approx.)	403 lbs. (183 kg)	365 lbs. (166 kg)
Engine:		
Type	Air cooled two-stroke 5-port induction Cast iron sleeves, Aluminum cylinders	Air cooled two-stroke 5-port induction Cast iron sleeves, Aluminum cylinders
No. of cylinders	2 cylinders, parallel	2 cylinders, parallel
Bore and stroke	2.677 in. x 2.346 in. (68 mm x 59.6 mm)	2.677 in. x 2.346 in. (68 mm x 59.6 mm)
Displacement	26.42 cu.in. (433 c.c.)	26.42 cu.in. (433 c.c.)
Max. horse power	30 H.P. @5,500 r.p.m.	30 H.P. @5,500 r.p.m.
Carburetor	KEIHIN CD42-38 x 1	KEIHIN CD42-38 x 1
Lubrication system	"Autolube" oil injection	"Autolube" oil injection
Ignition method	Flywheel magneto	Flywheel magneto
Magneto output	12V - 70W @3,000 r.p.m.	12V - 70W @3,000 r.p.m.
Spark plug	B-7HS (N.G.K)	B-7HS (N.G.K)
Starting System:	Manual recoil starter with addl' emergency rope starter	Manual recoil starter with add'l emergency rope starter
Track and Suspension:		
Track	Molded rubber, steel reinforced	Molded rubber, steel reinforced
Width	15 in. (380 mm)	15 in. (380 mm)
Length on ground	50 in. (1,270 mm)	50 in. (1,270 mm)
Suspension wheels	12 rubber wheels bearing mounted	12 rubber wheels bearing mounted
Drive sprocket	Single, polyurethane, 9 teeth	Single, polyurethane, 9 teeth
Wheel sprocket	Single, polyurethane, 9 teeth	Single, polyurethane, 9 teeth
Transmission:		
Type	Automatic centrifugal engagement, infinitely variable 3.5 : 1 – 1 : 1	Automatic centrifugal engagement, infinitely variable 3.5 : 1 – 1 : 1
Drive	Duplex roller chain enclosed in oil bath	Duplex roller chain enclosed in oil bath
Reduction ratio	Hi 25/14 (1.786 : 1) Lo 25/14 x 1.6 (2.855 : 1)	25/14 (1.786)
Frame:		
Type	Fabricated steel	Fabricated steel
Cowl:		
Type	Reinforced fiberglass (removable)	Reinforced fiberglass (removable)
Engine Cowl:	Yes	Yes
Seat:	Removable	Removable
Storage Box:	Fiberglass reinforced in the engine room	Fiberglass reinforced in the engine room
Fuel Tank:		
Capacity	6.0 US.gal (23.0 ℓ)	5.0 US.gal (19.0 ℓ)
Oil Tank:		
Capacity	2.1 US.qt (2.0 ℓ)	2.1 US.qt (2.0 ℓ)
Front Bumper:	Chromed tubular steel	Chromed tubular steel
Rear Bumper:	Chromed tubular steel	Chromed tubular steel

MODEL	SW433C	SL433B
Electrical:		
Headlight	12V - 60/60W Hi-Lo beam	12V - 60/60W Hi-Lo beam
Taillight	12V - 8W (rectangular)	12V - 8W (rectangular)
Stoplight	12V - 23W (incorporated in taillight)	12V - 23W (incorporated in taillight)
Ignition key switch	4 position on dash	4 position on dash
Brake:		
Type	Disc brake	Disc brake
Control	Handle lever, left-hand operated	Handle lever, left-hand operated
Throttle:		
Type	Handle lever, right-hand operated	Handle lever, right-hand operated
Accessories:		
Emergency starter rope	Yes	Yes
Tool kit	Yes	Yes

'73 Models

MODEL	EL433B	EW433C	GP433B
Dimensions and Weight:			
Length (W/Skis)	105.5 in. (2,680 mm)	105.5 in. (2,680 mm)	105.5 in. (2,680 mm)
Width	34.7 in. (880 mm)	37.6 in. (955 mm)	34.7 in. (880 mm)
Height (W/Windshield)	40.6 in. (1,035 mm)	45.9 in. (1,165 mm)	39.0 in. (990 mm)
Weight (approx.)	400 lbs. (181 kg)	431 lbs. (196 kg)	365 lbs. (166 kg)
Engine:			
Type	Air cooled two-stroke, 5-port induction, Cast iron sleeves, Aluminum cylinders	Air cooled two-stroke, 5-port induction, Cast iron sleeves, Aluminum cylinders	Air cooled two-stroke, 5-port induction, Cast iron sleeves, Aluminum cylinders
No. of cylinders	2 cylinders, parallel	2 cylinders, parallel	2 cylinders, parallel
Bore and stroke	2.677 in. x 2.346 in. (68 mm x 59.6 mm)	2.677 in. x 2.346 in. (68 mm x 59.6 mm)	2.677 in. x 2.346 in. (68 mm x 59.6 mm)
Displacement	30 H.P @5,500 r.p.m.	30 H.P @5,500 r.p.m.	38 H.P @6,000 r.p.m.
Carburetor	KEIHIN CD42-38 x 1	KEIHIN CD42-38 x 1	KEIHIN CD38-32 x 2
Lubrication system	"Autolube" oil injection	"Autolube" oil injection	"Autolube" oil injection
Ignition method	Flywheel magneto	Flywheel magneto	Flywheel magneto
Magneto output	12V - 70W @3,000 r.p.m.	12V - 70W @3,000 r.p.m.	12V - 70W @3,000 r.p.m.
Spark plug	B-7HS (N.G.K)	B-7HS (N.G.K)	N-3G (Champion)
Starting System:	Electric starter Manual recoil starter with add'l emergency rope starter	Electric starter Manual recoil starter with add'l emergency rope starter	Manual recoil starter with add'l emergency rope starter
Track and Suspension:			
Track	Molded rubber, steel reinforced	Molded rubber, steel reinforced	Molded rubber, steel reinforced
Width	15 in. (380 mm)	18 in. (457 mm)	15 in. (380 mm)
Length on ground	50 in. (1,270 mm)	50 in. (1,270 mm)	50 in. (1,270 mm)
Suspension wheel	12 rubber wheels bearing mounted	12 rubber wheels bearing mounted	12 rubber wheels bearing mounted
Drive sprocket	Single, polyurethane, 9 teeth	Single, polyurethane, 9 teeth	Single, polyurethane, 9 teeth
Wheel sprocket	Single, polyurethane, 9 teeth	Single, polyurethane, 9 teeth	Single, polyurethane, 9 teeth
Transmission:			
Type	Automatic centrifugal engagement infinitely variable 3.5 : 1 – 1 : 1	Automatic centrifugal engagement infinitely variable 3.5 : 1 – 1 : 1	Automatic centrifugal engagement infinitely variable 3.5 : 1 – 1 : 1
Drive	Duplex roller chain enclosed in oil bath	Duplex roller chain enclosed in oil bath	Duplex roller chain enclosed in oil bath
Reduction ratio	Hi 25/14 (1.857 : 1) Lo 25/14 x 1.6 (2.855 : 1)	Hi 25/14 (1.786 : 1) Lo 25/14 x 1.6 (2.855 : 1)	Hi 23/14 (1.643 : 1) Lo 23/14 x 1.6 (2.628 : 1)
Frame:			
Type	Fabricated steel	Fabricated steel	Fabricated steel
Cowl:			
Type	Reinforced fiberglass (removable)	Reinforced fiberglass (removable)	Reinforced fiberglass (removable)
Engine Cowl:	Yes	Yes	–
Seat:	Removable	Removable	Removable
Storage Box:	Fiberglass reinforced in the engine room	Fiberglass reinforced in the engine room	Fiberglass reinforced in the engine room
Fuel Tank:			
Capacity	5.0 US.gal (19.0 ℓ)	6.0 US.gal (23.0 ℓ)	5.0 US.gal (19.0 ℓ)

MODEL	EL433B	EW433C	GP433B
Oil Tank: Capacity	2.1 US.qt (2.0 ℓ)	2.1 US.qt (2.0 ℓ)	2.1 US.qt (2.0 ℓ)
Front Bumper:	Chromed tubular steel	Chromed tubular steel	Chromed tubular steel
Rear Bumper:	Chromed tubular steel	Chromed tubular steel	Chromed tubular steel
Electrical: Headlight Taillight Stop light Ignition key switch	 12V - 60/60W Hi-Lo beam 12V - 8W (rectangular) 12V - 23W (incorporated in taillight) 4 position on dash	 12V - 60/60W Hi-Lo beam 12V - 8W (rectangular) 12V - 23W (incorporated in taillight) 4 position on dash	 12V - 60/60W Hi-Lo beam 12V - 8W (rectangular) 12V - 23W (incorporated in tailllight) 4 position on dash
Brake: Type Control	 Disc brake Handle lever, left-hand operated	 Disc brake Handle lever, left-hand operated	 Disc brake Handle lever, left-hand operated
Throttle: Type	 Handle lever, right-hand operated	 Handle lever, right-hand operated	 Handle lever, right-hand operated
Accessories: Emergency starter rope Tool kit	 Yes Yes	 Yes Yes	 Yes Yes

'71 Models

MODEL	SL338B	SW396
Dimensions and Weight:		
Length (W/Skis)	99-1/2 in. (2,526 mm)	99-1/2 in. (2,526 mm)
Width	32 in. (815 mm)	36-1/2 in. (925 mm)
Height (W/Windshield)	38 in. (965 mm)	40-3/4 in. (1,035 mm)
Weight (approx.)	348 lbs. (158 kg)	379 lbs. (172 kg)
Engine:		
Type	Air cooled two-stroke 5-port induction Cast iron sleeves, Aluminum cylinders	Air cooled two-stroke 5-port induction Cast iron sleeves, Aluminum cylinders
No. of cylinders	2 cylinders, parallel	2 cylinders, parallel
Bore and stroke	2.34 x 2.35 in. (60 x 59.6 mm) each	2.56 x 2.35 in. (65 x 59.6 mm) each
Displacement	20.6 cu.in. (338 c.c.)	24.1 cu.in. (396 c.c.)
Max. horse power	24 BHP @5,500 r.p.m.	27 BHP @5,500 r.p.m.
Carburetor	One (diaphragm-type), KEIHIN	One (diaphragm-type), MIKUNI
Lubrication system	"Autolube" oil injection	"Autolube" oil injection
Ignition method	Flywheel magneto	Flywheel magneto
Magneto output	12V - 40W @3,000 r.p.m.	12V - 40W @3,000 r.p.m.
Spark plug	B-7Hz (N.G.K)	B-7Hz (N.G.K)
Starting System:	Manual recoil starter with add'l emergency rope starter	Manual recoil starter with add'l emergency rope starter
Track and Suspension:		
Track	Molded rubber, steel reinforced	Molded rubber, steel reinforced
Width	15 in. (380 mm)	18 in. (457 mm)
Length on ground	50 in. (1,270 mm)	50 in. (1,270 mm)
Suspension wheels	12 rubber wheels bearing mounted	12 rubber wheels bearing mounted
Drive sprocket	Single, polyurethane, 9 teeth	Single, polyurethane, 9 teeth
Wheel sprocket	Single, polyurethane, 9 teeth	Single, polyurethane, 9 teeth
Transmission:		
Type	Automatic centrifugal engagement, infinitely variable 3.5 : 1 – 1 : 1	Automatic centrifugal engagement, infinitely variable 3.5 : 1 – 1 : 1
Drive	Duplex roller chain enclosed in oil bath	Duplex roller chain enclosed in oil bath
Reduction ratio	25/13 (1.923 : 1)	25/13 (1.923 : 1)
Frame:		
Type	Fabricated steel	Fabricated steel
Cowl:		
Type	Reinforced fiberglass (removable)	Reinforced fiberglass (removable)
Engine Cowl:	Yes	Yes
Seat:	Removable	Removable
Storage Box:	Fabricated steel, located behind backrest	Fabricated steel, located behind backrest
Fuel Tank:		
Capacity	4.0 Gal. (15.0 ℓ)	5.0 Gal. (19.0 ℓ)
Oil Tank:		
Capacity	2.1 Qt. (2.0 ℓ)	2.1 Qt. (2.0 ℓ)
Front Bumper:	Chromed tubular steel	Chromed tubular steel
Rear Bumper:	Chromed tubular steel	Chromed tubular steel

MODEL	SL338B	SW396
Electrical:		
Headlight	12V - 35/35W Hi-Lo beam	12V - 35/35W Hi-Lo beam
Taillight	12V - 5W (rectangular)	12V - 5W (rectangular)
Stoplight	12V - 10W (incorporated in taillight)	12V - 10W (incorporated in taillight)
Ignition key switch	4 position on dash	4 position on dash
Brake:		
Type	Disc brake	Disc brake
Control	Handle lever, left-hand operated	Handle lever, left-hand operated
Throttle:		
Type	Handle lever, right-hand operated	Handle lever, right-hand operated
Accessories:		
Emergency starter rope	Yes	Yes
Tool kit	Yes	Yes
Seat spring upper	No	Yes
Spark plug	Yes (B7Hz)	Yes (B7Hz)

'71 Models

MODEL	SW433E	GP396
Dimensions and Weight:		
Length (W/Skis)	99-1/2 in. (2,526 mm)	99 in. (2,515 mm)
Width	36-1/2 in. (925 mm)	32 in. (815 mm)
Height (W/Windshield)	40-3/4 in. (1,035 mm)	38 in. (965 mm)
Weight (approx.)	379 lbs. (172 kg)	353 lbs. (160 kg)
Engine:		
Type	Air cooled two-stroke, 5-port induction, Cast iron sleeves, Aluminum cylinders	Air cooled two-stroke, 5-port induction, Aluminum cylinders
No. of cylinders	2 cylinders, parallel	2 cylinders, parallel
Bore and stroke	2.68 x 2.35 in. (68 x 59.6 mm) each	2.56 x 2.35 in. (65 x 59.6 mm) each
Displacement	26.4 cu.in. (433 c.c.)	24.2 cu.in. (396 c.c.)
Max. horse power	30 BHP @5,500 r.p.m.	28 BHP @5,500 r.p.m.
Carburetor	One (diaphragm-type), MIKUNI	Two (diaphragm-type), KEIHIN
Lubrication system	"Autolube" oil injection	"Autolube" oil injection
Ignition method	Flywheel magneto	Flywheel magneto
Magneto output	12V - 40W @3,000 r.p.m.	12V - 40W @3,000 r.p.m.
Spark plug	B-7Hz (N.G.K)	B-7Hz (N.G.K)
Starting System:	Electric starter Manual recoil starter with add'l emergency rope starter	Manual recoil starter with add'l emergency rope starter
Track and Suspension:		
Track	Molded rubber, steel reinforced	Molded rubber, steel reinforced
Width	18 in. (457 mm)	15 in. (380 mm)
Length on ground	50 in. (1,270 mm)	50 in. (1,270 mm)
Suspension wheels	12 rubber wheels bearing mounted	12 rubber wheels bearing mounted
Drive sprocket	Single, polyurethane, 9 teeth	Single, polyurethane, 9 teeth
Wheel sprocket	Single, polyurethane, 9 teeth	Single, polyurethane, 9 teeth
Transmission:		
Type	Automatic centrifugal engagement, infinitely variable 3.5 : 1 – 1 : 1	Automatic centrifugal engagement, infinitely variable 3.5 : 1 – 1 : 1
Drive	Duplex roller chain enclosed in oil bath	Duplex roller chain enclosed in oil bath
Reduction ratio	25/13 (1.923 : 1)	25/13 (1.923 : 1)
Frame:		
Type	Fabricated steel	Fabricated steel
Cowl:		
Type	Reinforced fiberglass (removable)	Reinforced fiberglass (removable)
Seat:	Removable	Removable
Luggage Box:	Fabricated steel, located behind backrest	Front part of the seat
Fuel Tank:		
Capacity	2.1 Qt. (2.0 ℓ)	4.0 Gal. (15.0 ℓ)
Oil Tank:		
Capacity:	–	2.1 Qt. (2.0 ℓ)
Front Bumper:	Chromed tubular steel	Chromed tubular steel
Rear Bumper:	Chromed tubular steel	Chromed tubular steel
Electrical:		
Headlight	12V - 35/35W Hi-Lo beam	12V - 35/35W Hi-Lo beam
Taillight	12V - 5W (rectangular)	12V - 5W (rectangular)
Stoplight	12V - 10W (incorporated in taillight)	12V - 10W (incorporated in taillight)
Ignition key switch	4 position on dash	4 position on dash

MODEL	SW433E	GP396
Electric starter:		
Maximum output	0.51 kW	
Maximum torque	0.54 kg-m at 6.2V	
Brake:		
Type	Disc brake	Disc brake
Control	Handle lever; left-hand operated	Handle lever, left-hand operated
Throttle:		
Type	Handle lever, left-hand operated	Handle lever, right-hand operated
Accessory:		
Emergency starter rope	Yes	Yes
Tool kit	Yes	Yes
Spark plug	B-7Hz (2)	Yes (B-7Hz) (2)
Seat spring upper	Yes (2)	

'71 Models

MODEL	SS433	SR433
Dimensions and Weight:		
Length (W/Skis)	99 in. (2,515 mm)	99 in. (2,515 mm)
Width	32 in. (815 mm)	32 in. (815 mm)
Height (W/Windshield)	38 in. (965 mm)	38 in. (965 mm)
Weight (approx.)	353 lbs. (160 kg)	275 lbs. (125 kg)
Engine:		Natural
Type	Air cooled two-stroke, 5-port induction, Aluminum cylinders	Air cooled two-stroke, 5-port induction Chrome plated, Aluminum cylinders
No. of cylinders	2 cylinders, parallel	2 cylinders, parallel
Bore and stroke	2.68 in. x 2.35 in. (68 x 59.6 mm) each	2.68 x 2.35 in. (68 x 59.6 mm)
Displacement	26.4 cu.in. (433 c.c.)	26.4 cu.in. (433 c.c.)
Max. horse power	40 BHP @6,500 r.p.m.	45 BHP @6,500 r.p.m.
Carburetor	Two (diaphragm-type), KEIHIN	Twin (diaphragm-type), MIKUNI
Lubrication system	"Autolube" oil injection	"Autolube" oil injection
Ignition method	Flywheel magneto	Flywheel magneto
Magneto output	12V - 40W @3,000 r.p.m.	12V - 40W @3,000 r.p.m.
Ignition timing	R . . . . 1.7 mm ± 0.1 mm B.T.D.C. L . . . . 1.9 mm ± 0.1 mm B.T.D.C.	R . . . . 1.7 mm ± 0.1 mm B.T.D.C. L . . . . 1.9 mm ± 0.1 mm B.T.D.C.
Spark plug	N-2G (Champion)	N-2G (Champion)
Starting System:	Manual recoil starter with add'l emergency rope starter	Manual recoil starter with add'l emergency rope starter
Track and Suspension:		
Track	Molded rubber, steel reinforced	Molded rubber, steel reinforced
Width	15 in. (380 mm)	15 in. (380 mm)
Length on ground	50 in. (1,270 mm)	50 in. (1,270 mm)
Suspension wheels	12 rubber wheels bearing mounted	12 rubber wheels bearing mounted
Drive sprocket	Single, polyurethane, 9 teeth	Single, polyurethane, 9 teeth
Wheel sprocket	Single, polyurethane, 9 teeth	Single, polyurethane, 9 teeth
Transmission:		
Type	Automatic centrifugal engagement, infinitely variable 3.5 : 1 – 1 : 1	Automatic centrifugal engagement, infinitely variable 3.5 : 1 – 1 : 1
Drive	Duplex roller chain enclosed in oil bath	Duplex roller chain enclosed in oil bath
Reduction ratio	25/13 (1.923 : 1)	31/18 (1.722 : 1)
Frame:		
Type	Fabricated steel	Fabricated aluminum
Cowl:		
Type	Reinforced fiberglass (removable)	Reinforced fiberglass (removable)
Seat:	Removable	Removable
Luggage Box:	Front part of the seat	–
Fuel Tank:		
Capacity	4.0 Gal. (15.0 ℓ)	4.0 Gal. (15.0 ℓ)
Oil Tank:		
Capacity	2.1 Qt. (2.0 ℓ)	2.1 Qt. (2.0 ℓ)
Front Bumper:	Chromed tubular steel	Chromed tubular steel
Rear Bumper:	Chromed tubular steel	Chromed tubular steel
Electrical:		
Headlight	12V - 35/35W Hi-Lo beam	12V - 35/35W Hi-Lo beam
Taillight	12V - 5W (rectangular)	12V - 5W (rectangular)
Ignition key switch	4 position on dash	4 position on dash

MODEL	SS433	SR433
Brake:		
Type	Disc brake	Disc brake
Control	Handle lever, left-hand operated	Handle lever, left-hand operated
Throttle:		
Type	Handle lever, right-hand operated	Handle lever, right-hand operated
Accessory:		
Emergency starter rope	Yes	Yes
Tool kit	Yes	Yes
Spark plug	No.	N2G (2)

'72 Models

MODEL	SL338C	SL433
Dimensions and Weight:		
Length (W/Skis)	103-3/8 in. (2,625 mm)	103-3/8 in. (2,625 mm)
Width	33-1/2 in. (850 mm)	33-1/2 in. (850 mm)
Height (W/Windshield)	38 in. (965 mm)	38 in. (965 mm)
Weight (approx.)	348 lbs. (158 kg)	359 lbs. (163 kg)
Engine:		
Type	Forced air cooled two-stroke, 5-port induction, Aluminum cylinders	Forced air cooled two-stroke, 5-port induction, Aluminum cylinders
No. of cylinders	2 cylinders, parallel	2 cylinders, parallel
Bore and stroke	2.36 x 2.35 in. (60 x 59.6 mm) each	2.68 x 2.35 in. (68 x 59.6 mm) each
Displacement	20.6 cu.in. (338 c.c.)	26.4 cu.in. (433 c.c.)
Max. horse power	24 BHP @5,500 r.p.m.	30 BHP @5,500 r.p.m.
Carburetor	One (diaphragm-type)	One (diaphragm-type)
Lubrication system	"Autolube" oil injection	"Autolube" oil injection
Ignition method	Flywheel magneto	Flywheel magneto
Magneto output	12V - 40W @3,000 r.p.m.	12V - 40W @3,000 r.p.m.
Spark plug	B-7HS (N.G.K.)	B-7HS (N.G.K.)
Starting System:	Manual with recoil starter	Manual with recoil starter
Track and Suspension:		
Track	Molded rubber, steel reinforced	Molded rubber, steel reinforced
Width	15 in. (380 mm)	15 in. (380 mm)
Length on ground	50 in. (1,270 mm)	50 in. (1,270 mm)
Suspension wheels	12 rubber wheels bearing mounted	12 rubber wheels bearing mounted
Drive sprocket	Single polyurethane, 9 teeth	Single polyurethane, 9 teeth
Wheel sprocket	Single polyurethane, 9 teeth	Single polyurethane, 9 teeth
Transmission:		
Type	Automatic centrifugal engagement, infinitely variable 3.5 : 1 – 1 : 1	Automatic centrifugal engagement, infinitely variable 3.5 : 1 – 1 : 1
Drive	Duplex roller chain enclosed in oil bath	Duplex roller cahin enclosed in oil bath
Reduction ratio	25/13 (1.923 : 1)	25/14 (1.786 : 1)
Frame:		
Type	Fabricated steel	Fabricated steel
Cowl:		
Type:	Reinforced fiberglass (removable)	Reinforced fiberglass (removable)
Engine Cowl:	Yes	Yes
Seat:	Removable	Removable
Storage Box:	Fiberglass reinforced in the engine room	Fiberglass reinforced in the engine room
Fuel Tank:		
Capacity	4.0 Gal. (15.0 ℓ)	4.0 Gal. (15.0 ℓ)
Oil Tank:		
Capacity	2.1 Qt. (2.0 ℓ)	2.1 Qt. (2.0 ℓ)
Front Bumper:	Chromed tubular steel	Chromed tubular steel
Rear Bumper:	Chromed tubular steel	Chromed tubular steel
Electrical:		
Headlight	12V - 35/35W Hi-Lo beam	12V - 35/35W Hi-Lo beam
Taillight	12V - 5W (rectangular)	12V - 5W (rectangular)
Stop light	12V - 10W (incorporated in taillight)	12V - 10W (incorporated in taillight)
Ignition key switch	4 position on dash	4 position on dash

MODEL	SL338C	SL433
Brake:		
Type	Disc brake	Disc brake
Control	Handle lever, left-hand operated	Handle lever, left-hand operated
Throttle:		
Type	Handle lever, right-hand operated	Handle lever, right-hand operated
Accessories:		
Emergency starter rope	Yes	Yes
Service tool	Yes	Yes
Optional Accessories:	Electric starter Speedometer Tachometer High windshield	Electric starter Speedometer Tachometer High windshield

'72 Models

MODEL	SW433B	EW433B
Dimensions and Weight:		
Length (W/Skis)	103-3/8 in. (2,625 mm)	103-3/8 in. (2,625 mm)
Width	37-5/8 in. (955 mm)	37-5/8 in. (955 mm)
Height (W/Windshield)	40-3/4 in. (1,035 mm)	40-3/4 in. (1,035 mm)
Weight (approx.)	384 lbs. (174 kg)	384 lbs. (174 kg)
Engine:		
Type	Forced air cooled two-stroke, 5-port induction, Aluminum cylinders	Forced air cooled two-stroke, 5-port induction, Aluminum cylinders
No. of cylinders	2 cylinders, parallel	2 cylinders, parallel
Bore and stroke	2.68 x 2.35 in. (68 x 59.6 mm) each	2.68 x 2.35 in. (68 x 59.6 mm) each
Displacement	26.4 cu.in. (433 c.c.)	26.4 cu.in. (433 c.c.)
Max. horse power	30 BHP @5,500 r.p.m.	30 HP @5,500 r.p.m.
Carburetor	One (diaphragm-type)	One (diaphragm-type)
Lubrication system	"Autolube" oil injection	"Autolube" oil injection
Ignition method	Flywheel magneto	Flywheel magneto
Magneto output	12V - 75W @3,000 r.p.m.	12V - 75W @3,000 r.p.m.
Spark plug	B7HS (N.G.K) B-7HS (N.G.K)	B-7HS (N.G.K)
Ignition timing	0.071 in. (1.8 mm) B.T.D.C.	0.071 in. (1.8 mm) B.T.D.C.
Starting System:	Manual with recoil starter	Electric starter with manual recoil starter
Track and Suspension:		
Track	Molded rubber, steel reinforced	Molded rubber, steel reinforced
Width	18 in. (457 mm)	18 in. (457 mm)
Length on ground	50 in. (1,270 mm)	50 in. (1,270 mm)
Suspension wheels	12 rubber wheels bearing mounted	12 rubber wheels bearing mounted
Drive sprocket	Single polyurethane, 9 teeth	Single polyurethane, 9 teeth
Wheel sprocket	Single polyurethane, 9 teeth	Single polyurethane, 9 teeth
Transmission:		
Type	Automatic centrifugal engagement, infinitely variable 3.5 : 1 – 1 : 1	Automatic centrifugal engagement, infinitely variable 3.5 : 1 – 1 : 1
Drive	Duplex roller chain enclosed in oil bath	Duplex roller chain enclosed in oil bath
Reduction ratio	Hi 25/14 (1.786 : 1) Lo 25/14 x 1.6 (2.875 : 1)	Hi 25/14 (1.786 : 1) Lo 25/14 x 1.6 (2.875 : 1)
Frame:		
Type	Fabricated steel	Fabricated steel
Cowl:		
Type	Reinforced fiberglass (removable)	Reinforced fiberglass (removable)
Engine Cowl:	Yes	Yes
Seat:	Removable	Removable
Storage Box:	Fiberglass reinforced in the engine room	Fiberglass reinforced in the engine room
Fuel Tank:		
Capacity	5.0 Gal. (19.0 ℓ)	5.0 Gal. (19.0 ℓ)
Oil Tank:		
Capacity	2.1 Qt. (2.0 ℓ)	2.1 Qt. (2.0 ℓ)
Front Bumper:	Chromed tubular steel	Chromed tubular steel
Rear Bumper:	Chromed tubular steel	Chromed tubular steel
Electrical:		
Headlight	12V - 60/60W Hi-Lo beam	12V - 60/60W Hi-Lo beam
Taillight	12V - 5W (rectangular)	12V - 5W (rectangular)
Stoplight	12V - 10W (incorporated in taillight)	12V - 10W (incorporated in taillight)
Ignition key switch	4 posiiton on dash	4 position on dash

MODEL	SW433B	EW433B
Brake:		
Type	Disc brake	Disc brake
Control	Handle lever, left-hand operated	Handle lever, left-hand operated
Throttle:		
Type	Handle lever, right-hand operated	Handle lever, right-hand operated
Electric Starter:		
Maximum output	–	0.51 kW
Maximum torque	–	0.54 kg-m (3.90 ft-lbs) at 6.2V
Speedometer:		
Light bulb	–	12V - 2W
Tachometer:		
Light bulb	–	12V - 2W
Accessories:		
Emergency starter rope	Yes	Yes
Service tool	Yes	Yes
Optional Accessories:	High windshield	High windshield

'72 Models

MODEL	GP433	GP643
Dimensions and Weight:		
Length (W/Skis)	103-3/8 in. (2,625 mm)	103-3/8 in. (2,625 mm)
Width	33-1/2 in. (850 mm)	37-5/8 in. (955 mm)
Height (W/Windshield)	38 in. (965 mm)	40-3/4 in. (1,035 mm)
Weight (approx.)	357 lbs. (162 kg)	416 lbs. (189 kg)
Engine:		
Type	Air cooled two-stroke, 5-port induction Cast iron sleeves, Aluminum cylinders	Air cooled two-stroke, 5-port induction Cast iron sleeves, Aluminum cylinders
No. of cylinder	2 cylinders, parallel	Twin cylinders
Bore and stroke	2.68 x 2.35 in. (68 x 59.6 mm) each	3.01 x 2.76 in. (76.5 x 70 mm)
Displacement	26.4 cu.in. (433 c.c.)	39.2 cu.in. (643 c.c.)
Max. horse power	38 H.P. @6,000 r.p.m.	43 H.P. @5,500 r.p.m.
Carburetor	Two (diaphragm-type)	Two (diaphragm-type)
Lubrication system	"Autolube" oil injection	"Autolube" oil injection
Ignition method	Flywheel magneto	Flywheel magneto
Magneto output	12V - 40W @3,000 r.p.m.	12V - 40W @3,000 r.p.m.
Spark plug	N-2G (Champion)	B-7ES (N.G.K.)
Starting system:	Manual recoil starter with add'l emergency rope starter	Manual recoil starter with add'l emergency rope starter
Track and Suspension:		
Track	Molded rubber, steel reinforced	Molded rubber, steel reinforced
Width	15 in. (380 mm)	18 in. (457 mm)
Length on ground	50 in. (1,270 mm)	50 in. (1,270 mm)
Suspension wheels	12 rubber wheels bearing mounted	12 rubber wheels bearing mounted
Drive sprocket	Single, polyurethane, 9 teeth	Single, polyurethane, 9 teeth
Wheel sprocket	Single, polyurethane, 9 teeth	Single, polyurethane, 9 teeth
Transmission:		
Type	Automatic centrifugal engagement, infinitely variable 3.5 : 1 – 1 : 1	Automatic centrifugal engagement, infinitely variable 3.5 : 1 – 1 : 1
Drive	Duplex roller chain enclosed in oil bath	Duplex roller chain enclosed in oil bath
Reduction ratio	23/13 (1.770 : 1)	21/14 (1.500 : 1)
Frame:		
Type	Fabricated steel	Fabricated steel
Cowl:		
Type	Reinforced fiberglass (removable)	Reinforced fiberglass (removable)
Seat:	Removable (Racing seat)	Removable (Racing seat)
Fuel Tank:		
Capacity	4.0 Gal. (15.0 ℓ)	5.0 Gal. (19.0 ℓ)
Oil Tank:		
Capacity	2.1 Qt. (2.0 ℓ)	2.1 Qt. (2.0 ℓ)
Front Bumper:	Chromed tubular steel	Chromed tubular steel
Electrical:		
Headlight	12V - 35/35W Hi-Lo beam	12V - 35/35W Hi-Lo beam
Taillight	12V - 5W (rectangular)	12V - 5W (rectangular)
Stoplight	12V - 10W with twin reflector	12V - 10W with twin reflector
Ignition key switch	4 position on dash	4 position on dash
Brake:		
Type	Disc brake	Floating pad disc brake
Control	Handle lever, right-hand operated	Handle lever, left-hand operated

MODEL	GP433	GP643
Throttle: Type	Handle lever, left-hand operated	Handle lever, right-hand operated
Tachometer:	Right-hand side of the instrument panel	Right-hand side of the instrument panel
Speedometer:	Left-hand side of the instrument panel	Left-hand side of the instrument panel
Accessories: Emergency starter rope Service tool	 Yes Yes	 Yes Yes
Optional equipment parts	Expansion muffler (SS kit) SR kit	

'72 Models

MODEL	EW643
Dimensions and Weight:	
Length (W/Skis)	103-3/8 in. (2,625 mm)
Width	37-5/8 in. (925 mm)
Height (W/Windshield)	40-3/4 in. (1,035 mm)
Weight (approx.)	485 lbs. (220 kg)
Engine:	
Type	Forced air cooled two-stroke, 5-port induction, Aluminum cylinders
Number of cylinders	2 cylinders, parallel
Bore and stroke	3.01 x 2.76 in. (76.5 x 70 mm) each
Displacement	39.2 cu.in. (643 c.c.)
Max. horse power	41 H.P. @5,500 r.p.m.
Carburetor	One (diaphragm-type), KEIHIN
Lubrication system	"Autolube" oil injection
Ignition method	Flywheel magneto
Magneto output	12V - 75W @3,000 r.p.m.
Spark plug	B-7ES (N.G.K.)
Starting System:	Electric starter with manual
Track and Suspension:	
Track	Molded rubber, steel reinforced
Width	18 in. (457 mm)
Length on ground	50 in. (1,270 mm)
Suspension wheels	12 rubber wheels bearing mounted
Drive sprocket	Single polyurethane, 9 teeth
Wheel sprocket	Single polyurethane, 9 teeth
Transmission:	
Type	Hydraulic transmission with quick change
Drive	Duplex roller chain enclosed in oil bath
Reduction	Hi 21/15 (1.400 : 1) Lo 21/15 x 1.6 (2.24 : 1)
Frame:	
Type	Fabricated steel
Cowl:	
Type	Reinforced fiberglass (removable)
Engine Cowl:	Yes
Seat:	Removable
Storage Box:	Fiberglass reinforced in the engine room
Fuel Tank:	
Capacity	5.0 Gal. (19.0 ℓ)
Oil Tank:	
Capacity	2.1 Qt. (2.0 ℓ)
Front Bumper:	Chromed tubular steel
Rear Bumper:	Chromed tubular steel
Electrical:	
Headlight	12V - 60/60W Hi-Lo beam
Taillight	12V - 5W (rectangular)
Stoplight	12V - 10W (incorporated in taillight)
Ignition key switch	4 position on dash

MODEL	EW643
Brake: Type Control	 Disc brake Handle lever, left-hand operated
Throttle: Type	 Handle lever, right-hand operated
Electric starter: Starting method	 Button type (Left-hand side of the instrument panel)
Speedometer: Light bulb	 12V - 3W
Tachometer: Light bulb	 12V - 3W
Accessories: Service tool	 Yes
Optional Accessories:	High windshield

'72 Models

MODEL	SR433B	SR643
Dimensions and Weight:		
Length (W/Skis)	99-3/4 in. (2,535 mm)	99-3/4 in. (2,535 mm)
Width	33-1/2 in. (850 mm)	37-5/8 in. (955 mm)
Height	33 in. (840 mm)	33-3/4 in. (860 mm)
Weight	309 lbs. (140 kg)	352 lbs. (160 kg)
Engine:		
Type	2-stroke 5-ports, Cast iron sleeves, Aluminum cylinders	2 stroke 5-ports, Cast iron sleeves, Aluminum cylinders
Cooling method	Free air cooled	Free air cooled
No. of cylinder	2 cylinders	2 cylinders
Bore and stroke	2.68 x 2.35 in. (68 x 59.6 mm)	3.01 x 2.76 in. (76.5 x 70 mm)
Displacement	26.4 cu.in. (433 c.c.)	39.2 cu.in. (643 c.c.)
Compression ratio	7.0 : 1	6.7 : 1
Carburetor	CD42-38 (twin), KEIHIN	CD50-43 (twin), KEIHIN
Lubrication system	Yamaha autolube oil injection system	Yamaha autolube oil injection system
Ignition method	Flywheel magneto	Flywheel magneto
Max. horse power	55 H.P. @7,500 r.p.m.	70 H.P. @7,000 r.p.m.
Ignition timing	L, R 0.07" (1.8 mm) B.T.D.C.	L, R 0.10" (2.6 mm) B.T.D.C.
Spark plug	Champion N-2G	Champion N-2G
Idling r.p.m.	3,000 r.p.m.	2,900 r.p.m.
Piston clearance	40 ~ 50μ (0.040 ~ 0.050 mm)	40 ~ 50μ (0.040 ~ 0.050 mm)
Starting System:	Manual with recoil starter	Manual with recoil starter
Drive:		
Transmission	V-belt automatic centrifugal engagement, infinitely variable 3.5 : 1 – 1 : 1	V-belt automatic centrifugal engagement, infinitely variable 3.5 : 1 – 1 : 1
Drive chain	Triple roller chain	Triple roller chain
Reduction ratio	30/18 = 1.667	27/18 = 1.500
Drive sprocket	Single polyurethane 9 teeth 15 in. (380 mm) in width	Single polyurethane 9 teeth 18 in. (457 mm) in width
	Special reinforced rubber track deep pattern	Special reinforced rubber track deep pattern
Suspension	Bogie type torsion spring 12 rubber wheel	Bogie type torsion spring 12 rubber wheel
Body:		
Frame	Aluminum	Aluminum
Cowl	Fiberglass reinforced plastic	Fiberglass reinforced plastic
Fuel tank capacity	3.2 gal. (12.0 ℓ)	4.0 gal. (15.0 ℓ)
Oil tank capacity	2.1 qt. (2.0 ℓ)	2.1 qt. (2.0 ℓ)
Front bumper	Yes (Aluminum)	Yes (Aluminum)
Rear bumper	Yes (Aluminum)	Yes (Aluminum)
Brake System:	Floating pad disc brake	Floating pad disc brake
Throttle Type:	Handle lever, right-hand operated	Handle lever, right-hand operated
Tachometer:	Yes (Right-hand side of the instrument panel)	Yes (Right-hand side of the instrument panel)
Speedometer:	Yes (Left-hand side of the instrument panel)	Yes (Left-hand side of the instrument panel)
S.T.D. attachment parts:	Service tool Spark plug (Champion N-2G) x 2	Service tool Spark plug (Champion N-2G) x 2

1–3 TOOLS

1. Special Tools

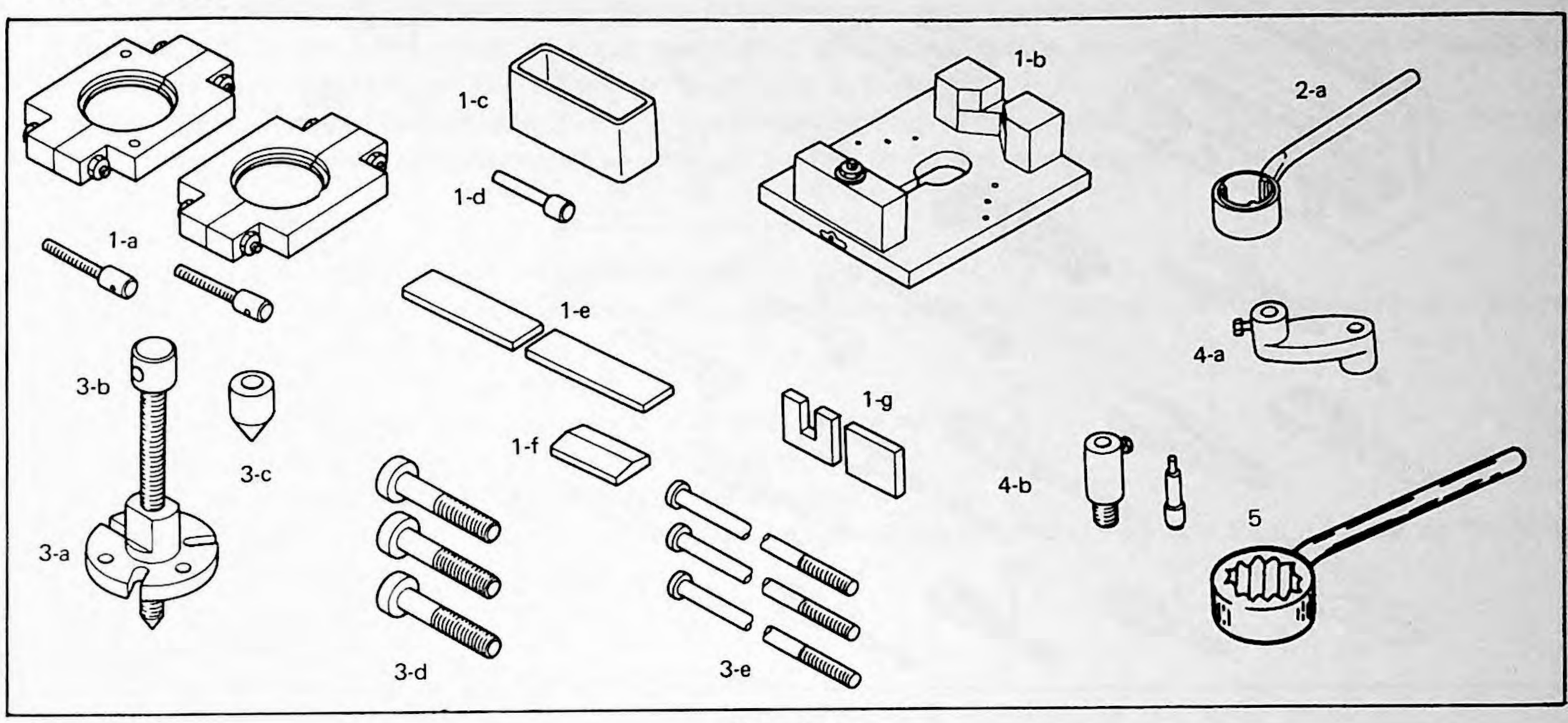

Fig. 1-1

1. Crankshaft assembly disassembling and reassembling jigs.
   - 1-a Crank separator 90890-02103
   - 1-b Crank jig 90890-02300
   - 1-c Press box 90890-02202
   - 1-d Press pin 90890-02203
   - 1-e Support plates 90890-02204
   - 1-f Wedge 90890-02205
   - 1-g Stops (56 mm) 90890-02215
2. Ring nut removal tool
   - 2-a Bearing nut wrench 90890-01812
3. Flywheel/Primary sheave puller
   - 3-a Magneto puller body 90890-01802
   - 3-b Magneto puller screw 90890-01803
   - 3-c Magneto puller attachment 90890-01804
   - 3-d Screw, 8 mm L : 80 90890-01806
   - 3-e Screw, 6 mm L : 160 90890-01816
4. Ignition timing setting tool
   - 4-a Dial gauge stand #1 90890-01037
   - 4-b Dial gauge stand #2 90890-01039
5. Socket end wrench 90890-01813

2. Gauge

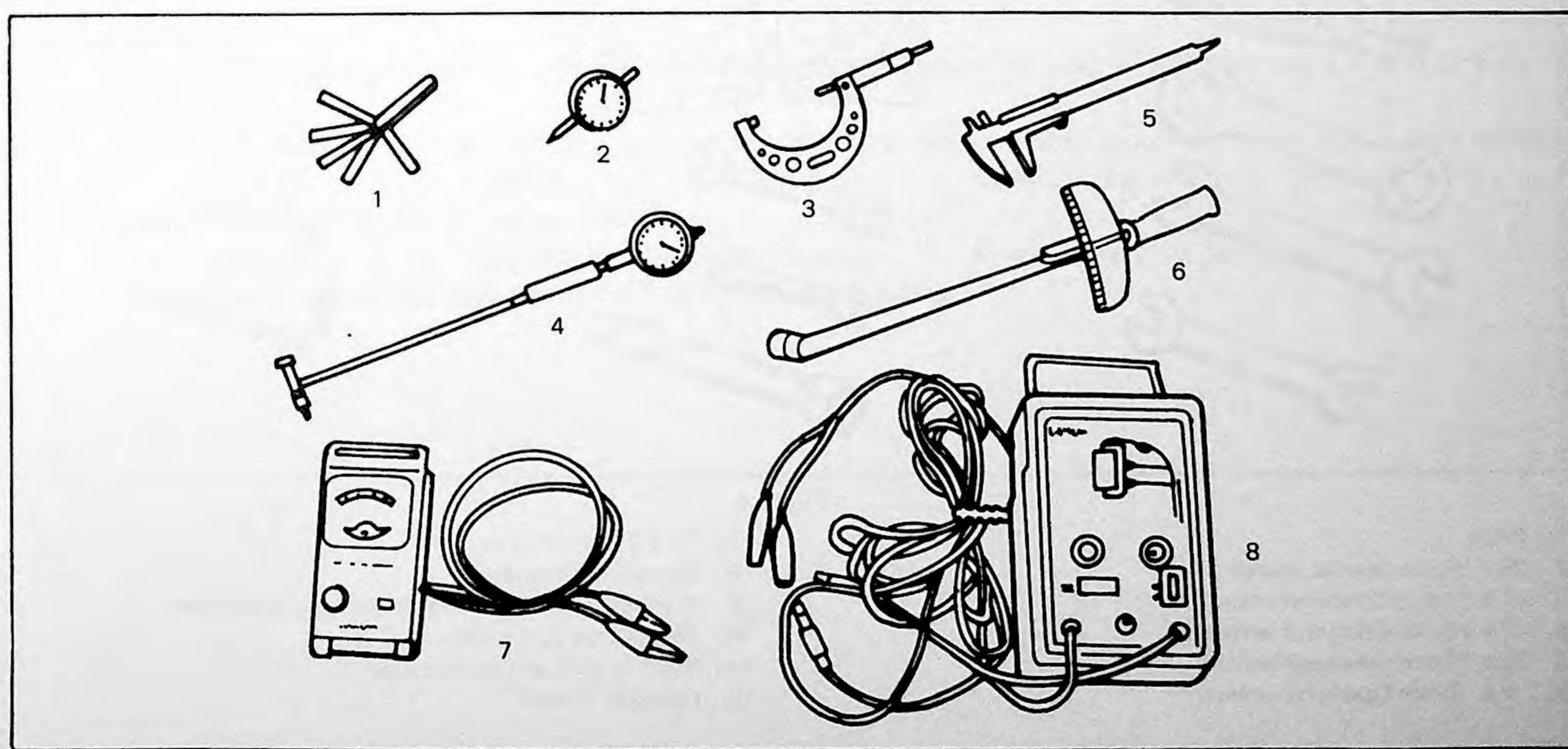

Fig. 1-2

1. Thickness gauge
2. Dial gauge
3. Micrometer
4. Cylinder gauge
5. Vernier caliper
6. Torque wrench
7. Point checker
8. Coil tester

3. General Tools

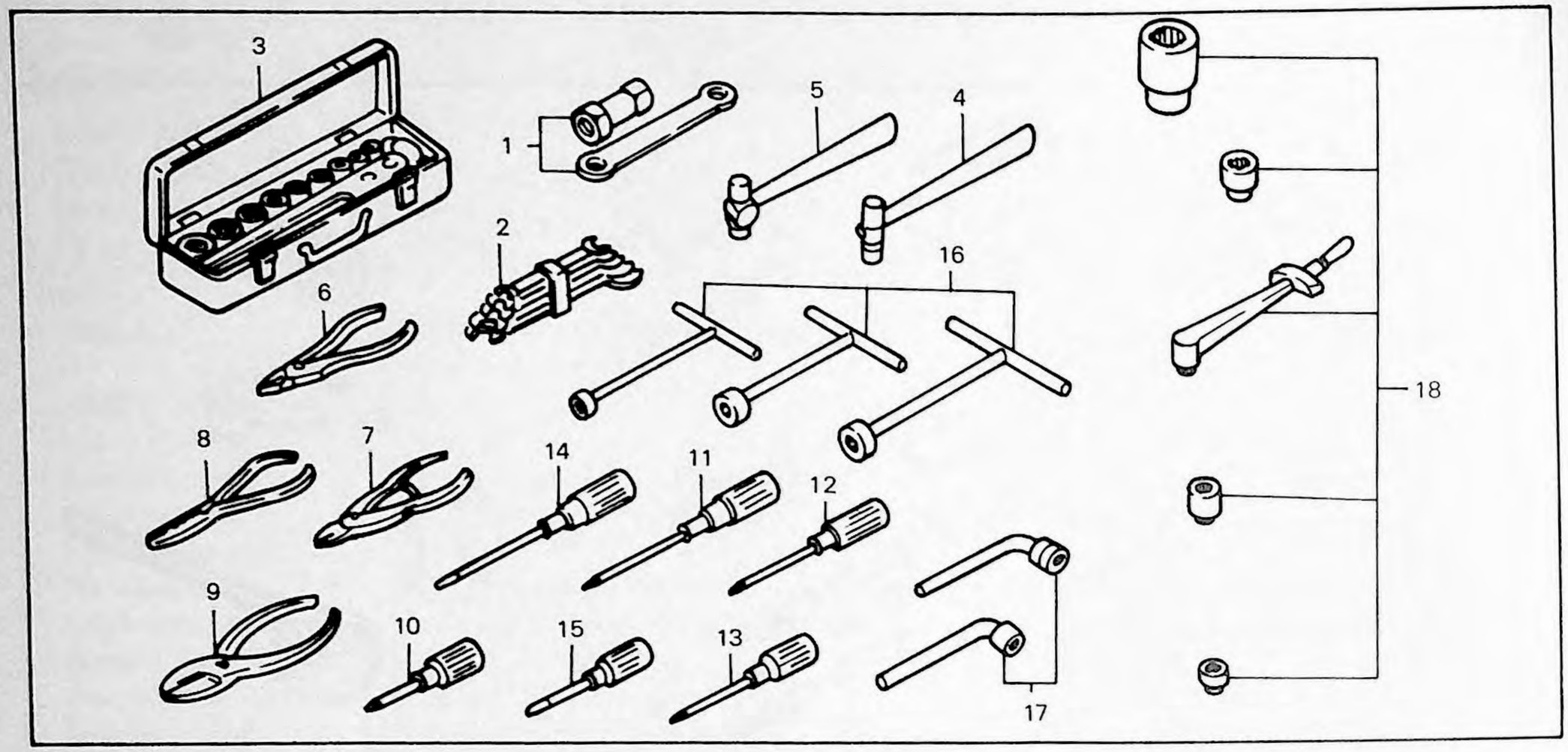

Fig. 1-3

1. Plug wrench
2. Set of open-end wrenches
3. Set of socket wrenches
4. Soft-faced hammer
5. Steel hammer
6. Circlip pliers (ST type)
7. Circlip pliers (RT type)
8. Needle nose pliers
9. Pliers
10. Philips-head screw driver
11. Philips-head screw driver (large)
12. Philips-head screw driver (medium)
13. Philips-head screw driver (small)
14. Slot-head screw driver (medium)
15. Slot-head screw driver (small)
16. T-type socket wrench
17. L-type socket wrench
18. Torque wrench and sockets

4. Standard Tool Kit

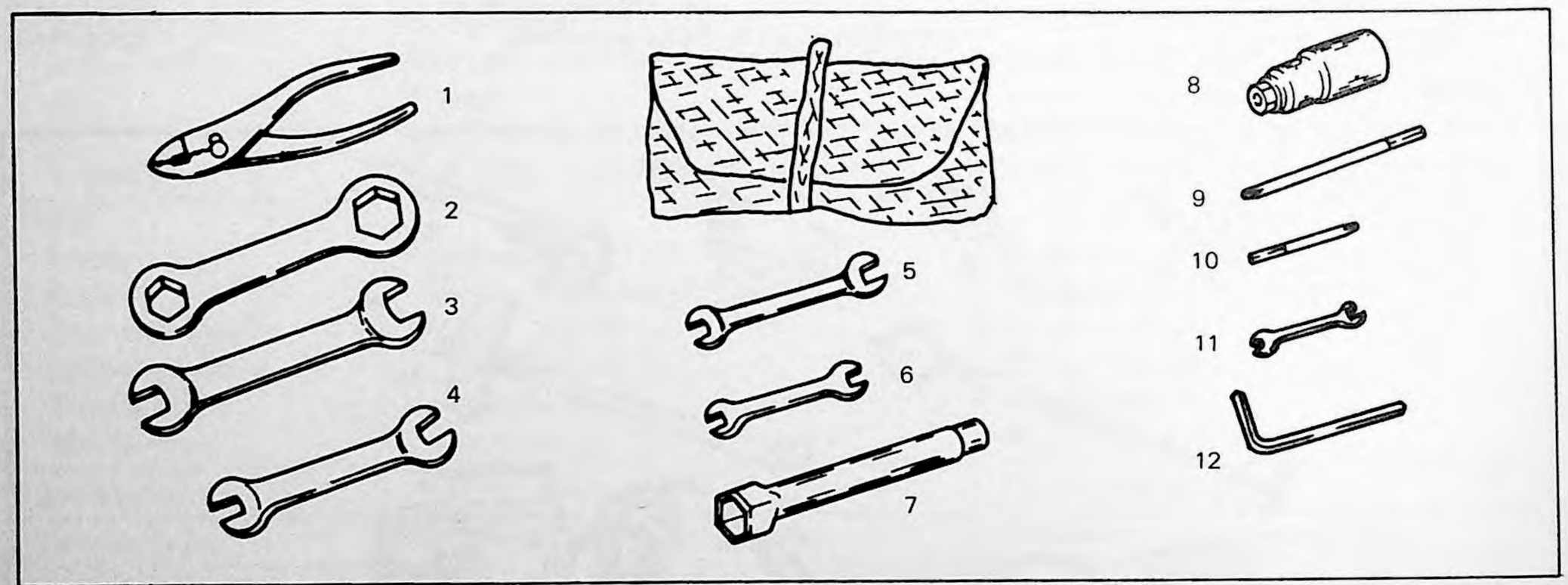

Fig. 1-4

1. Pliers
2. 29 x 22 mm Special wrench
3. 21 x 19 mm Open-end wrench
4. 17 x 13 mm Open-end wrench
5. 12 x 10 mm Open-end wrench
6. 8 x 7 mm Open-end wrench
7. 13 x 21 mm Plug wrench
8. Screwdriver handle
9. Combination slotted and philips type screwdriver
10. Philips type screwdriver
11. Point wrench and feeler gauge
12. Hexagon wrench

1–4 OPERATION

1. Warm-up and Break-in Procedures

Each time the engine is started it should be allowed to reach normal operating temperature before being used.

When the unit is new, full speed or laborious operation in wet snow should be avoided. After 10 hours of operation, break-in is usually complete, and the unit will run both better and cooler.

At the end of the 10 hour break-in period, it would be advisable to thoroughly check nuts, bolts, and screws for tightness. Loose hardware can cause excessive vibration and lead to damage of the engine or chassis.

2. Pre-Operational Checks

Before operating the snowmobile, make it a habit to check:

a. Fuel – When fueling, use straight gas. Check amount before starting out. The fuel tank holds approximately five or six gallons and is located in the shroud.
b. Oil – Check lever of oil in autolube tank.
c. Controls – Check to make sure the brake and throttle operate correctly.
d. Lighting – Make sure all lighting equipment is operable.
e. Drive-belt – Inspect the drive belt for damage and adjustment.
f. Track – Check the track for cracks. If necessary, adjust the tension of the track and align the track so that it is brought to a centered position.

3. Sequence of Operations

a. Turn switch on by inserting key and turning clockwise.
b. Depress carburetor choke lever – (Return to its original position when the engine will revolve smoothly.)
c. Pull the starter – Firmly grasp the starter handle and pull slowly until engagement of the mechanism can be felt. Then, pull briskly, but be careful not to pull the cable so far out that it "bottoms." This will result in longer cable life.

   Sometimes an engine will start better at a certain throttle opening. A little practice will insure immediate-starting.
d. Warm up the engine – Once the engine is running cleanly, movement of the throttle lever will increase engine r.p.m. and cause engagement of the drive system.
e. Regulate the speed of the snowmobile with various throttle positions. Since the throttle is spring loaded, the snowmobile will stop and the engine will return to an idle any time the hand is removed from the lever.
f. The disc brake can be used to stop the snowmobile. It brakes the entire drive mechanism. It is actuated by the lever mounted on the left side of the handle lever.

4. Service and Spare Parts

a. Always check your machine periodically to prevent damage to parts because of improper adjustments or wear of other parts.
b. Carry tools with you at all times so that minor maintenance can be done when required. These tools should include:
   1. Tool kit 2. Flashlight 3. Vinyl tape 4. Steel wire 5. Tow rope
c. Spare parts recommended as a safety measure.
   1. Drive belt 2. Light bulbs 3. Spark plugs 4. Emergency starter rope
d. Fuel – When making long trips, extra fuel and oil should be carried.

CHAPTER 2. ENGINE

2–1 ENGINE REMOVAL

Note:

For engine removal only, it is not necessary to remove the magneto assembly or primary sheave assembly. However, crankshaft maintenance does require their removal. Maintenance of the magneto assembly and primary sheaves can be done with the engine in the snowmobile frame.
To demount the engine, the following preliminarry operations must be performed.

18 in Track Model SW 433C EW433C	15 in Track Model EL433B SL433B SL338D	GP MODEL (15 in Track) GP433B GP338
1. Removing the double seat	Same procedure	Same as left
2. Removing the engine cowl lid	Different procedure	N/A
3. Removing the engine cowl	Different procedure	Remove carburetor and silencer
4. Removing the drive guard	Same procedure	Same as left
5. Disconnecting the fuel pipe and oil pipe	Same procedure	Same as left
6. Disconnecting the oil pump control rod	Same procedure	Same as left
7. Disconnecting the throttle wire and choke wire	Same procedure	Same as left
8. Removing the tachometer cable	EL433B only	Same as left
9. Disconnecting the flywheel magneto leads	Same procedure	Same as left
10. Removing the muffler ass'y	Same procedure	Same as left
11. Removing the drive belt (V-belt)	Same procedure	Same as left
12. Removing engine mounting bolts	Same procedure	Same as left

2–1–1 Removing the Double Seat

The double seat is bolted at its front and rear ends. The rear end is fastened with two 13 mm nuts, while the front end is secured with a 10 mm bolt, together with the engine cowl.

Note:

The 10 mm bolt means that its distance across flats of the hexagon head is 10 mm.

Note:

Before removing the double seat, disconnect the stop/tail lamp connector at the front of the double seat.

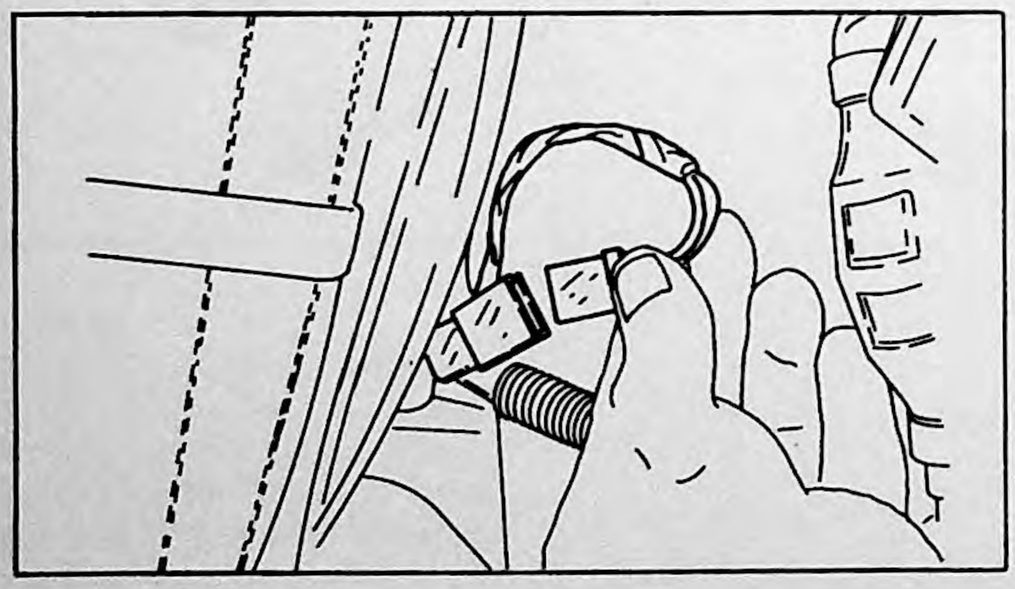

Fig. 2-1

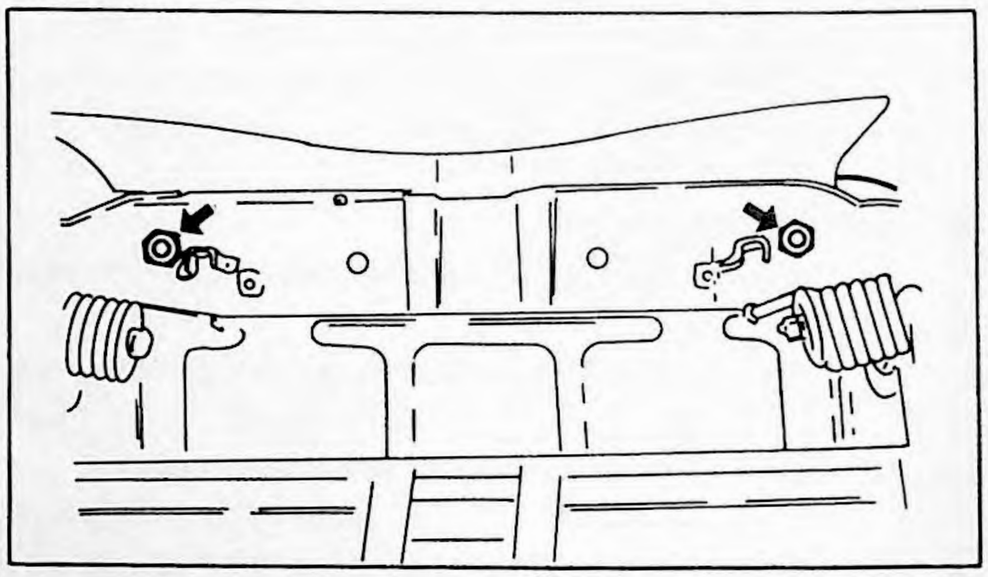

Fig. 2-2

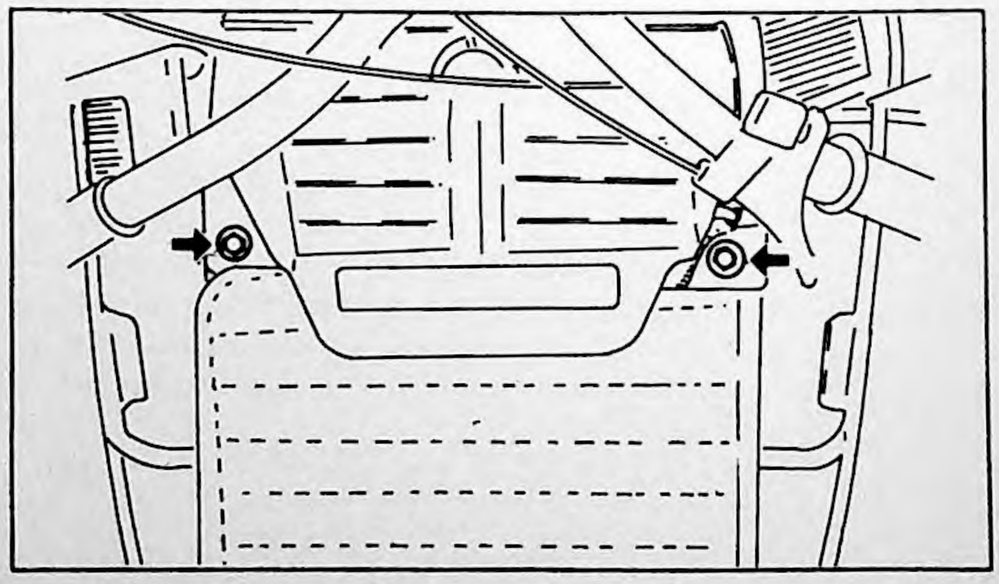

Fig. 2-3

2–1–2 Removing the Engine Cowl Lid

To open the engine cowl lid, turn the knob counterclockwise. (On a 15 in. track model, pull the knob downward.) The lid is secered to the engine cowl with two needles. Pull the lid to the left, and separate it from the engine.

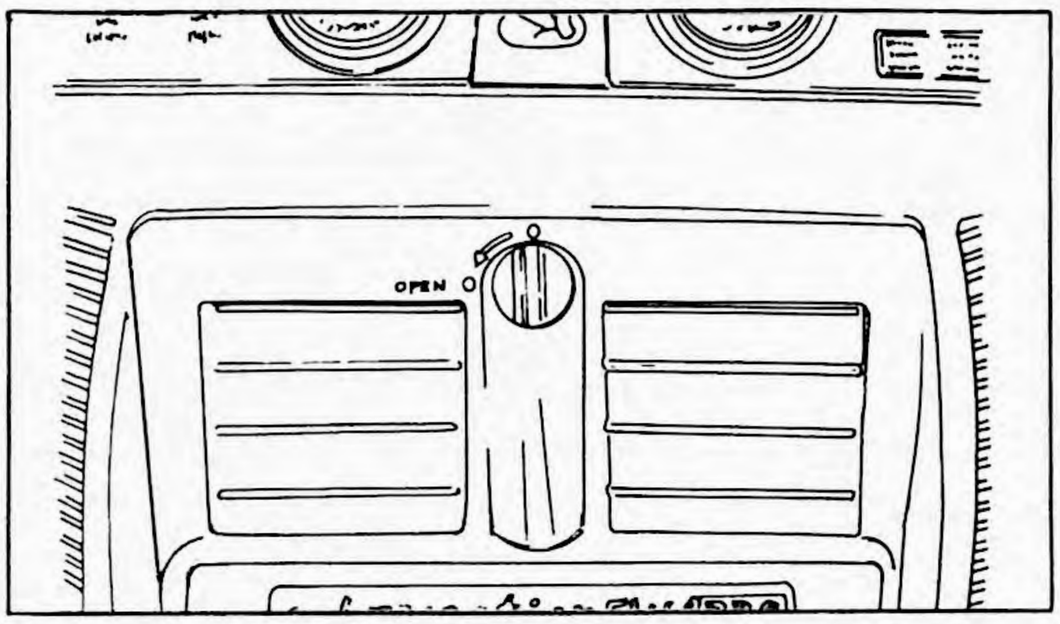

Fig. 2-4

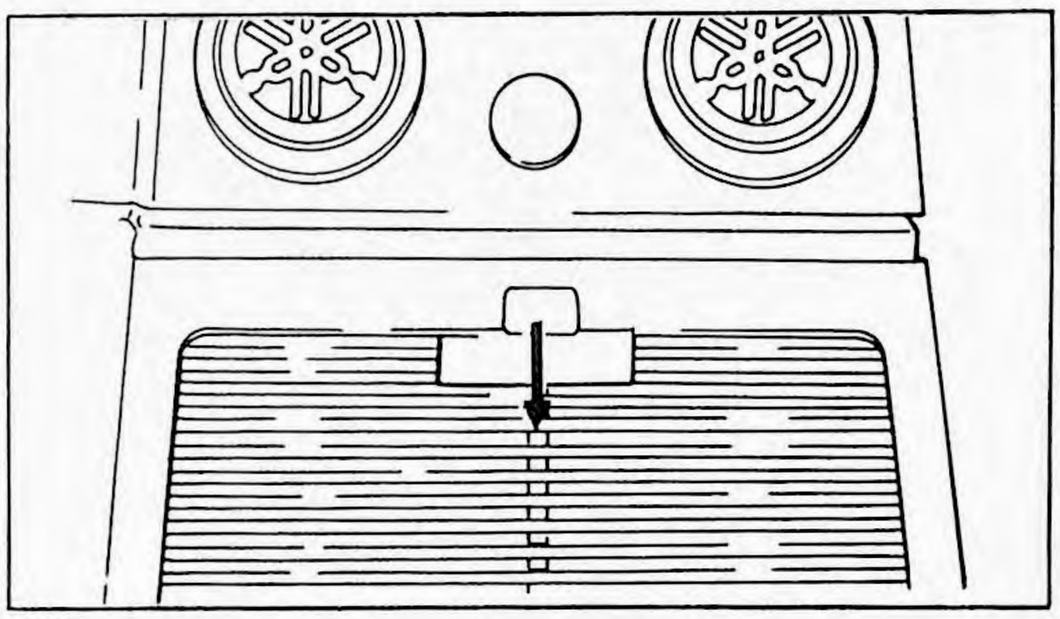

Fig. 2-5

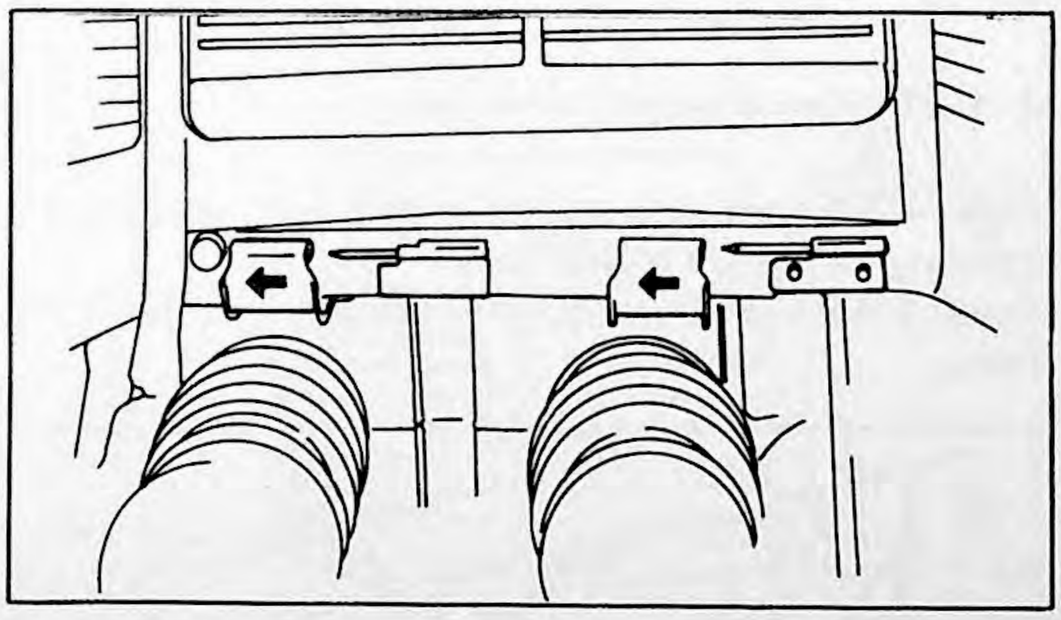

Fig. 2-6

2–1–3 Removing the Engine Cowl (SW433C, EW433C, EL433B, SL433B, and SL338D)

First remove the pipe gauge from the oil tank. Then, remove the two 10 mm bolts on the instrument panel. (On a 15 in. track model, remove the two panhead screws.)

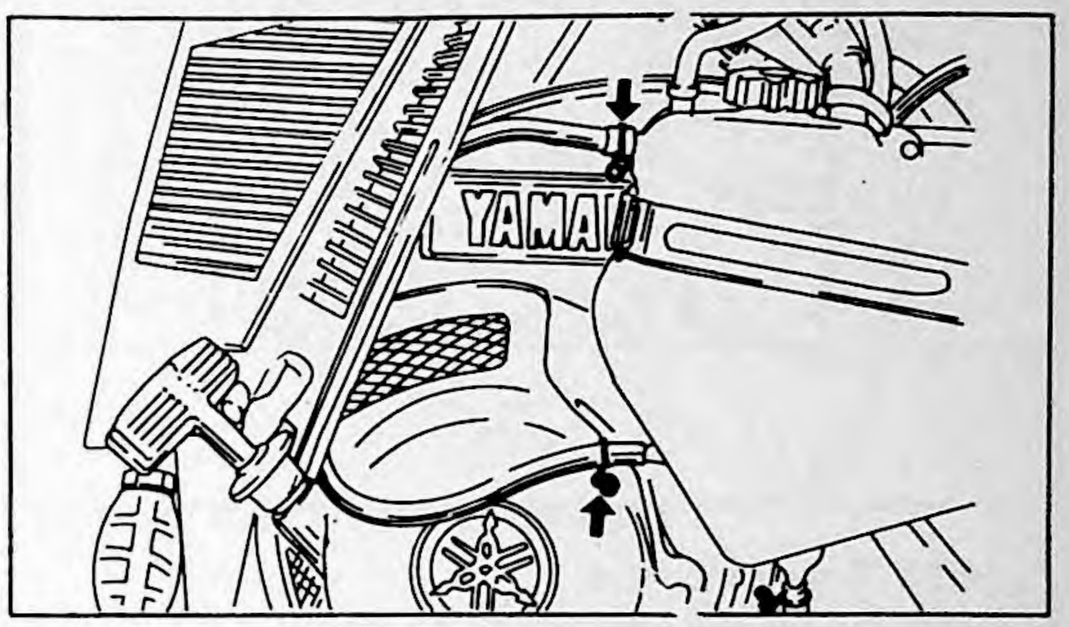

Fig. 2-7

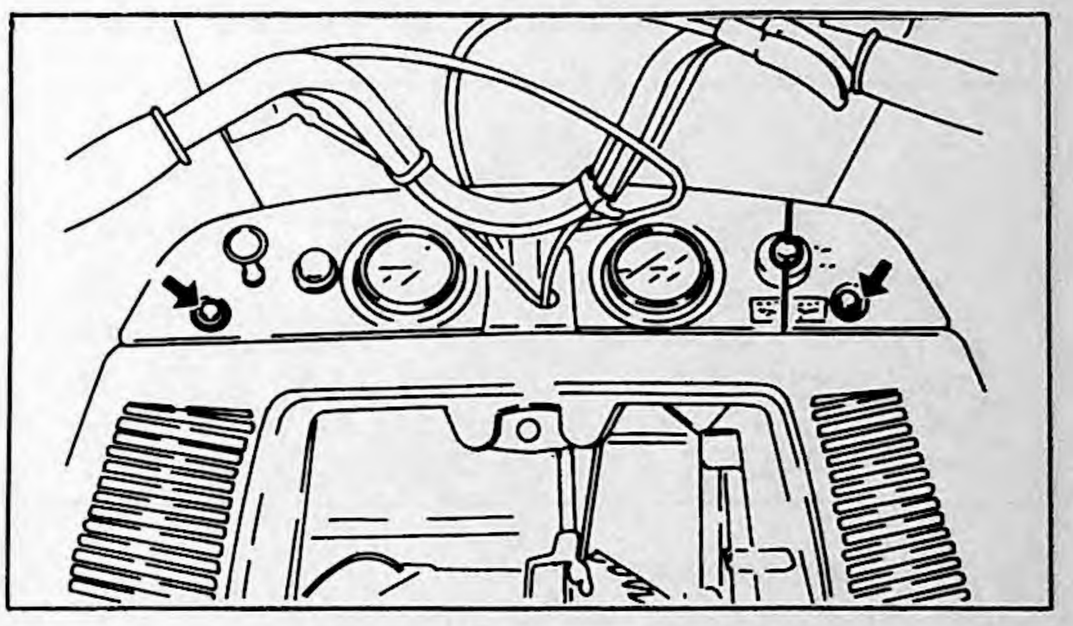

Fig. 2-8

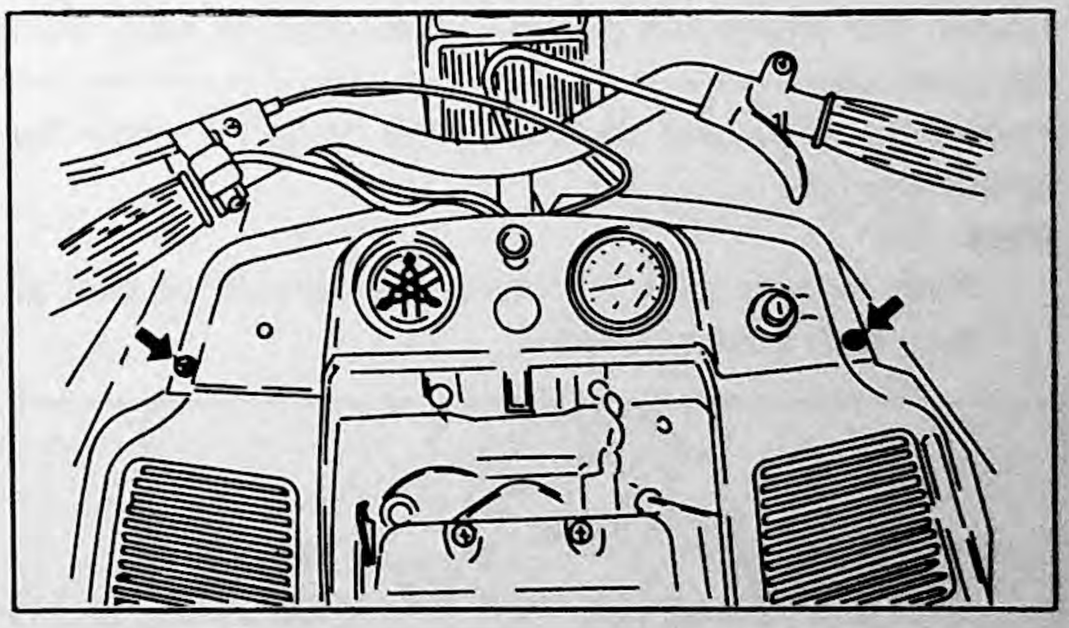

Fig. 2-9

2–1–6 Disconnecting the Oil Pump Control Rod

Loosen the 6 mm double nut, and disconnect the oil pump control rod from the carburetor throttle link.

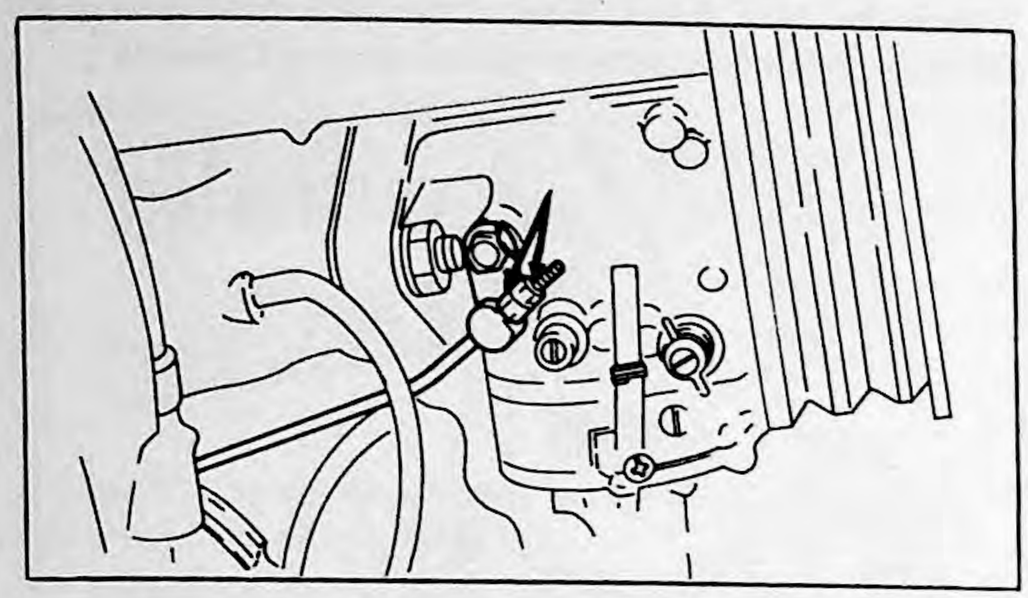

Fig. 2-10 Single carburetor

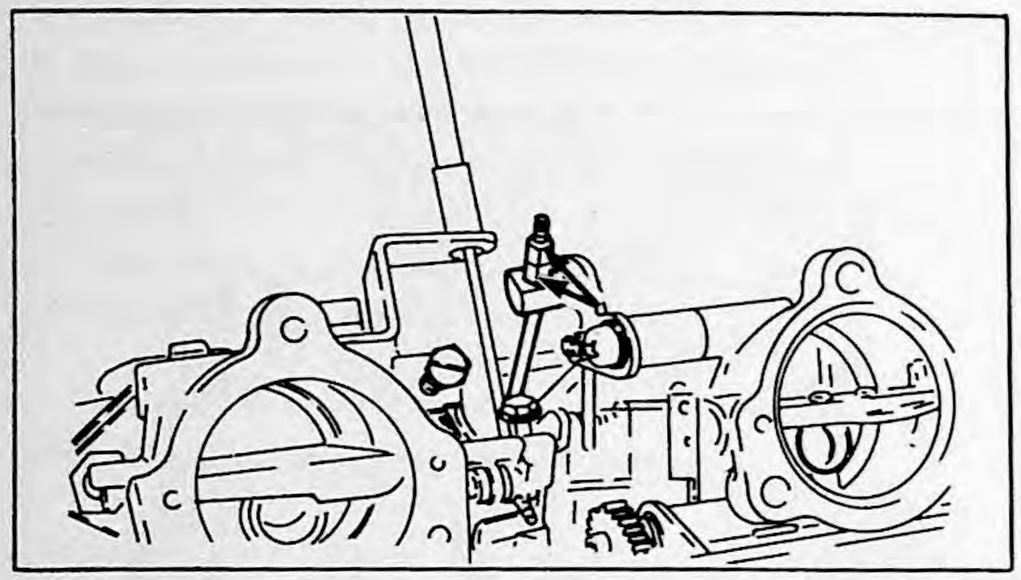

Fig. 2-11 Twin carburetor

2–1–7 Disconnecting the Throttle Wire and Choke Wire

Loosen the screw, and disconnect the throttle wire from the carburetor.
Loosen the screw, and disconnect the choke wire from the carburetor.

Note:

Both throttle wire and choke wire should be bent at their ends after installed.

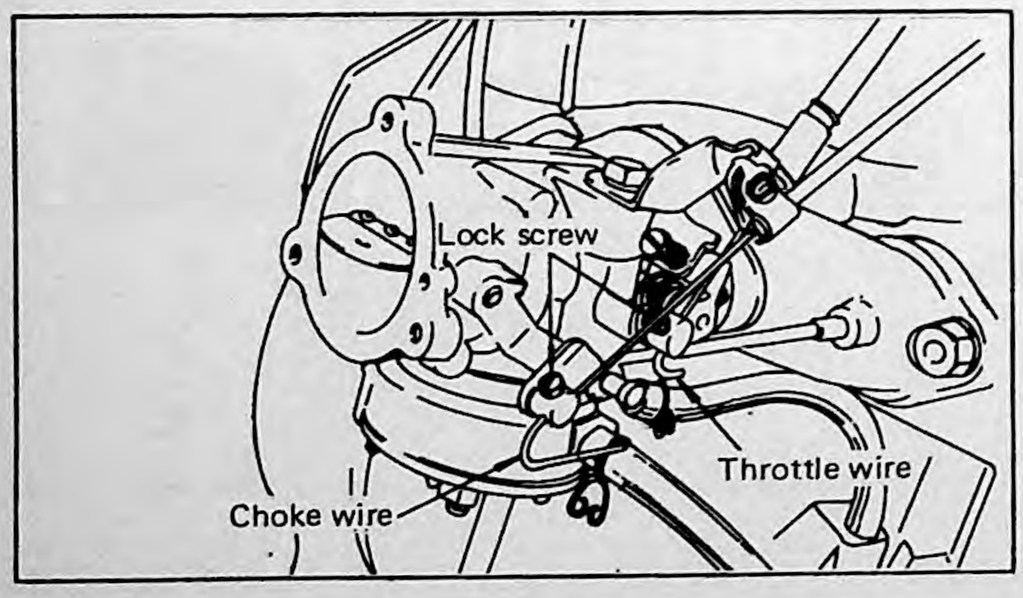

Fig. 2-12

2–1–8 Removing the Tachometer Cable

Remove the tachometer cable from the oil pump by turning the ring nut. (EL433B, EW433C, and GP model)

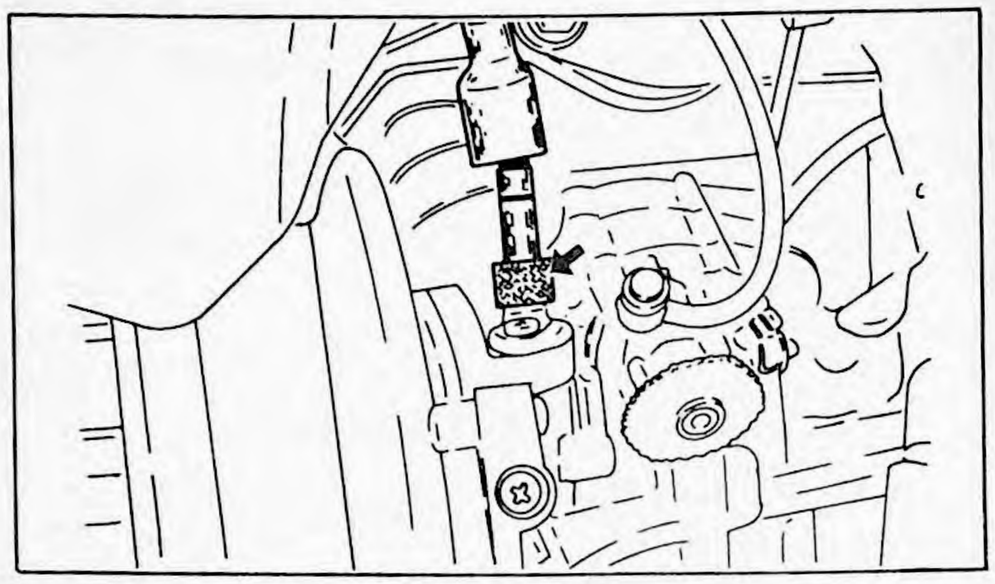

Fig. 2-13

2–1–9 Disconnecting the Flywheel Magneto Leads

Disconnect the leads coming from the flywheel at the connector.

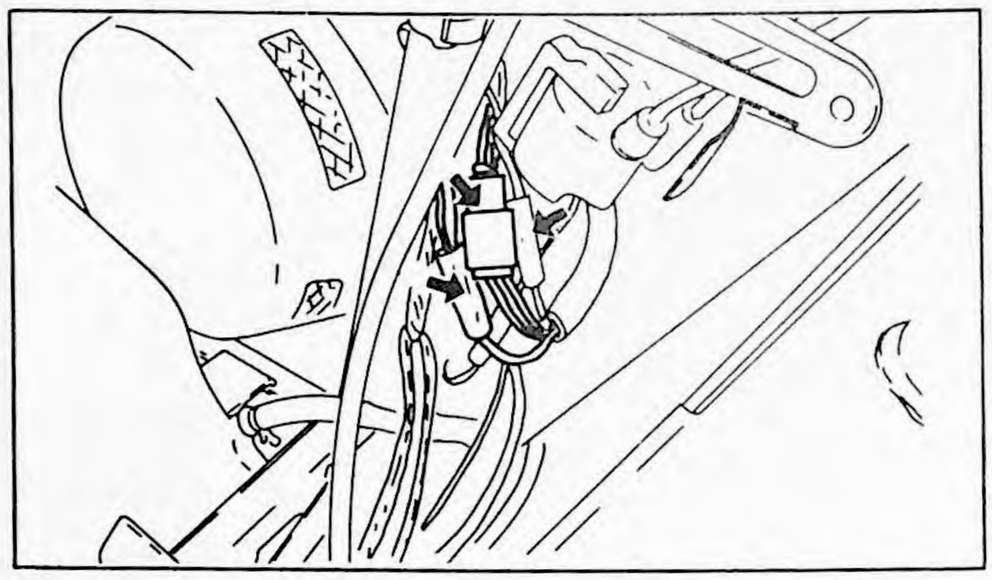

Fig. 14

2–1–10 Removing the Muffler Ass'y

Remove the two coil springs at the joint between the exhaust pipe and the muffler ass'y.
Remove the two 13 mm bolts securing the muffler to the frame.

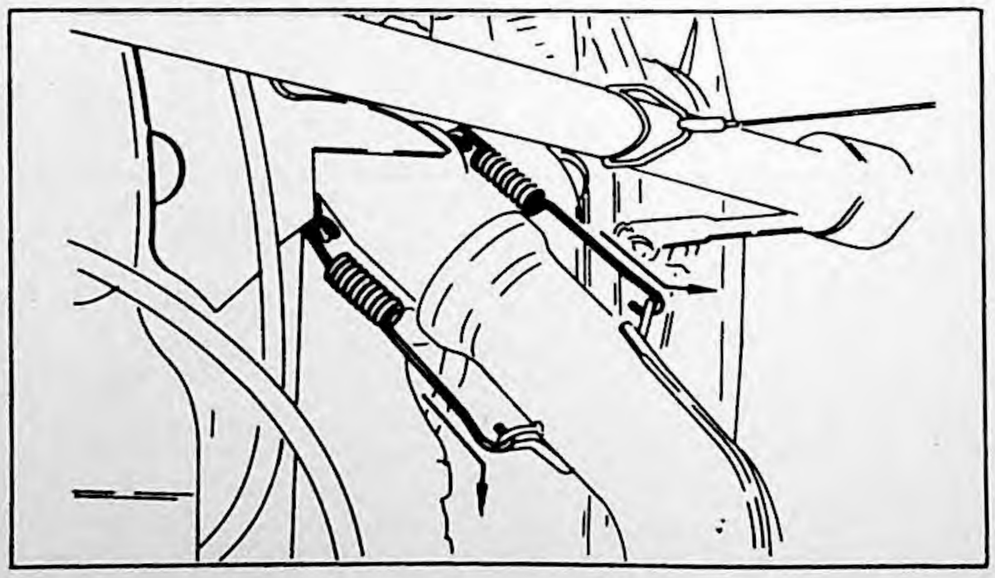

Fig. 2-15

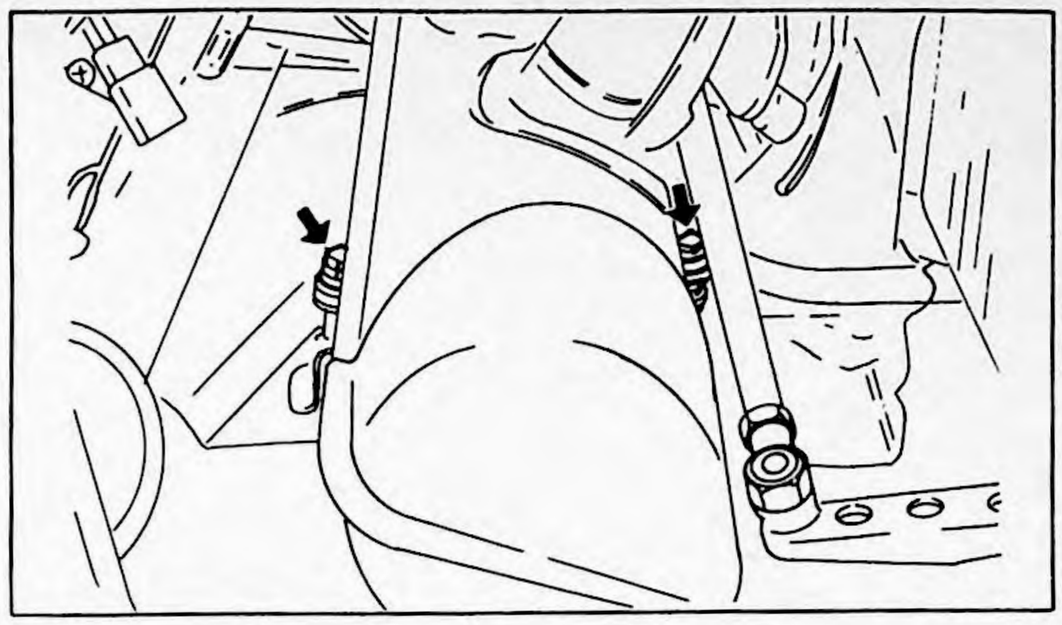

Fig. 2-16

Remove the four 13 mm bolts, and remove the exhaust pipe from the engine.

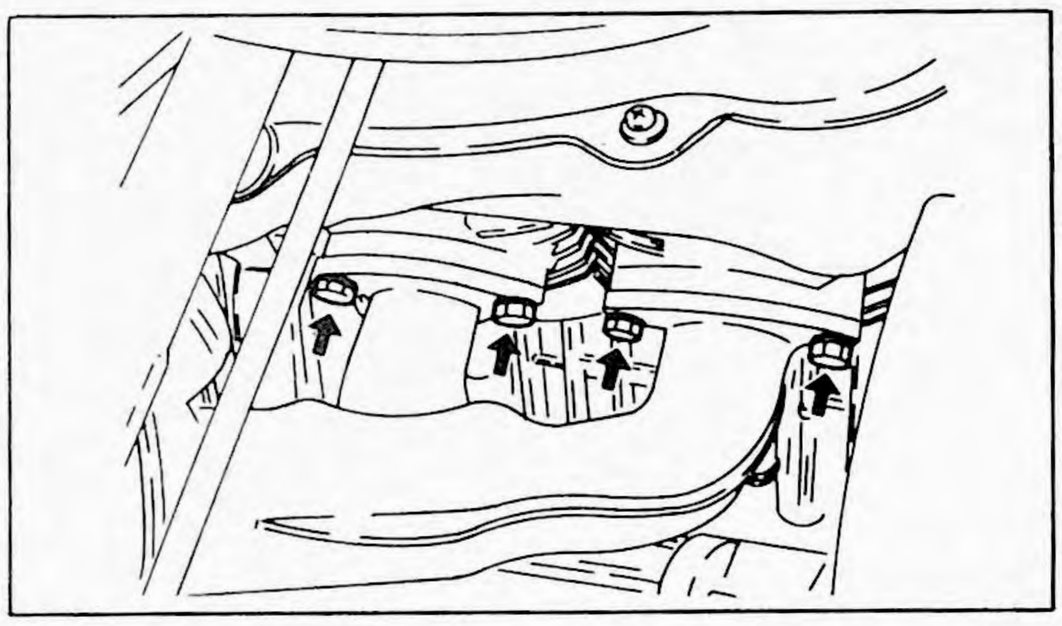

Fig. 2-17

2–1–11 Removing the Carburetor Silencer (GP433B and GP338)

Remove the screw, and remove the sliencer 2.

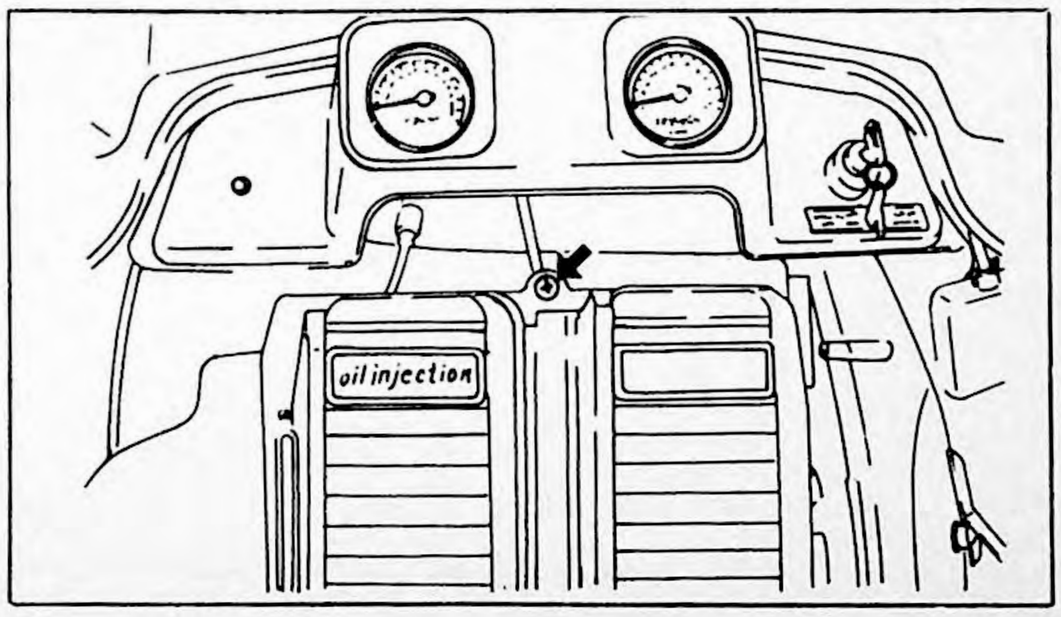

Fig. 2-18

Remove the six panhead screws, and remove the silencer 1.

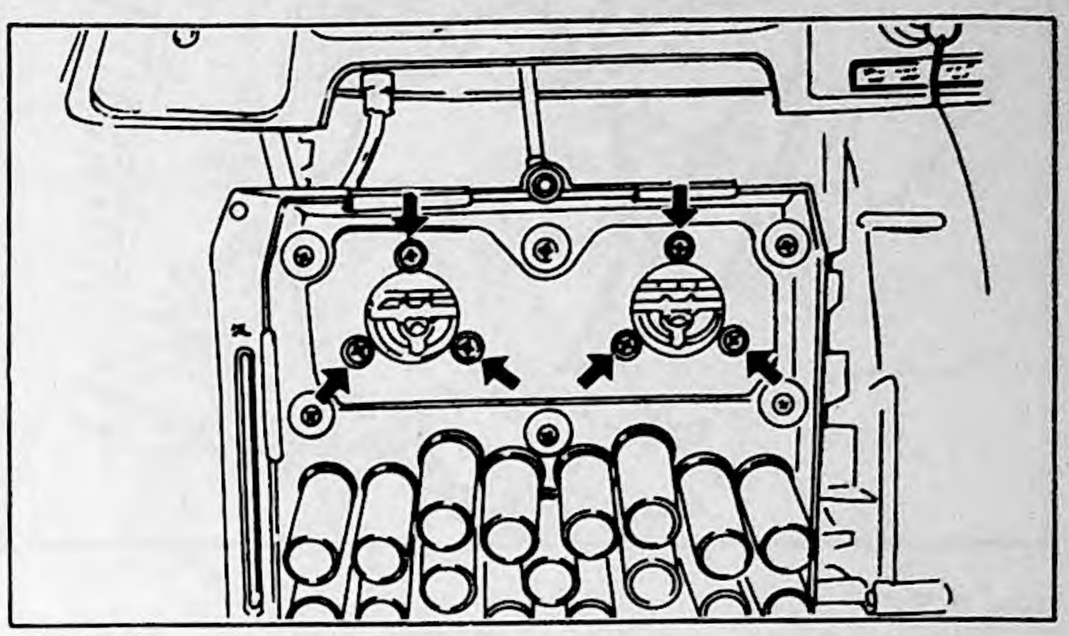

Fig. 2-19

2–1–12 Removing the Drive Guard

Loosen the knob on the drive guard end by turning to the left.

By turning the latch on the drive guard to the left, unlock the lock. Then, pull out the drive guard toward you.

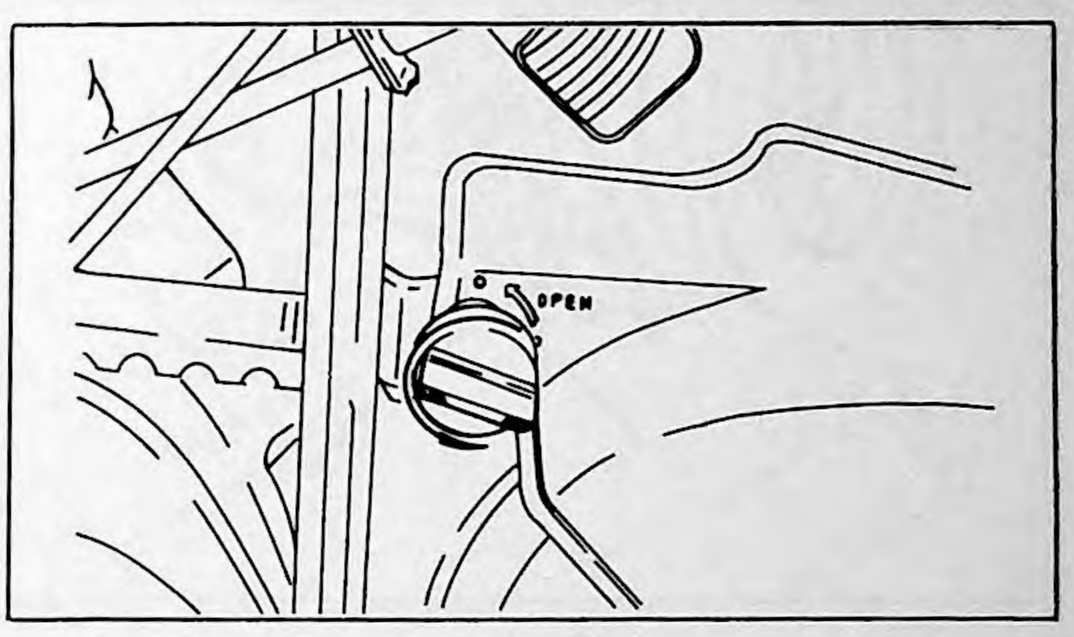

Fig. 2-20

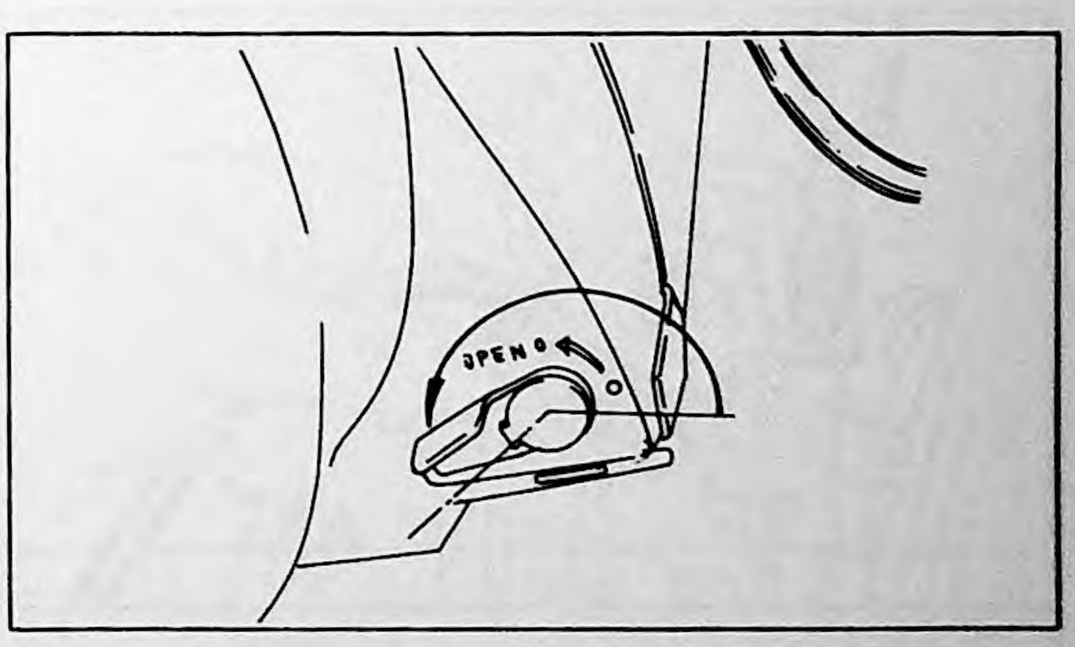

Fig. 2-21

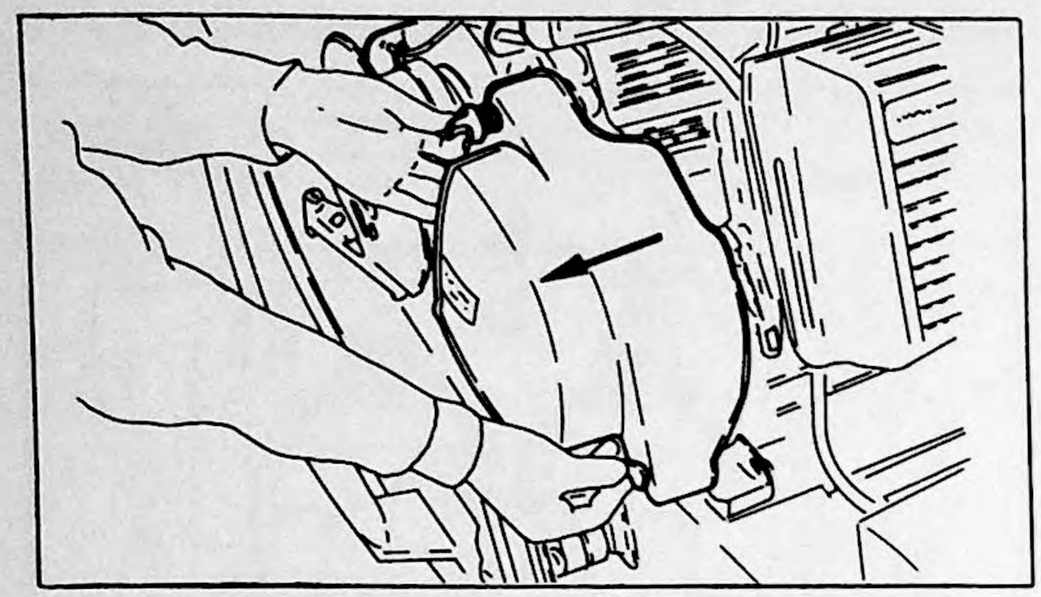

Fig. 2-22

2–1–13 Disconnecting the Fuel Pipe and Oil Pipe

Pull out the fuel pipe from the carburetor.
Pull out the oil pipe from the oil pump.

Note:

When installing, they should be tightly held at the joints with circlips.

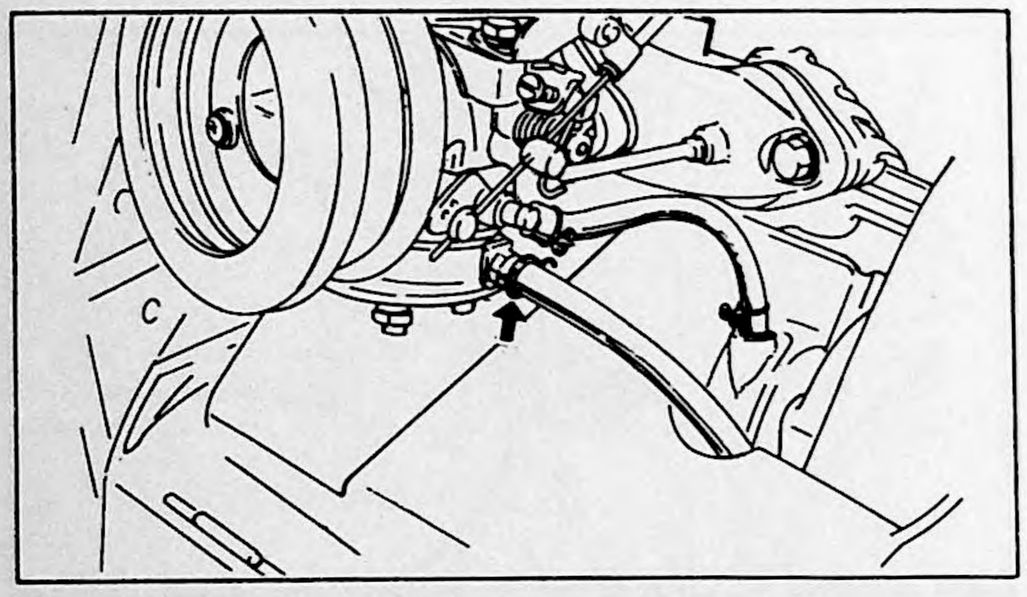

Fig. 2-23

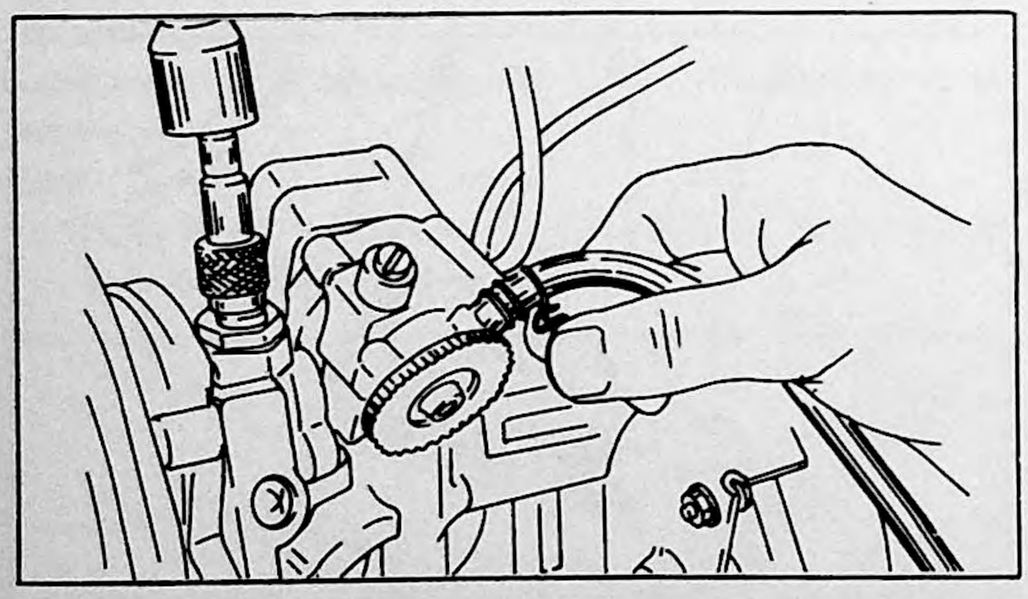

Fig. 2-24

INTAKE

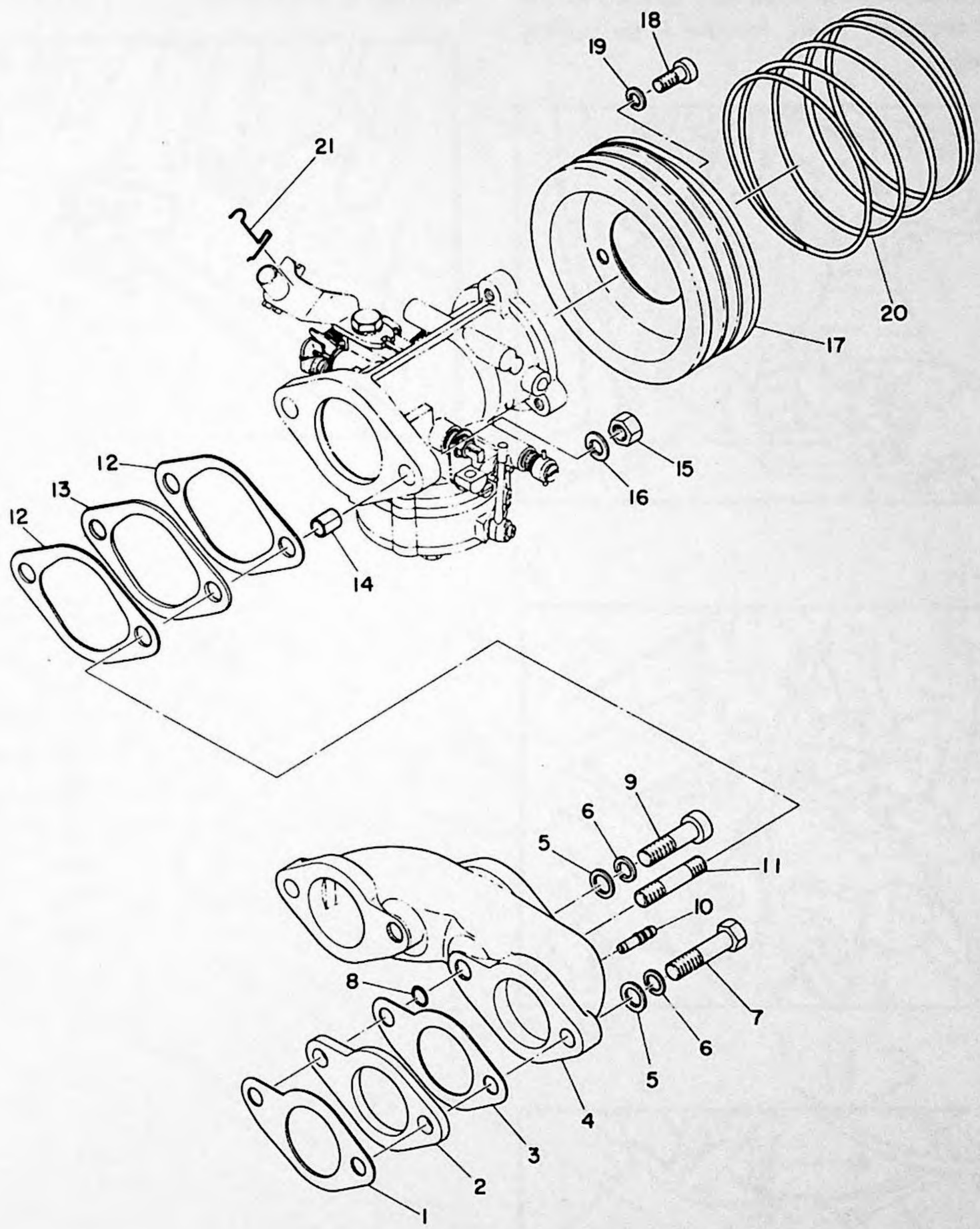

Fig. 2-25

Ref. No.	Description	Q'ty	Ref. No.	Description	Q'ty
1	GASKET 1	2	12	GASKET 3	2
2	JOINT	2	13	JOINT	1
3	GASKET 2	2	14	SPACER	2
4	JOINT, manifold	1	15	NUT	2
5	WASHER, plain	4	16	WASHER, spring	2
6	WASHER, spring	4	17	PLATE	1
7	BOLT	2	18	SCREW, panhead	3
8	O-RING (1.9-6.8)	2	19	WASHER, spring	3
9	BOLT	2	20	SPRING	1
10	NOZZLE	2	21	CLAMP, throttle	1
11	STUD	2			

2–1–14 Drive Belt (V-belt) Removal

Push the secondary sliding sheave to the other side while turning to the right, and pull the drive belt upward at the center of its upper section. Then, remove it by pulling toward the sliding sheave.

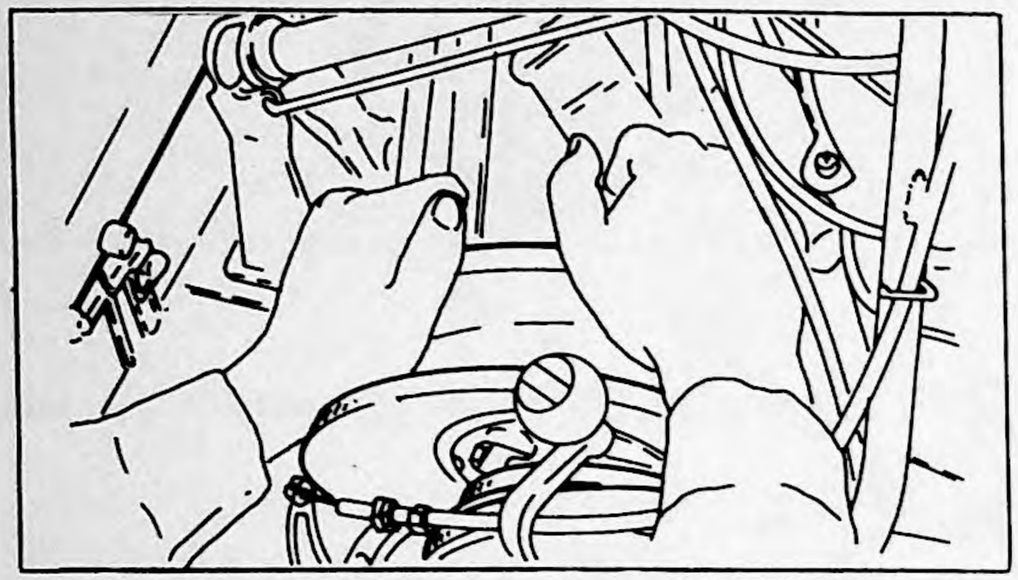

Fig. 2-26

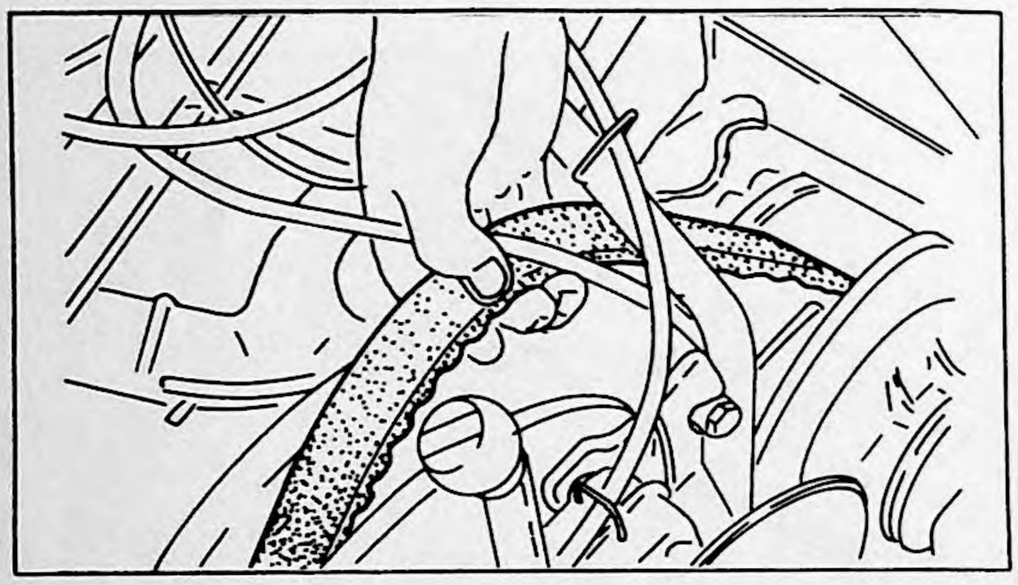

Fig. 2-27

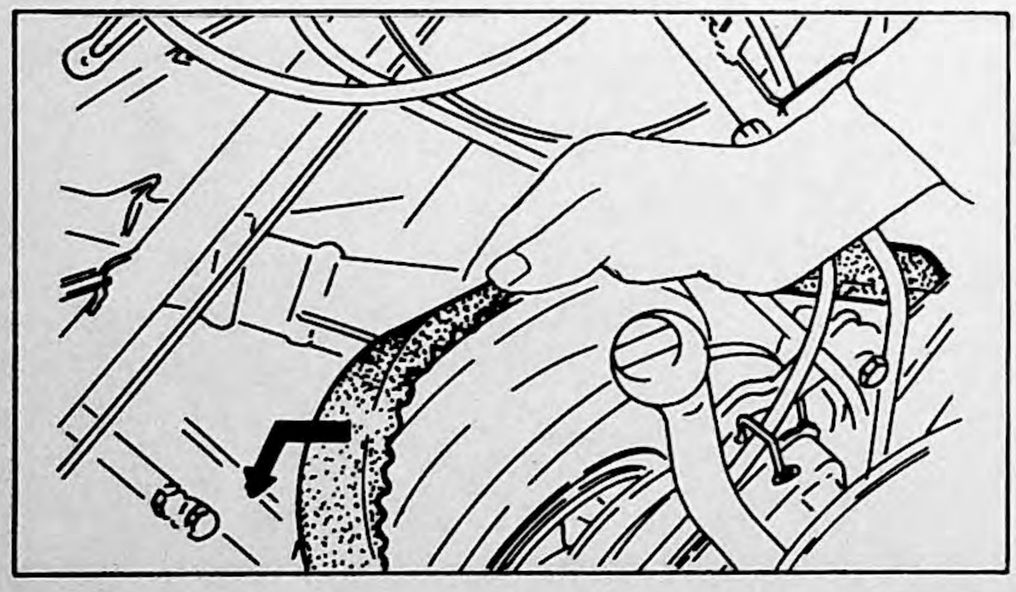

Fig. 2-28

2–1–15 Engine Mounting Bolt Removal

Loosen the four 17 mm bolts securing the engine lower bracket to the frame.

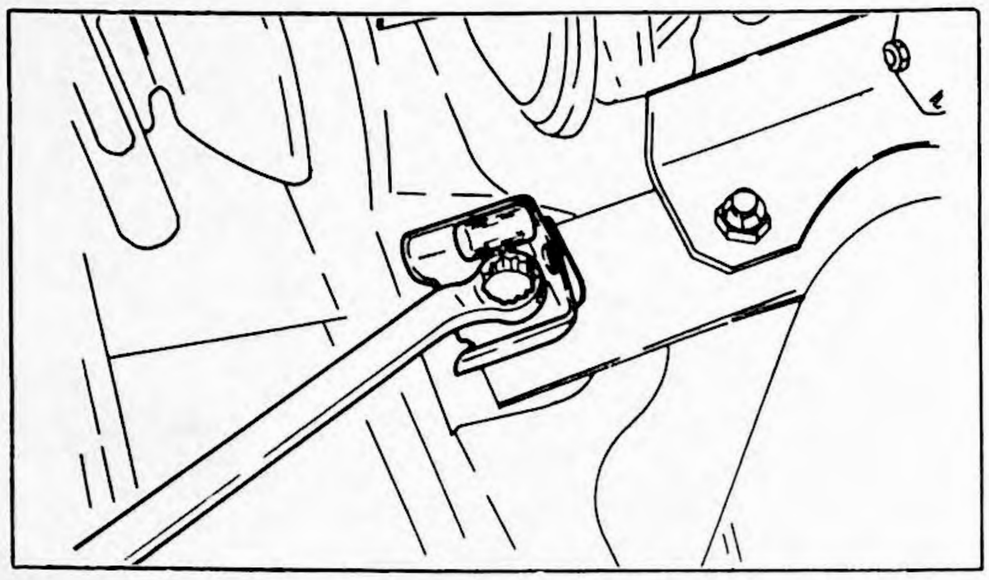

Fig. 2-29

ENGINE BRACKET

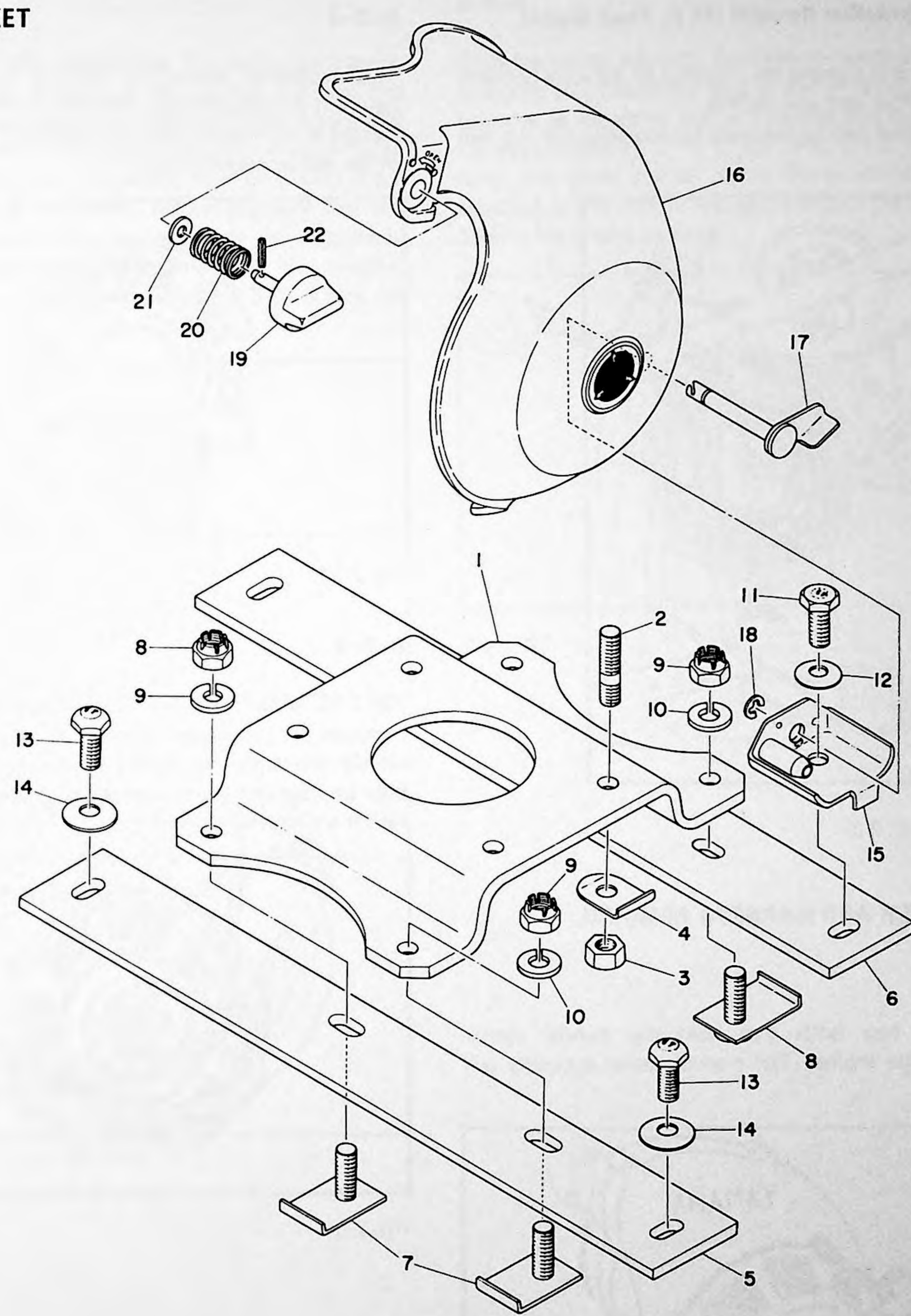

Fig. 2-30

Ref. No.	Description	Q'ty	Ref. No.	Description	Q'ty
1	BRACKET, engine upper	1	12	WASHER 1	1
2	BOLT, stud	4	13	BOLT, engine mounting 2	3
3	NUT	4	14	WASHER 2	3
4	WASHER, lock	4	15	BRACKET, guard drive	1
5	BRACKET, engine lower front	1	16	GUARD, drive	1
6	BRACKET, engine lower rear	1	17	ARM, fitting	1
7	BOLT	2	18	CIRCLIP (E-6)	1
8	BOLT	2	19	KNOB	1
9	NUT	4	20	SPRING 1	1
10	WASHER, spring	4	21	WASHER	1
11	BOLT, engine mounting	1	22	PIN, spring	1

2–1–16 Sub-Muffler Removal (15 in. Track Model)

A coil spring and a gasket are attached to the joint between the main muffler and sub muffler.
The sub muffler can be removed by screwing out the two 13 mm bolts.

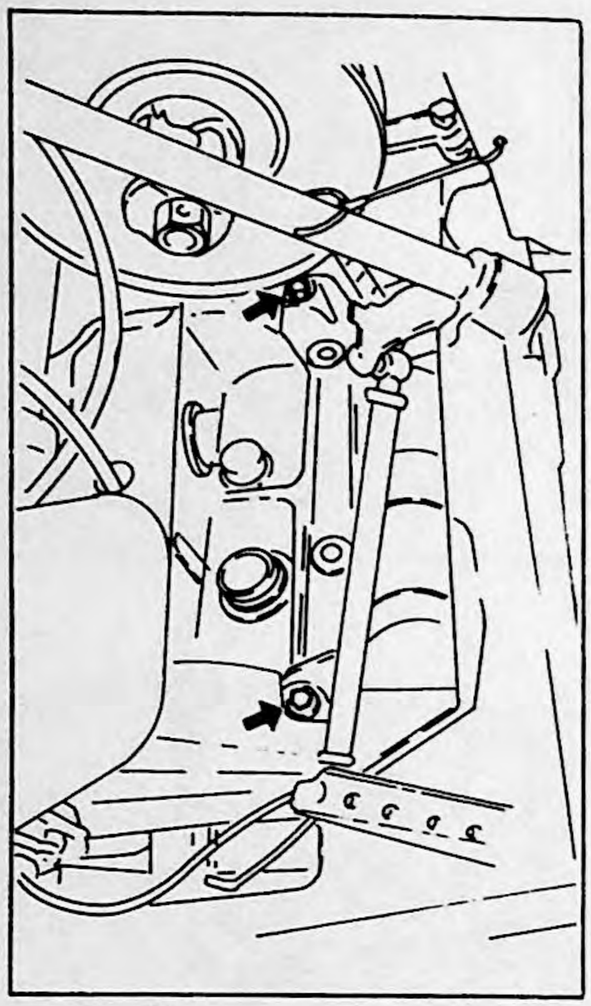

Fig. 2-31

2–2 STARTER AND MAGNETO REMOVAL

2–2–1

Remove the four bolts that hold the manual starter assembly to the engine. The manual starter assembly will now slide off.

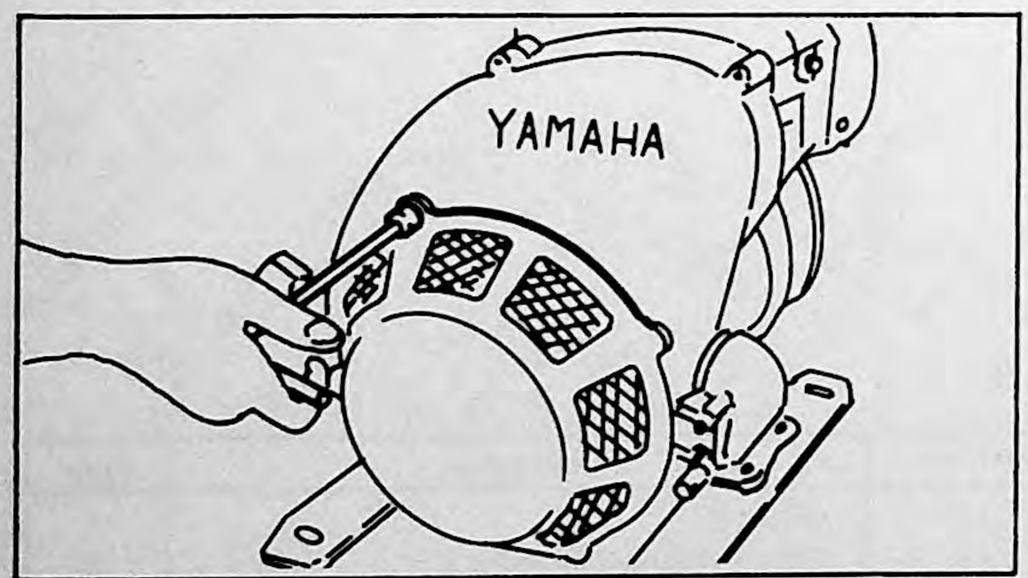

Fig. 2-32

2–2–2

This illustration shows the inside of the starter assembly before it is disassembled. Removal of the nut and washers located in the middle makes it possible to dismantle the rest of the starter assembly parts.

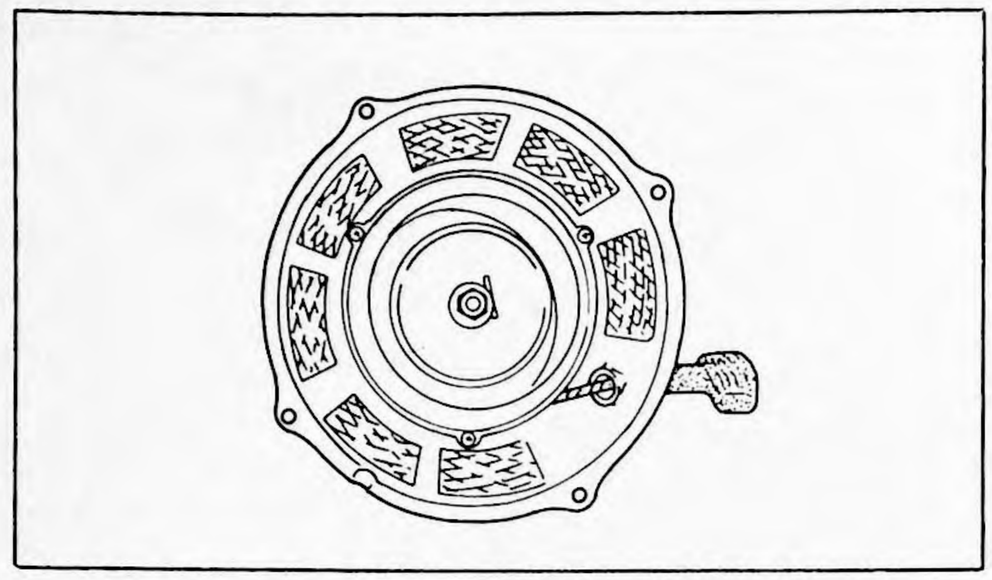

Fig. 2-33

2–2–3

Fig. 2-34 shows the nut and washers and drive plate removed for inspection should not be necessary to completely dismantle the starter assembly. This step would only be followed if replacement of the starter rope or main return spring was required.

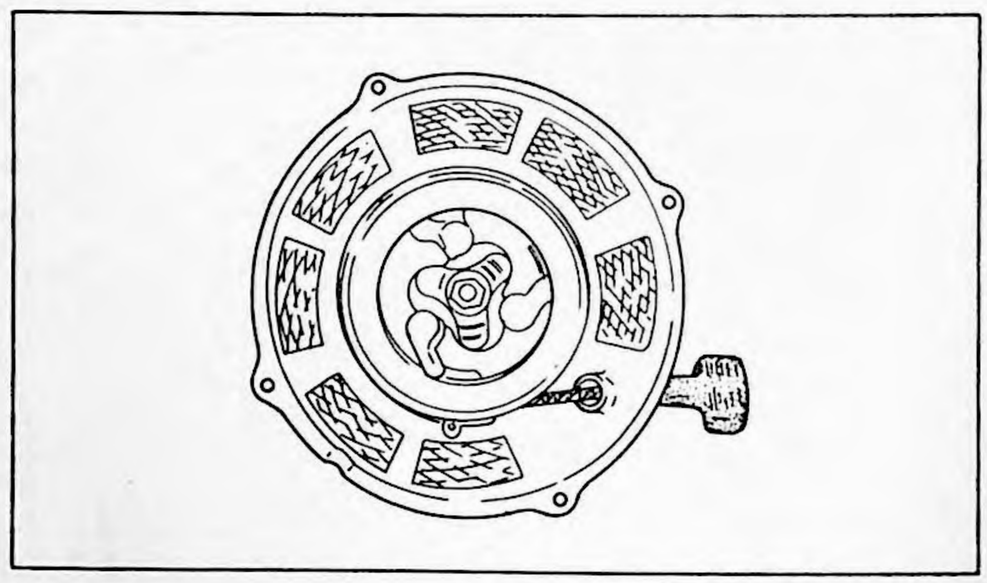

Fig. 2-34

2–2–4

It is important when reassembling the main return spring that the spring be installed in the correct position and coiled in the proper direction. Notice in the picture that the spring is hooked to the center shaft and wound outward in a clockwise direction. The spring must be wound in the correct direction or the entire starter assembly will not function. It would then be necessary to completely disassemble the starter assembly to correct the mistake, preload the starter spring with 1/3 ~ 2/3 of a turn for positive return.

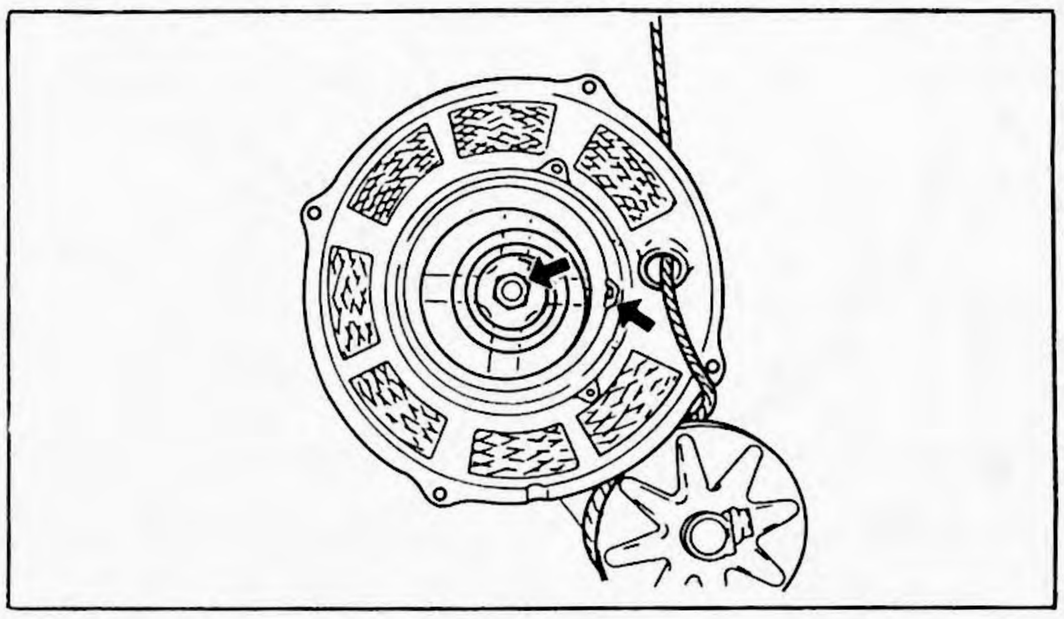

Fig. 2-35

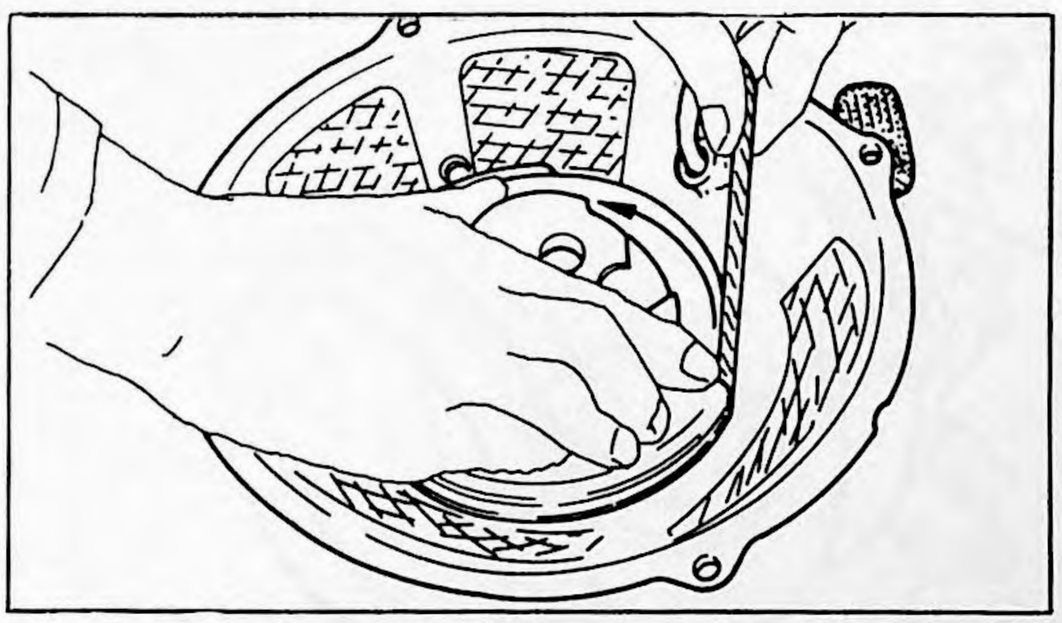

Fig. 2-36

2–2–5

Once the starter assembly has been completely reassembled, it should be checked for proper starter action. Follow the example as shown in the picture and pull the starter rope out approximately 3" ~ 5" (76 mm ~ 127 mm). At this time, the three starter pawls should come out. When attached to the engine this would engage the starter pulley, causing the engine to turn.

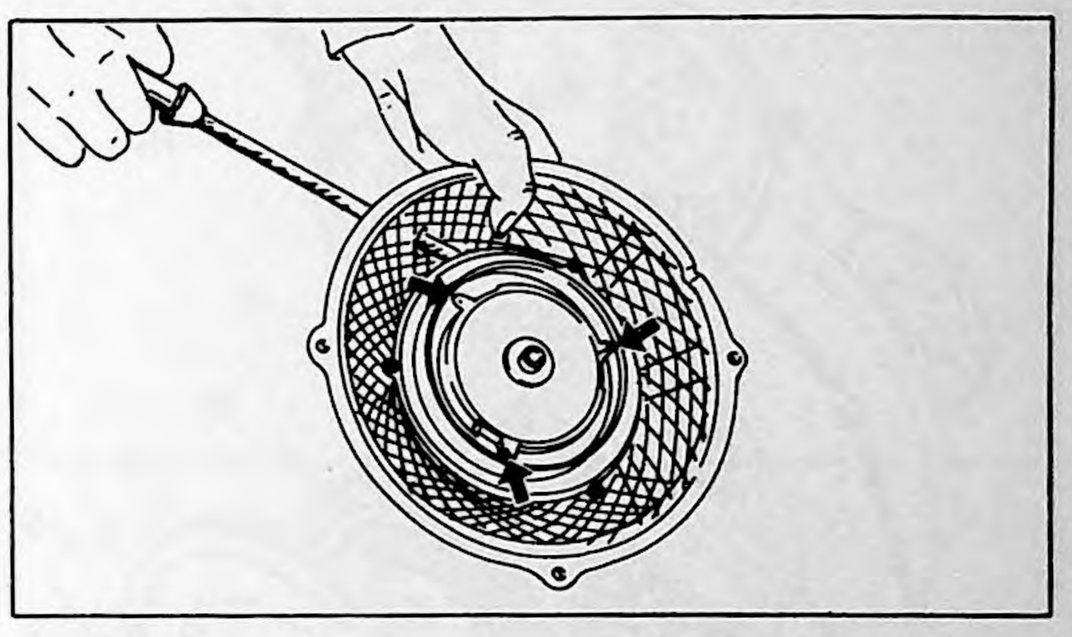

Fig. 2-37

STARTER

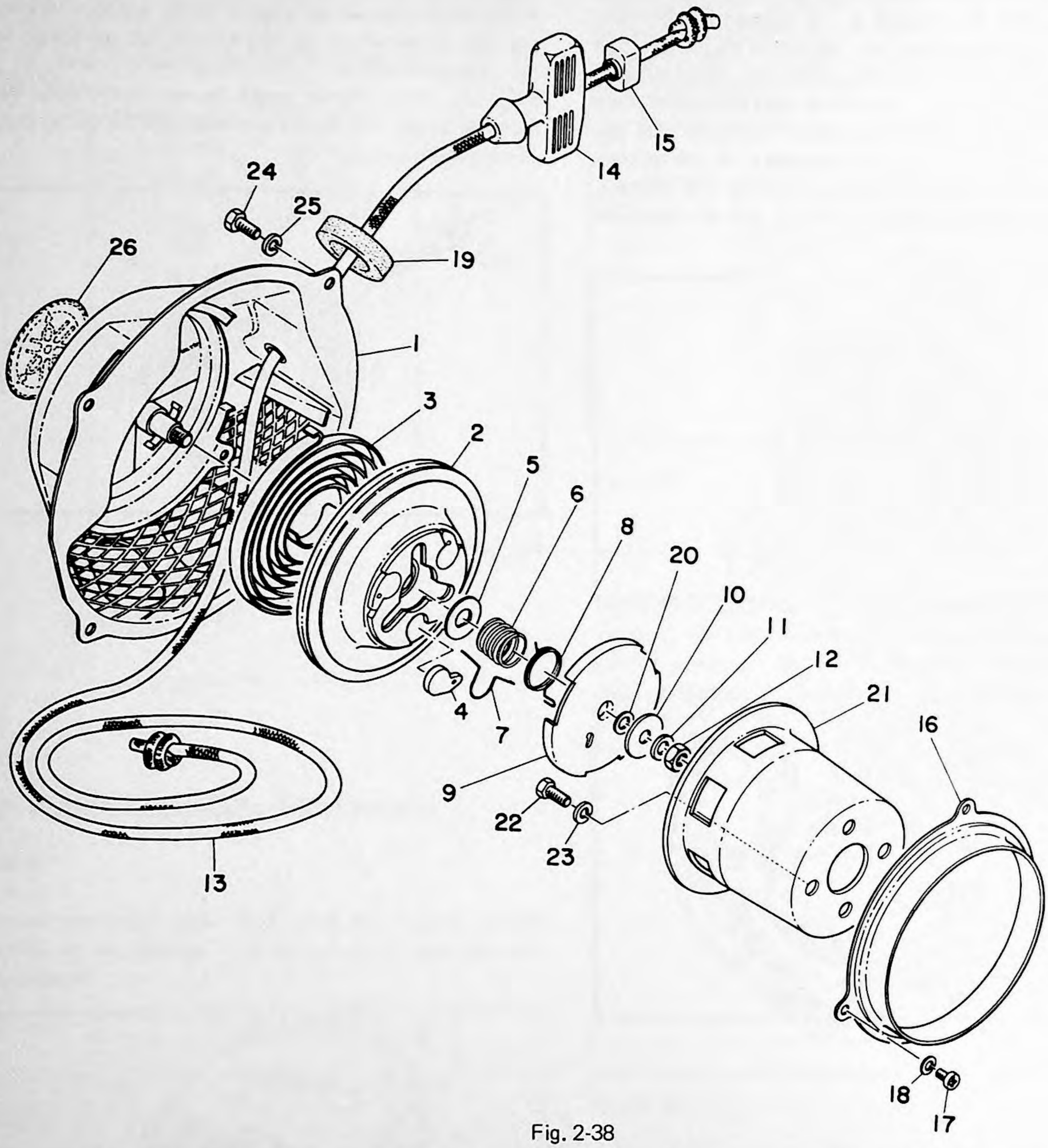

Fig. 2-38

Ref. No.	Description	Q'ty	Ref. No.	Description	Q'ty
0-1	STARTER ASS'Y	1	14	HANDLE, starter	1
1	CASE, starter	1	15	CONNECTOR	1
2	DRUM, sheave	1	16	COVER, sheave	1
3	SPRING, starter	1	17	SCREW, panhead	3
4	PAWL, drive	3	18	WASHER, spring	3
5	WASHER, thrust	1	19	KNOB, stopper ring	1
6	SPRING, drive plate	1	20	SHIM, drive plate (8.0-11.5-0.6)	U.R
7	SPRING, return	3	21	PULLEY, starter	1
8	SPRING, return	1	22	BOLT	3
9	PLATE, drive	1	23	WASHER, spring	3
10	WASHER, flat	1	24	BOLT	4
11	WASHER, spring	1	25	WASHER, spring	4
12	NUT	1	26	EMBLEM	1
13	ROPE	1			

2–3 REMOVAL OF PRIMARY SHEAVES

2–3–1

The primary sheaves cap assembly is attached to the crankshaft on the left side of the engine. Removal of the primary sheave bolt allows the primary sheave cap assembly to slide off the end of the crankshaft. There is a lock washer to be bent down.

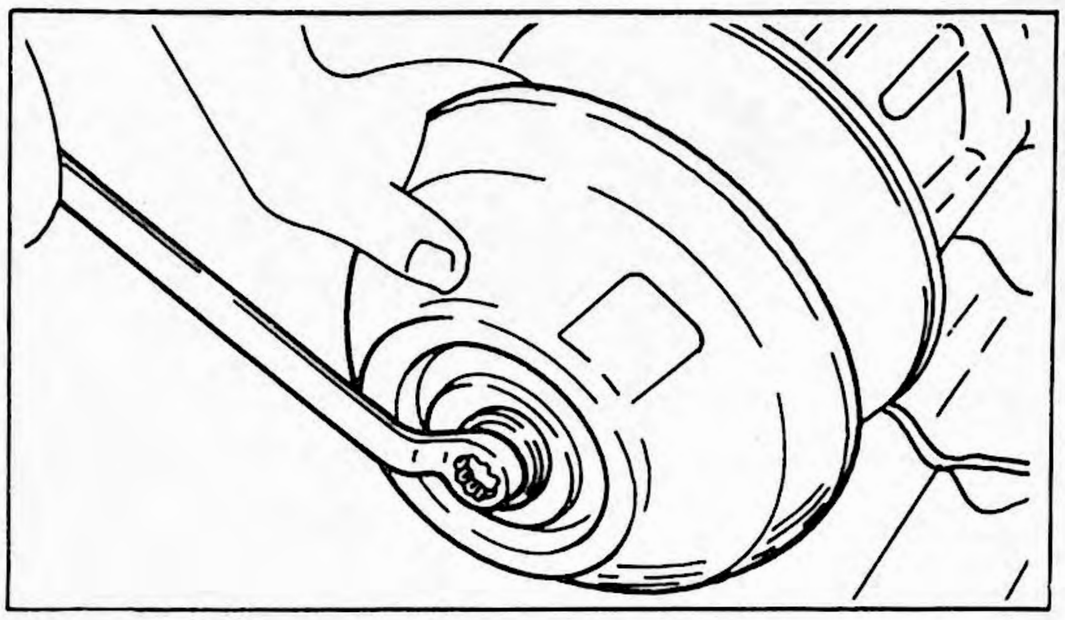

Fig. 2-39

2–3–2

Remove the circlip and remove the collar. Remove the washer (1) and sliding sheave from the crankshaft. Now, the primary spring can be removed.

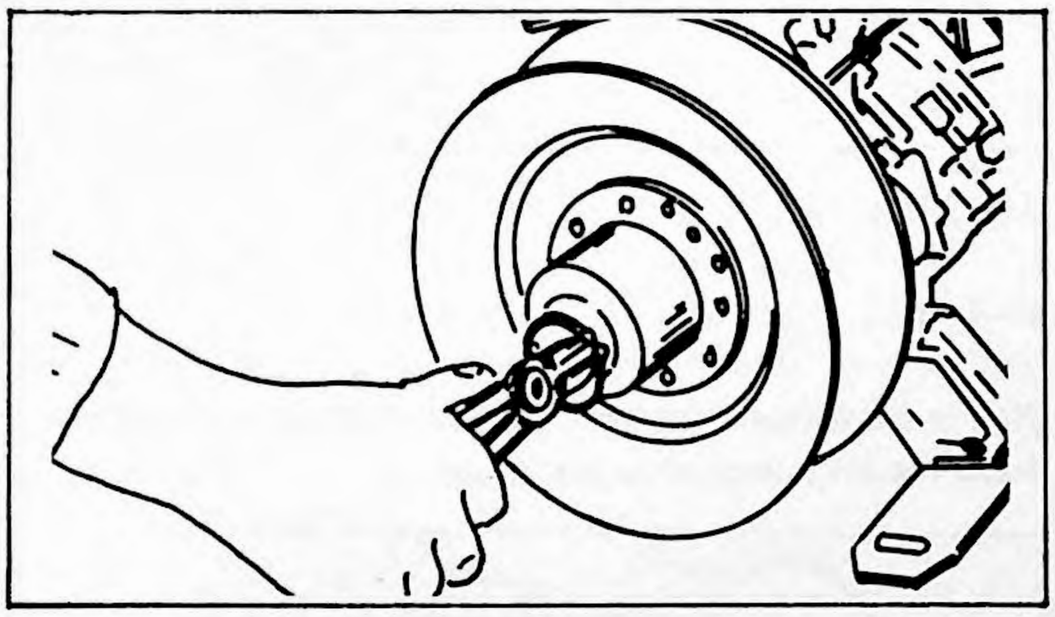

Fig. 2-40

2–3–3

This illustration shows the primary sheave cap after it has been removed and taken apart.
The parts in relation to each other as they have been removed.

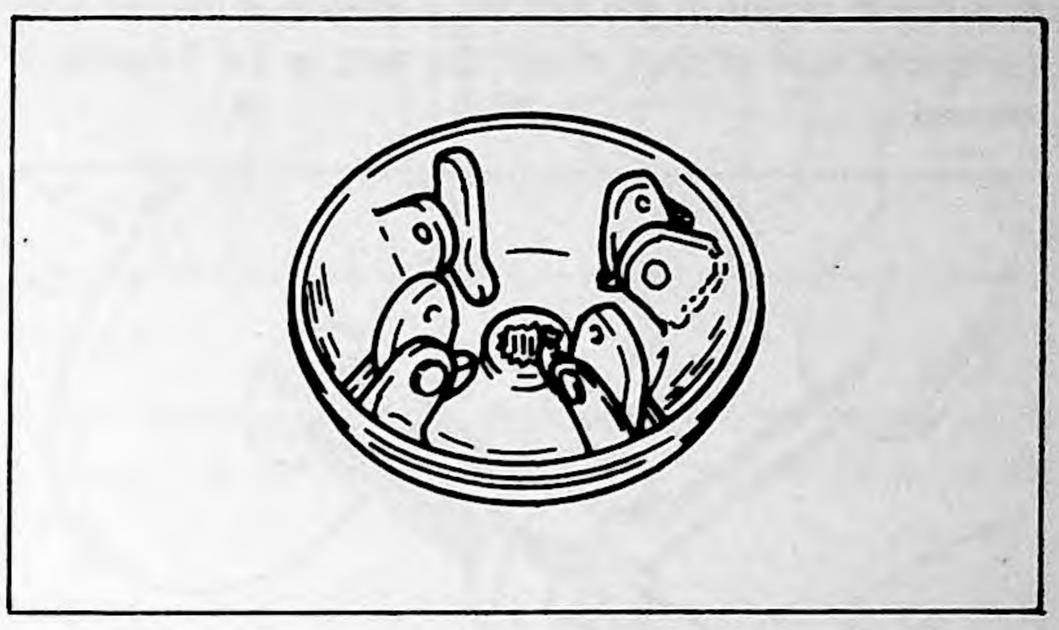

Fig. 2-41

2–3–4

The bearing nut must be removed in order to continue disassembly. The special bearing ring nut removal tool is used as shown to take the nut off the end of the shaft.
Once this ring nut has been removed, the spring washer spring seat and bearing can be slipped off, usually by hand.

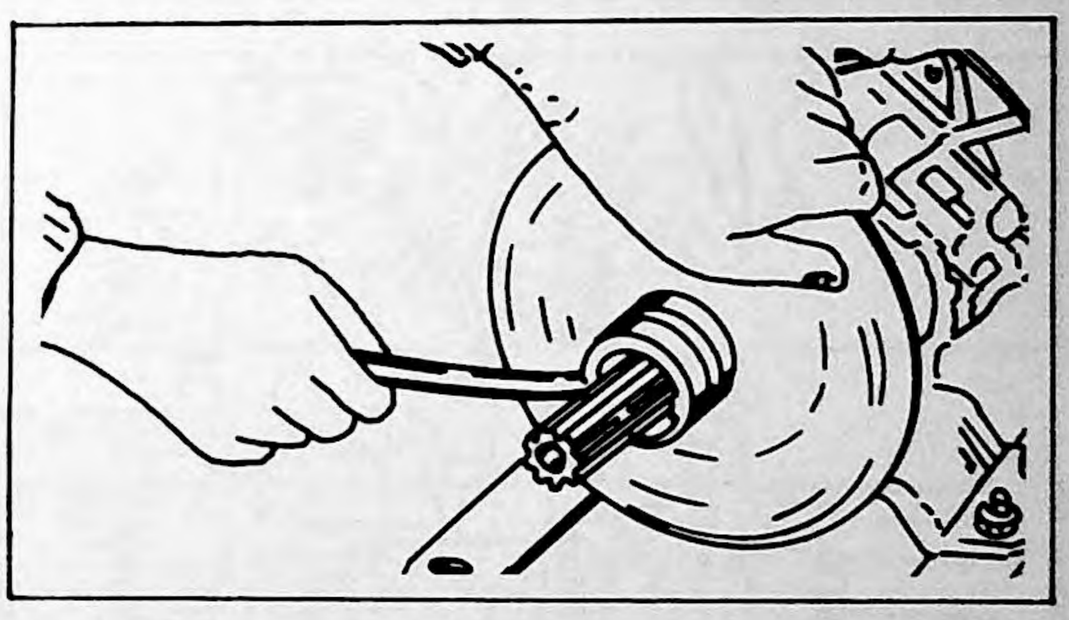

Fig. 2-42

2–3–5

A taper-fit holds the inner primary sheave to the shaft.
A special tool is used to pull the inner sheave off the shaft. This tool is the same one that was used to remove the special tool in place rather than the short ones.
As you will notice in the picture, a wrench is used to hold the special tool so that it will not turn as the T-handle is screwed in.

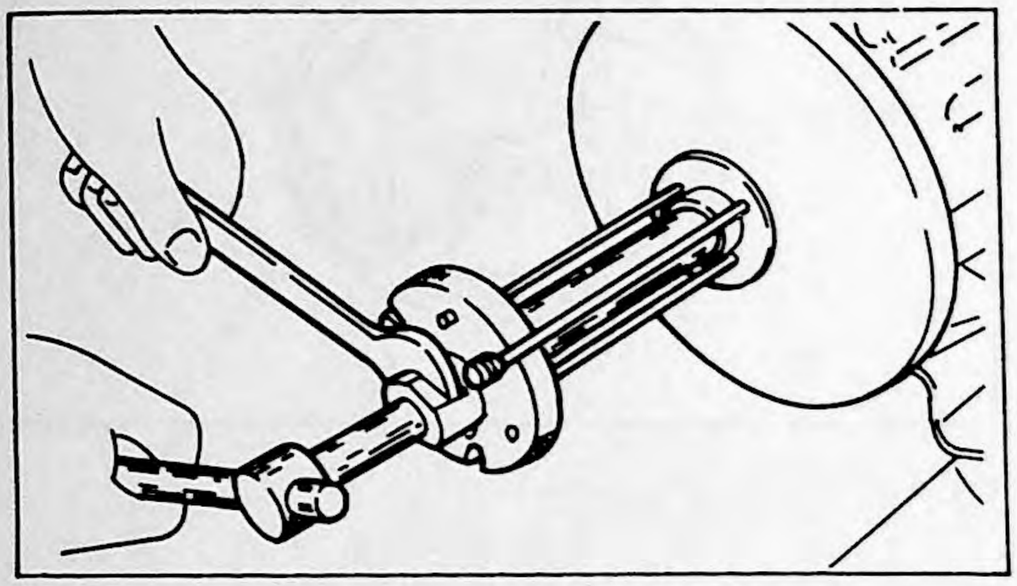

Fig. 2-43

2–4 REMOVING THE OIL PUMP

2–4–1

Remove the two oil delivery pipe from the oil pump.

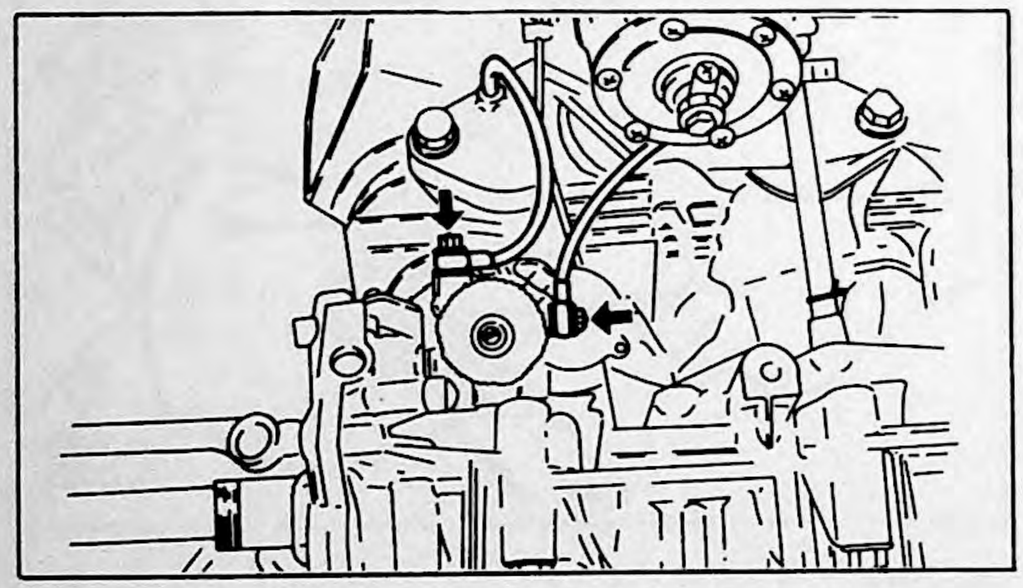

Fig. 2-44

2–4–2

Remove the four 10 mm bolts and one hexagon bolt, and remove the oil pump drive gear cover.
The oil pump can be removed, together with the oil pump drive gear cover.

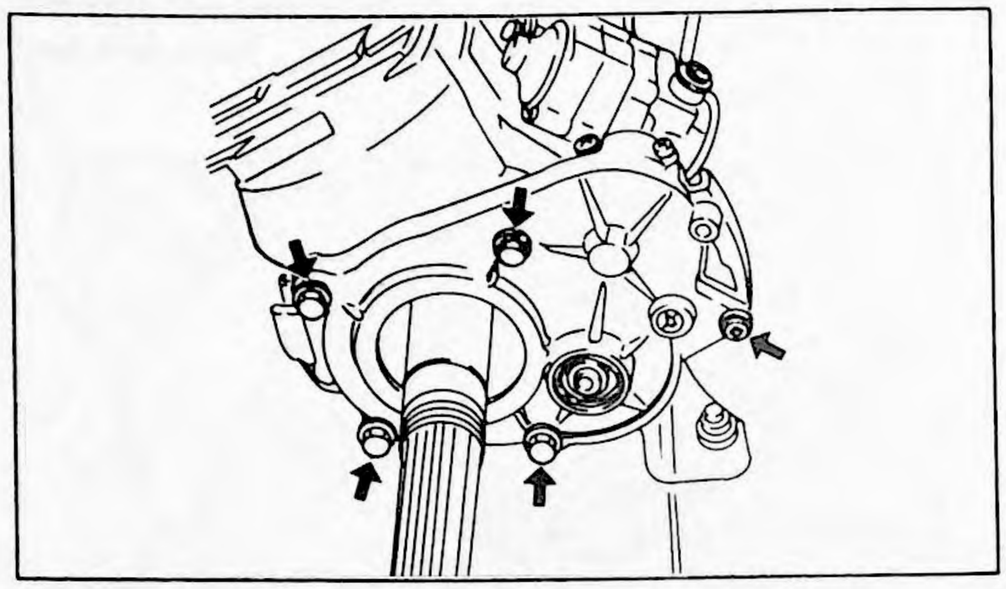

Fig. 2-45

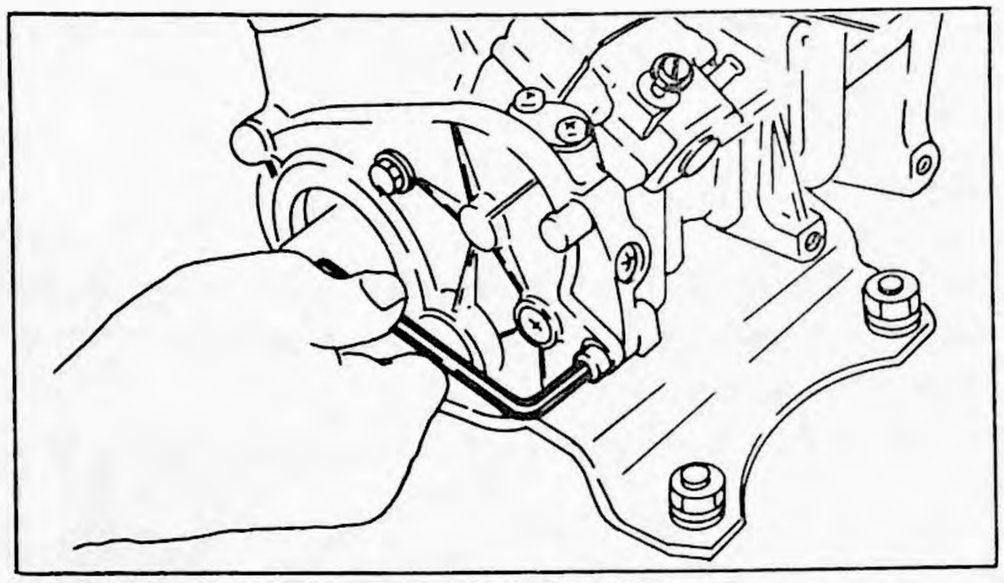

Fig. 2-46

2–4–3

Remove the two panhead screws, and remove the oil pump from the oil pump drive gear cover.

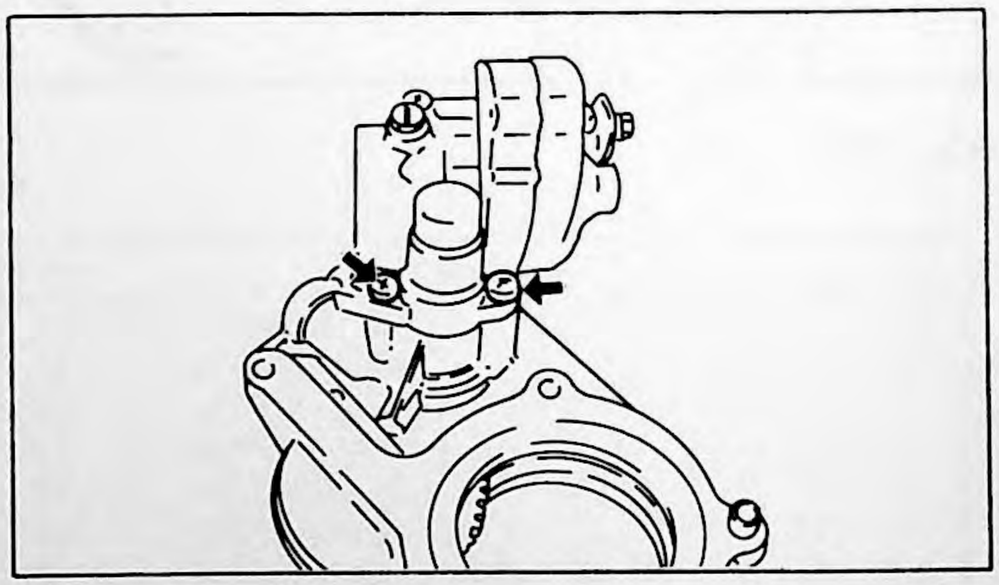

Fig. 2-47

2–4–4

To separate oil pump drive cover 1 from oil pump drive cover 2, remove one panhead screw on gear cover 1 and one flat head screw on gear cover 2.

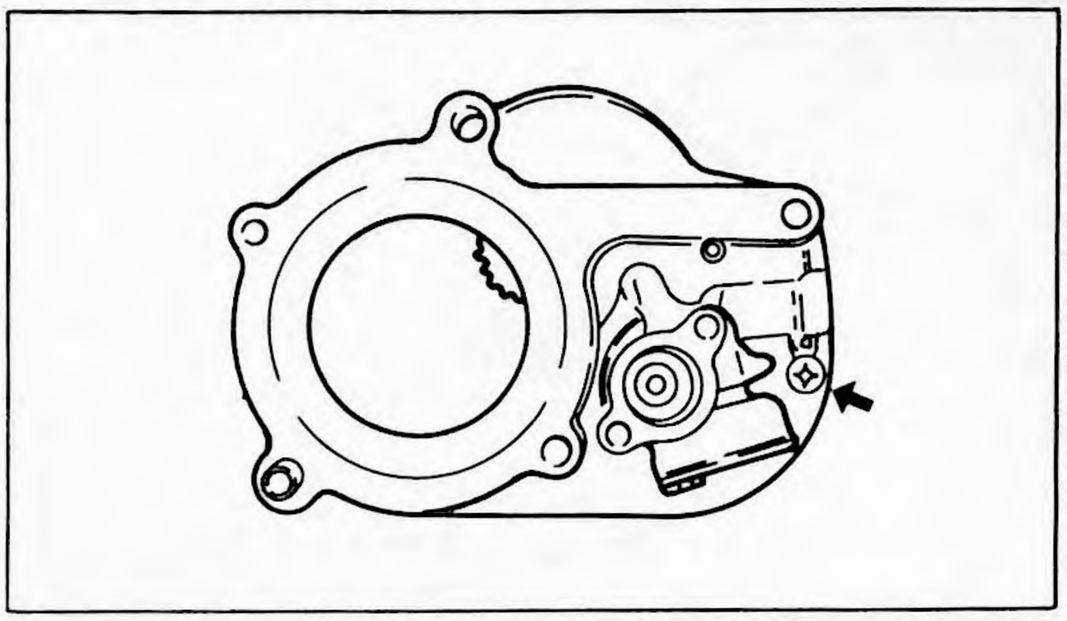

Fig. 2-48

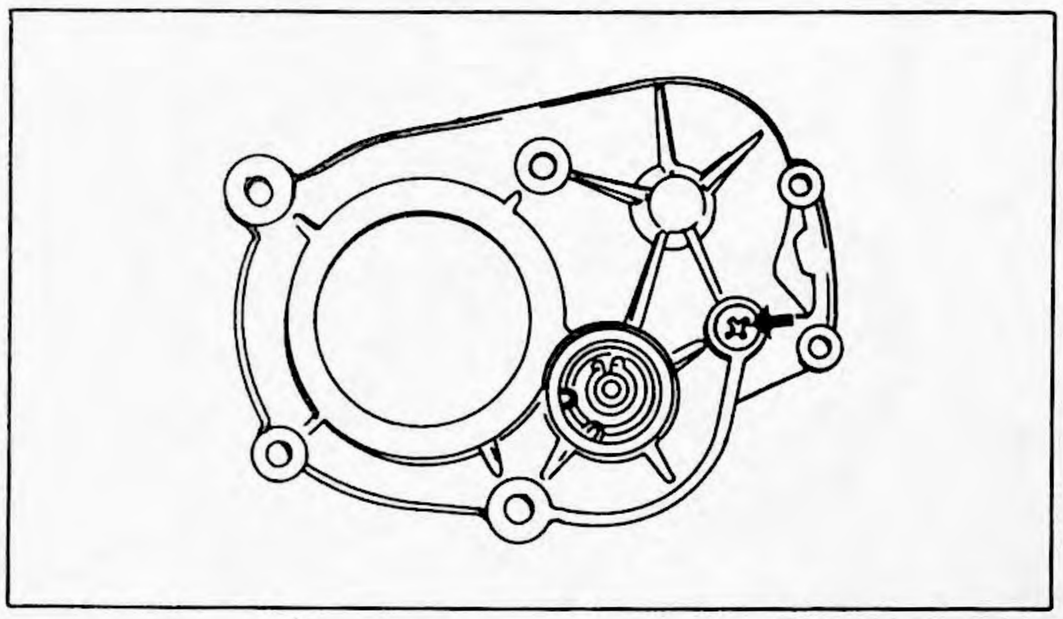

Fig. 2-49

2–4–5

When installing the idle gear and drive gear 2, coat them with anti-freeze grease Beacon 325 or Aero Shell 7A.

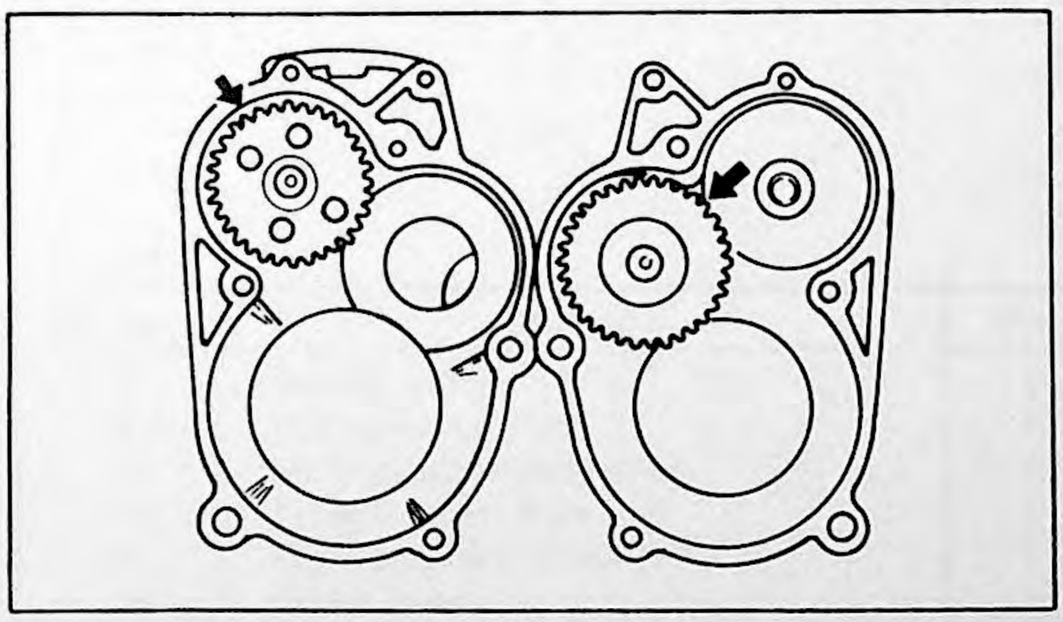

Fig. 2-50

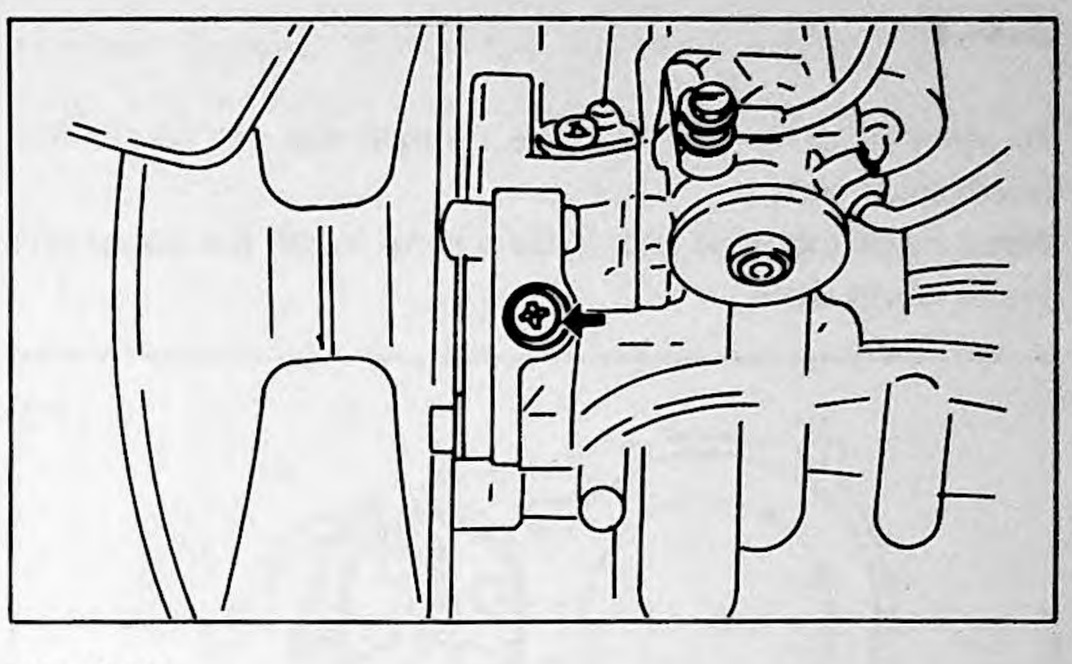

Fig. 2-51

When greasing without demounting the engine, it is necessary to remove the panhead screw indicated by the arrow.

2–4–6

To remove the idle gear, first remove the circlip from the outside of oil pump drive cover 2.

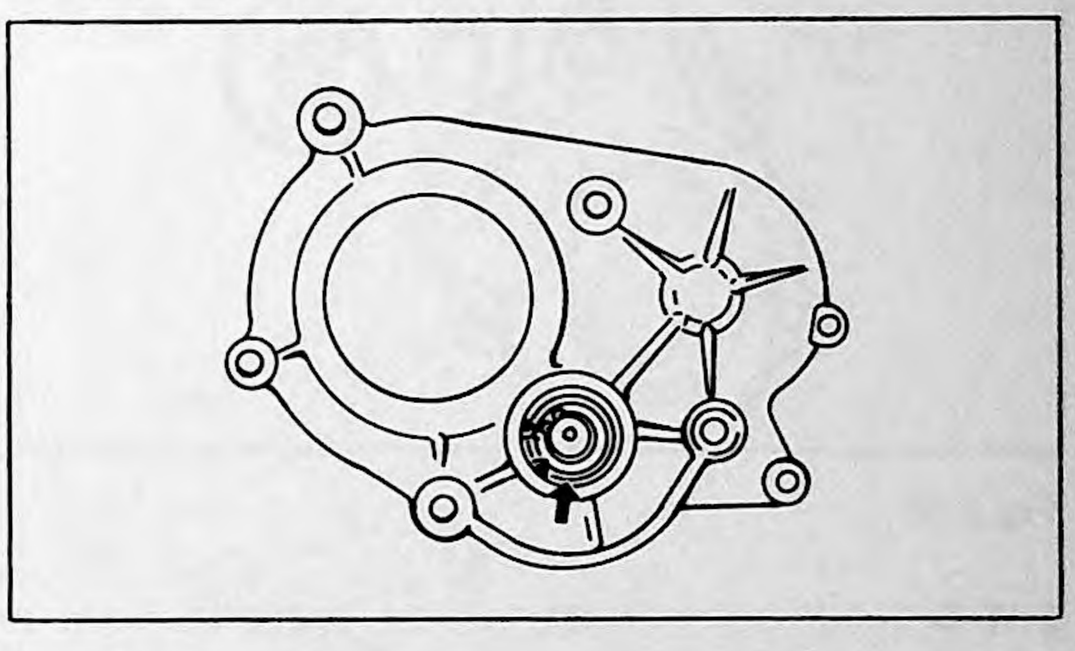

Fig. 2-52

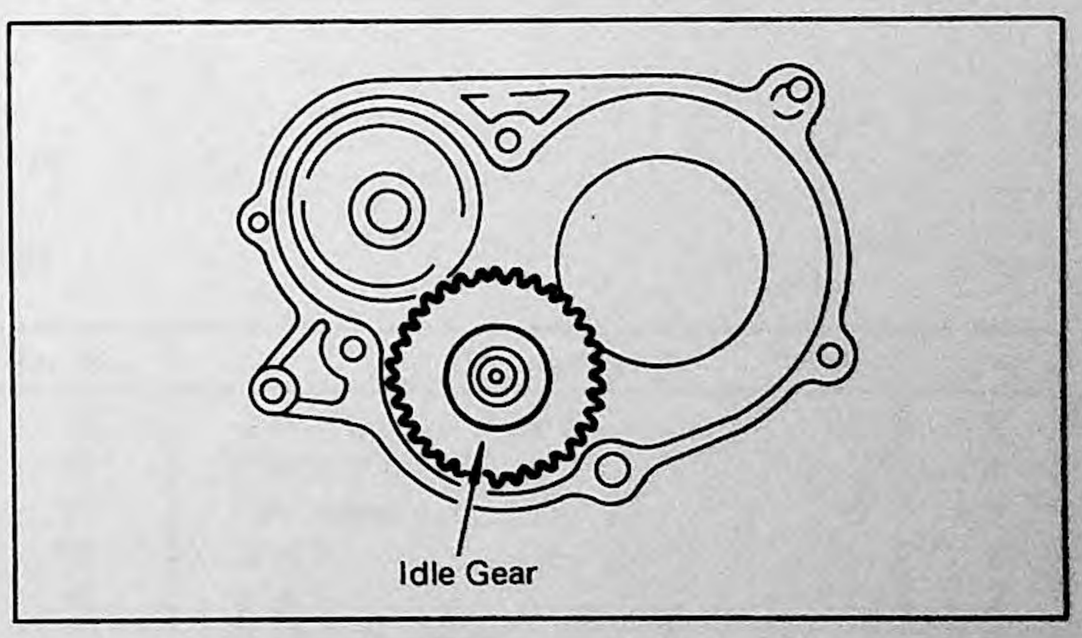

Fig. 2-53

2–4–7

To remove drive gear 2, first remove the circlip on the worm shaft end.
When installing drive gear 2, be sure to install the dowel pin in the worm shaft.

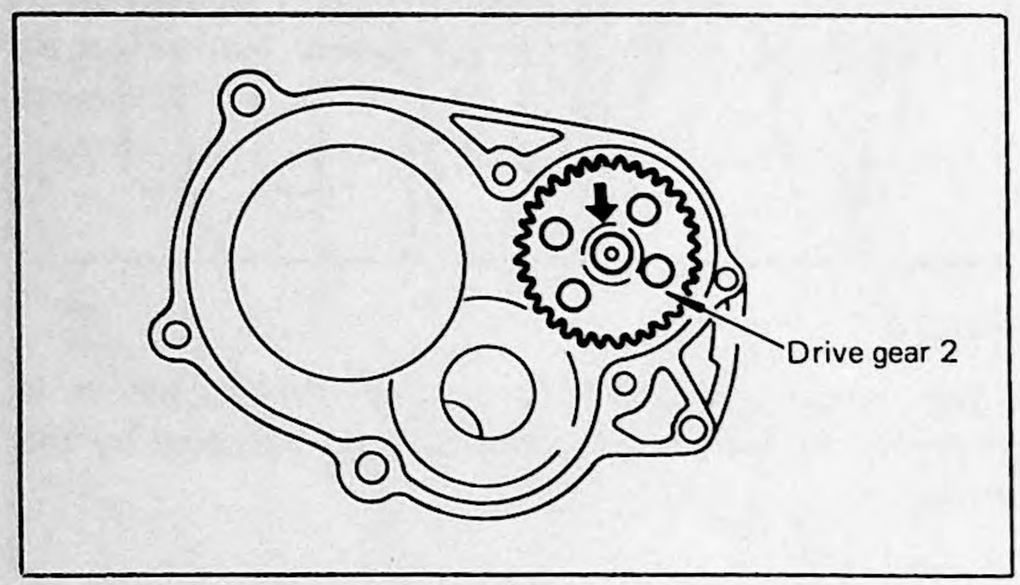

Fig. 2-54

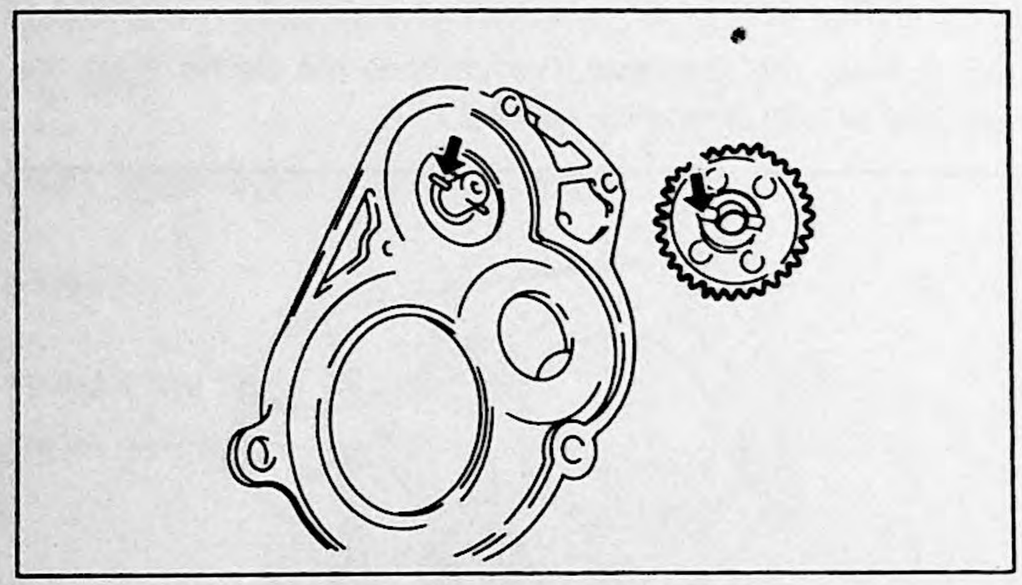

Fig. 2-55

2–4–8

For installation, reverse the procedure for disassembly.

2–4–9

The ring gear is attached to the reverse side of the primary fixed sheave. When installing, coat the ring gear with anti-freeze grease Beacon 325 or Aero Shell 7A.

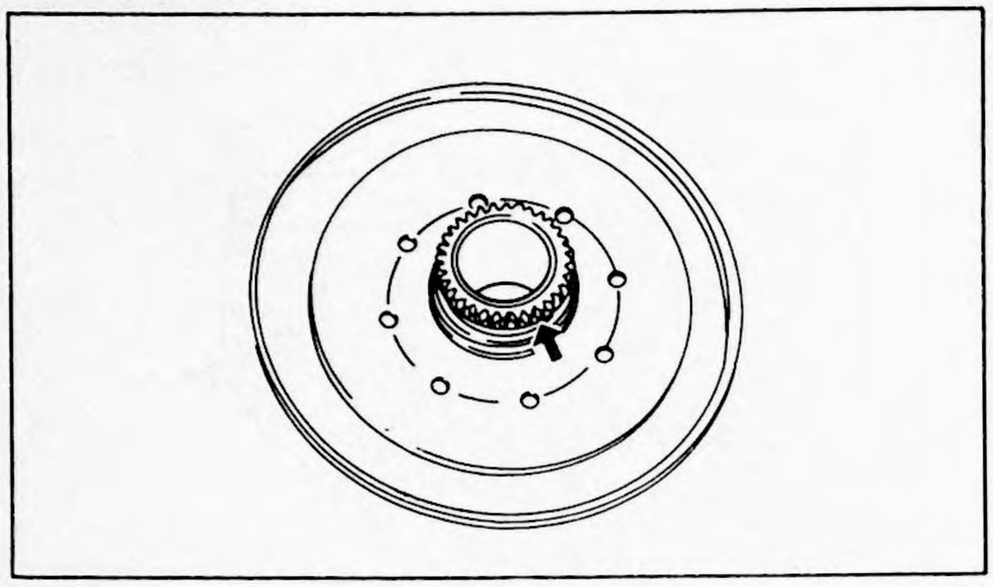

Fig. 2-56

PUMP DRIVE GEAR

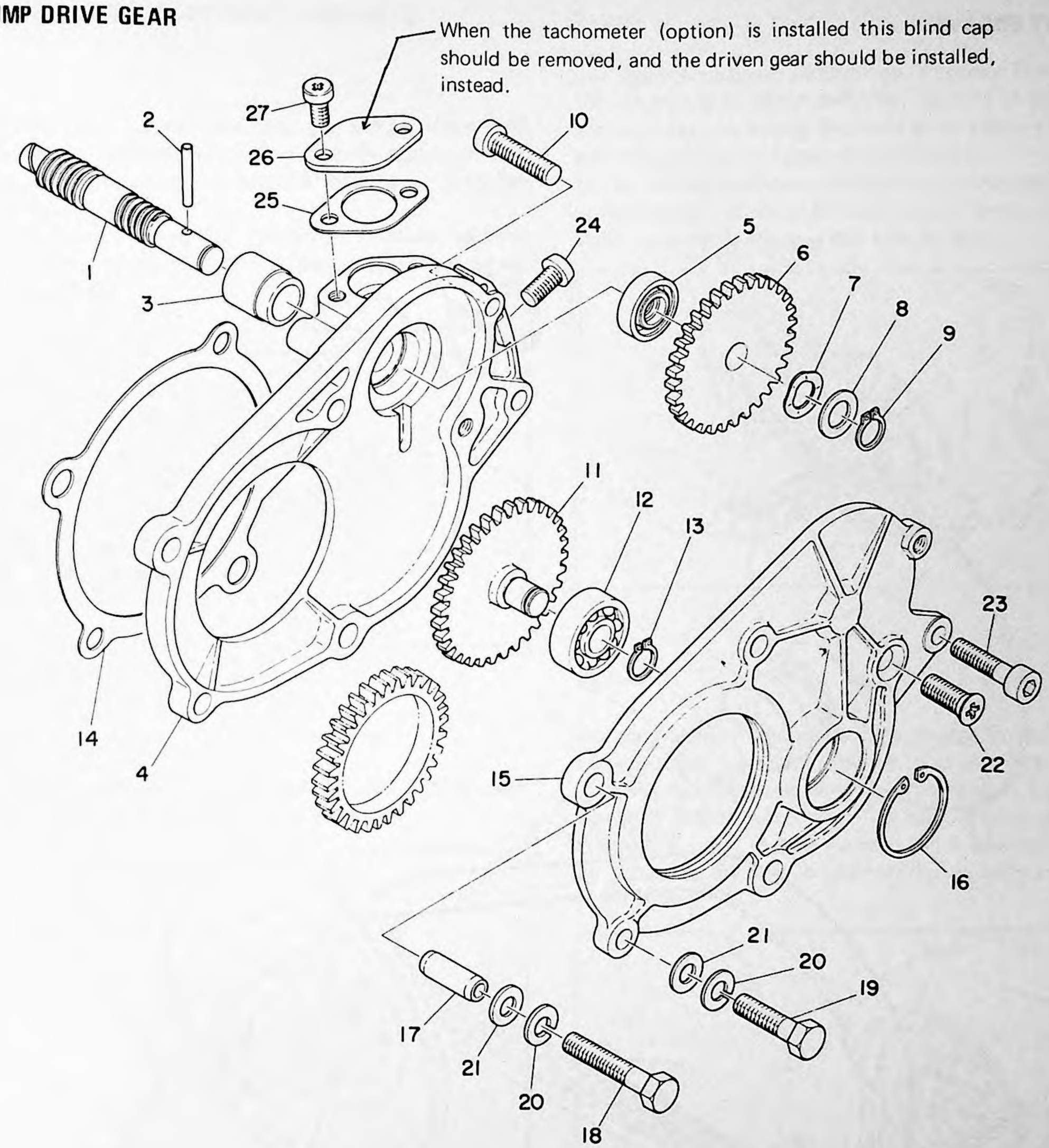

Fig. 2-57

Ref. No.	Description	Q'ty	Ref. No.	Description	Q'ty
1	SHAFT, worm	1	15	COVER, pump drive 2	1
2	PIN, dowel (3-21.8)	1	16	CIRCLIP (R-26)	1
3	METAL, worm shaft outer	1	17	PIN, dowel	2
4	COVER, pump drive 1	1	18	BOLT	2
5	OIL SEAL (S-10-21-5)	1	19	BOLT	2
6	GEAR, drive 2	1	20	WASHER, spring	4
7	WASHER, wave	1	21	WASHER, plain	5
8	PLATE, cam thrust	1	22	SCREW, flathead	1
9	CIRCLIP (S-10)	1	23	BOLT	1
10	SCREW, panhead	1	24	SCREW, panhead	1
11	GEAR, idle	1	25	GASKET	1
12	BEARING (B6000 2RS)	1	26	CAP, blind	1
13	CIRCLIP (S-10)	1	27	SCREW, panhead	2
14	GASKET	1			

PRIMARY SHEAVE

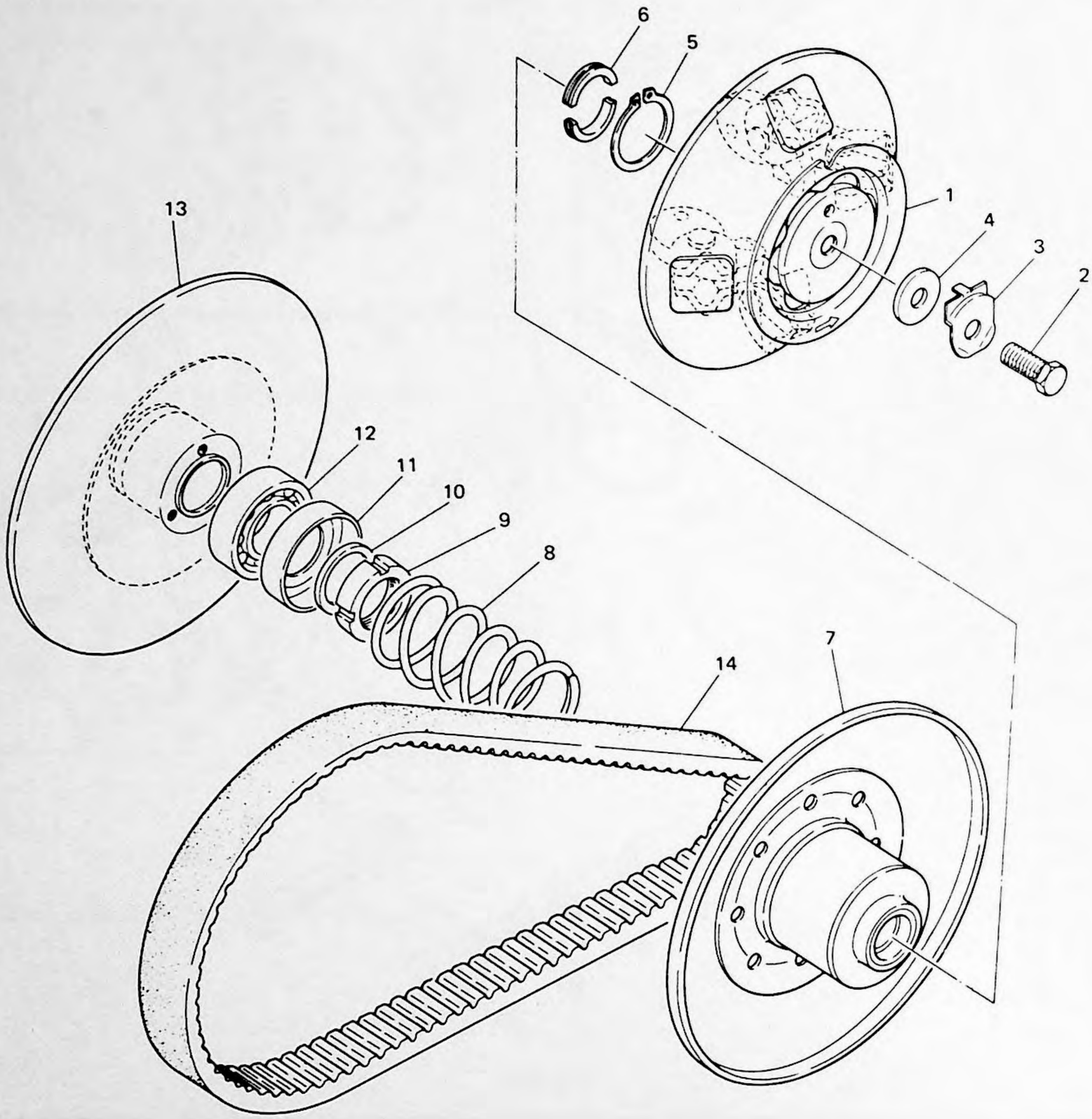

Fig. 2-58

Ref. No.	Description	Q'ty	Ref. No.	Description	Q'ty
1	PRIMARY SHEAVE CAP COMP.	1	8	SPRING, primary	1
2	BOLT	1	9	NUT, bearing	1
3	WASHER, lock	1	10	WASHER (28-36-2)	1
4	WASHER (10.2-28-3.2)	1	11	SEAT, spring	1
5	CIRCLIP (S-30)	1	12	BEARING (6205)	1
6	COLLAR	2	13	PRIMARY FIXED SHEAVE COMP.	1
7	PRIMARY SLIDING SHEAVE COMP.	1	14	V-BELT	1

2–5 REMOVAL OF FLYWHEEL MAGNETO

2–5–1

With the starter assembly removed you will now be able to remove the magneto assembly. The first step in this procedure is removed the flywheel securing nut a socket wrench (26 mm).
(In this case, to loosen or tighten the flywheel, a "bar" should be inserted into the hole in the pulley. The flywheel can be locked.)

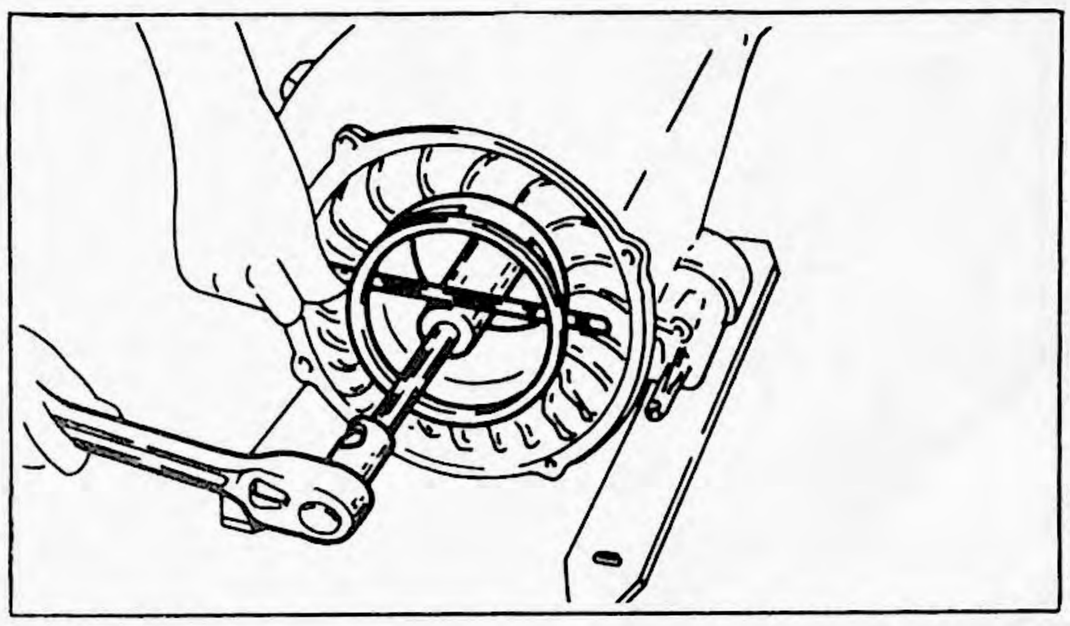

Fig. 2-59

2–5–2

Remove the bolts that hold the starter pulley. Once these bolts are removed, the pulley can be set aside.

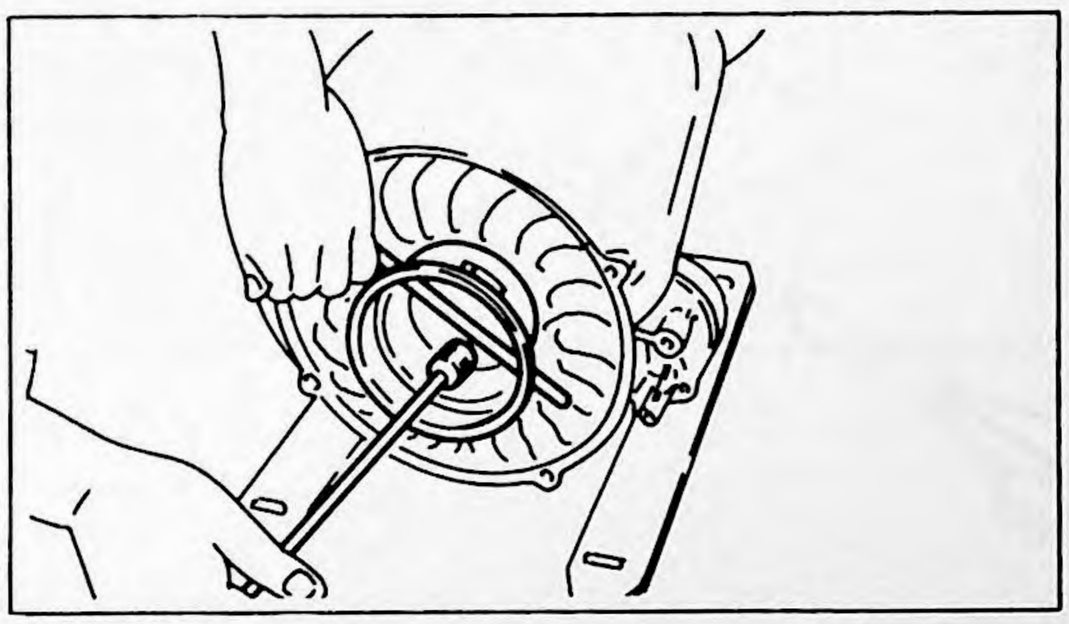

Fig. 2-60

2–5–3

The flywheel magneto can now be removed. This requires the use of special puller that you will find in our special tool kit. Be sure to use the three short screws that come with the puller when removing the flywheel.
(Note: Immediately after the flywheel is removed, take the woodruff key off the shaft and in same satisfactory way attach it to the flywheel so that it is not lost.)

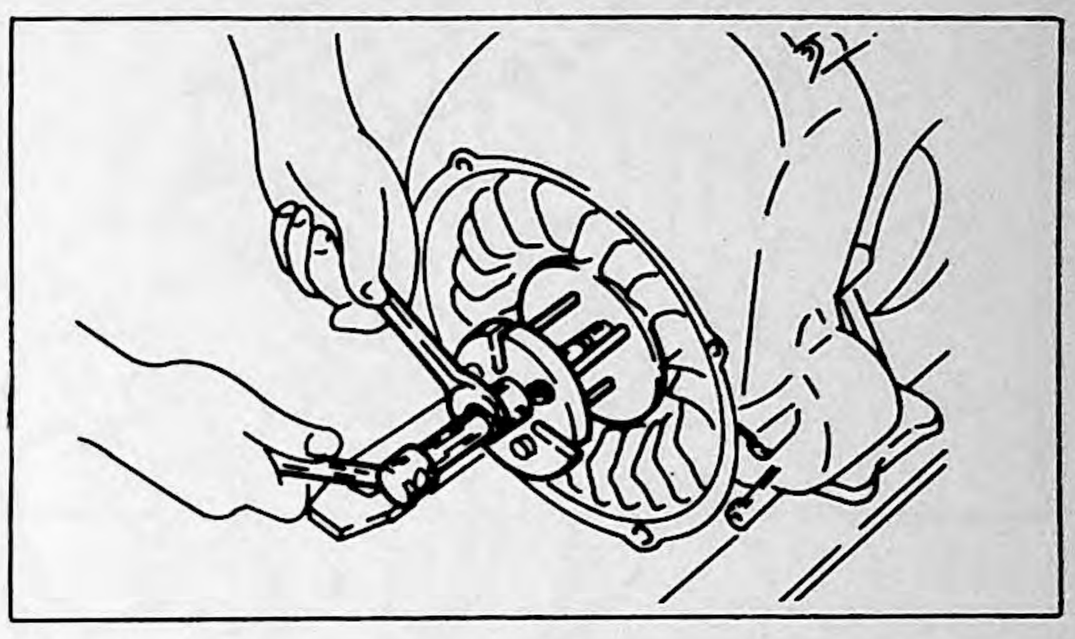

Fig. 2-61

2–5–4

All parts of the magneto assembly, except for the magneto backing plate, have been removed. The only time that the magneto backing plate need be removed is in the case of complete engine teardown. The backing plate has to be removed in order to split the cases and this is accomplished by removing the four hold-down screws, with an impact screw driver.

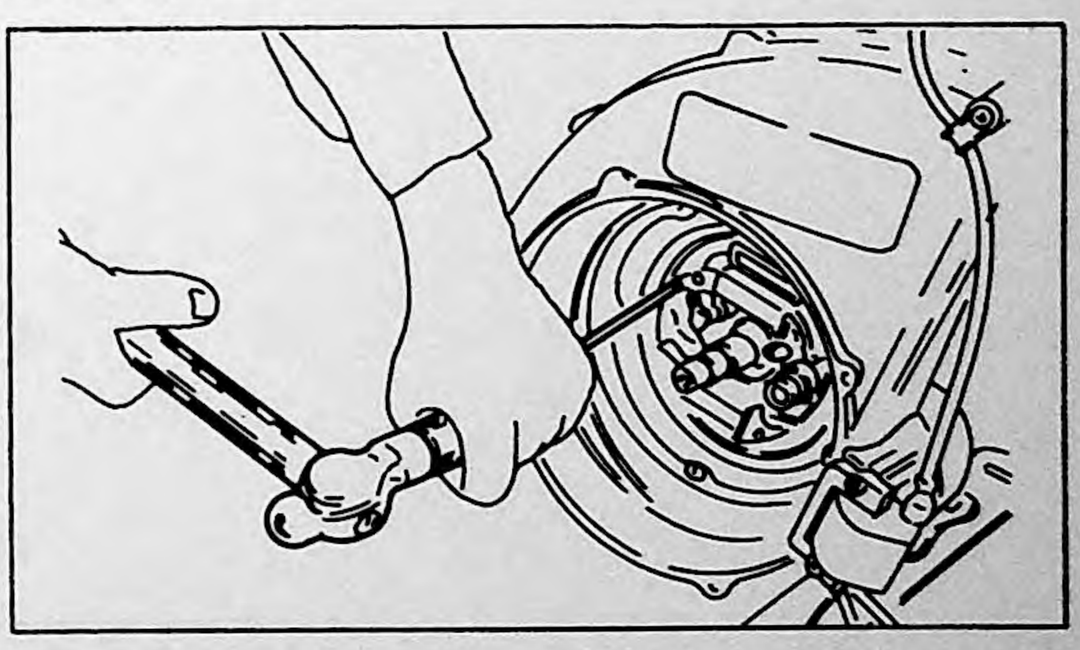

Fig. 2-62

FLYWHEEL MAGNETO

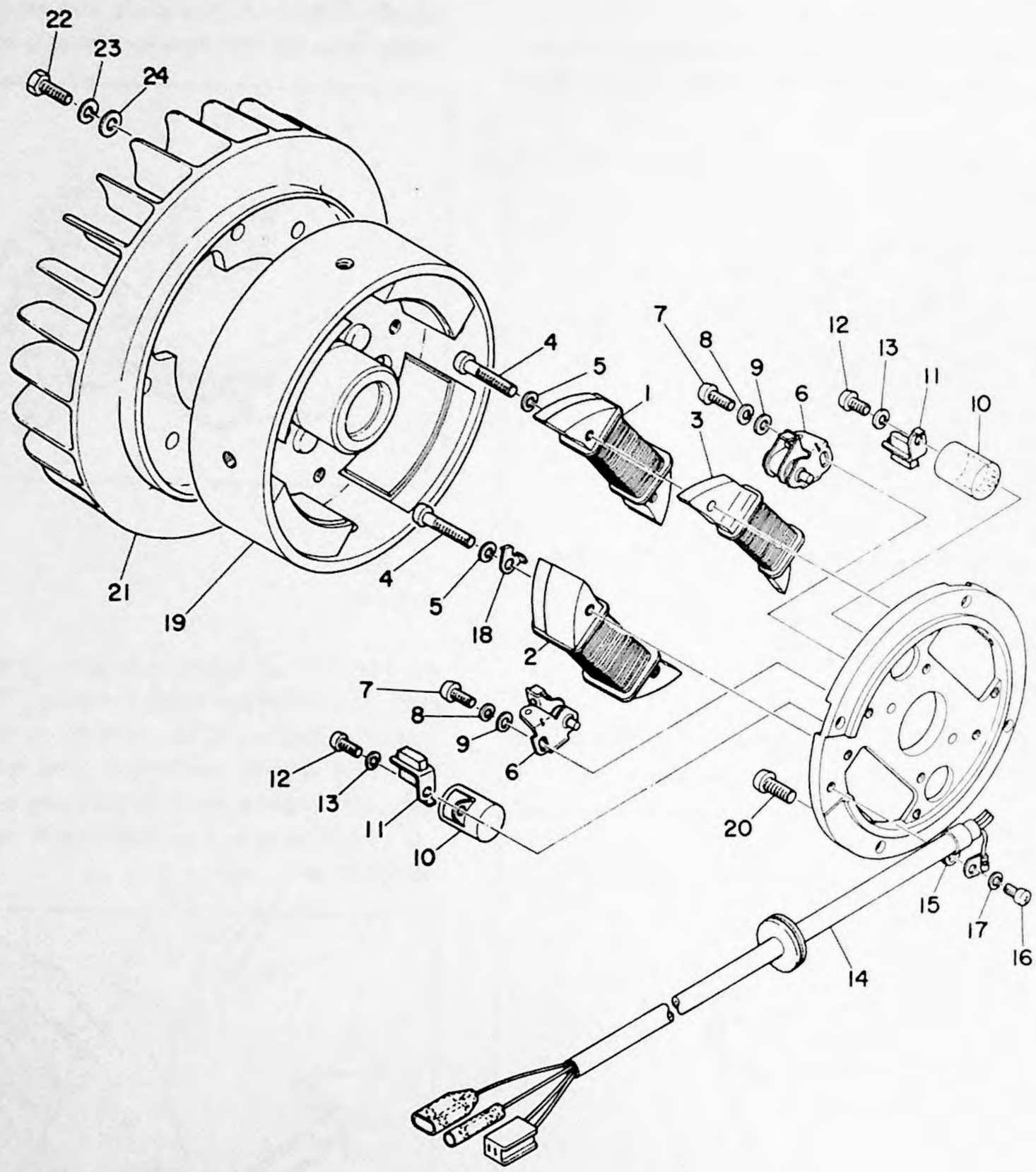

Fig. 2-63

Ref. No.	Description	Q'ty	Ref. No.	Description	Q'ty
0-1	FLYWHEEL MAGNETO ASS'Y	1	13	WASHER, spring	2
1	COIL, source	1	14	LEAD WIRE ASS'Y	1
2	COIL, lighting 1	1	15	CLAMP, lead	1
3	COIL, lighting 2	1	16	SCREW, panhead (4-8)	1
4	SCREW, panhead (5-25)	4	17	WASHER, spring	1
5	WASHER, spring	4	18	PLATE, timing	1
6	CONTACT BREAKER ASS'Y	2	19	ROTOR ASS'Y	1
7	SCREW, panhead (4-12)	2	20	SCREW, panhead	4
8	WASHER, spring	2	21	FAN	1
9	WASHER, plain	2	22	BOLT	6
10	CONDENSER	2	23	WASHER, spring	6
11	LUBRICATOR	2	24	WASHER	6
12	SCREW, panhead (4-10)	2			

2–6 REMOVAL OF FANCASE AND AIR SHROUD

2–6–1

The upper air shroud is held in place by 6 phillips head screws.

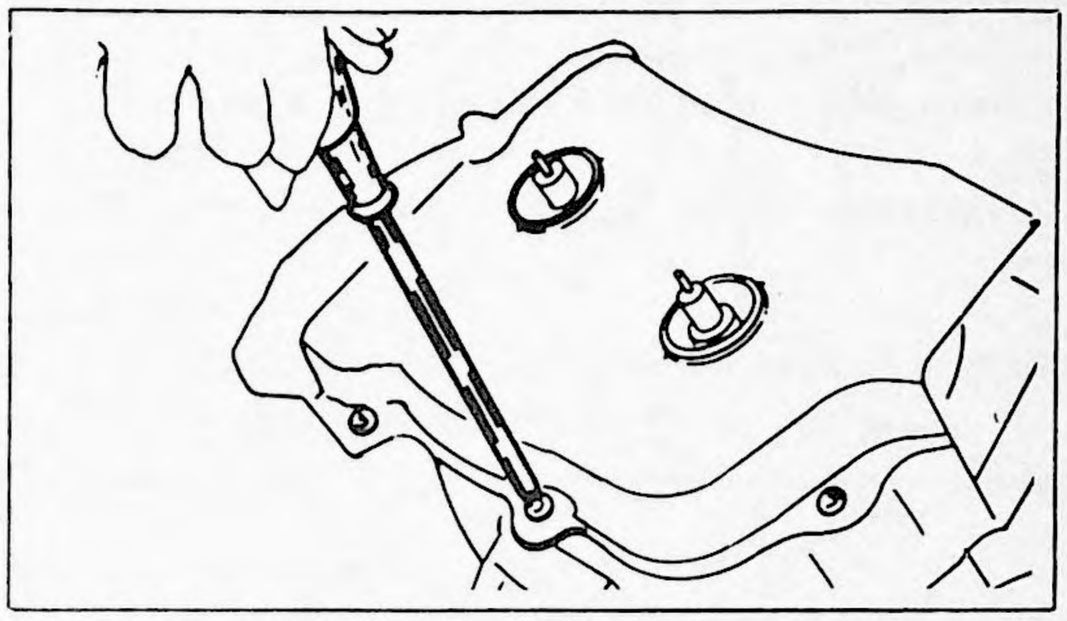

Fig. 2-64

2–6–2

Remove the lower air shroud by taking out the 3 phillips head screws that secure it.

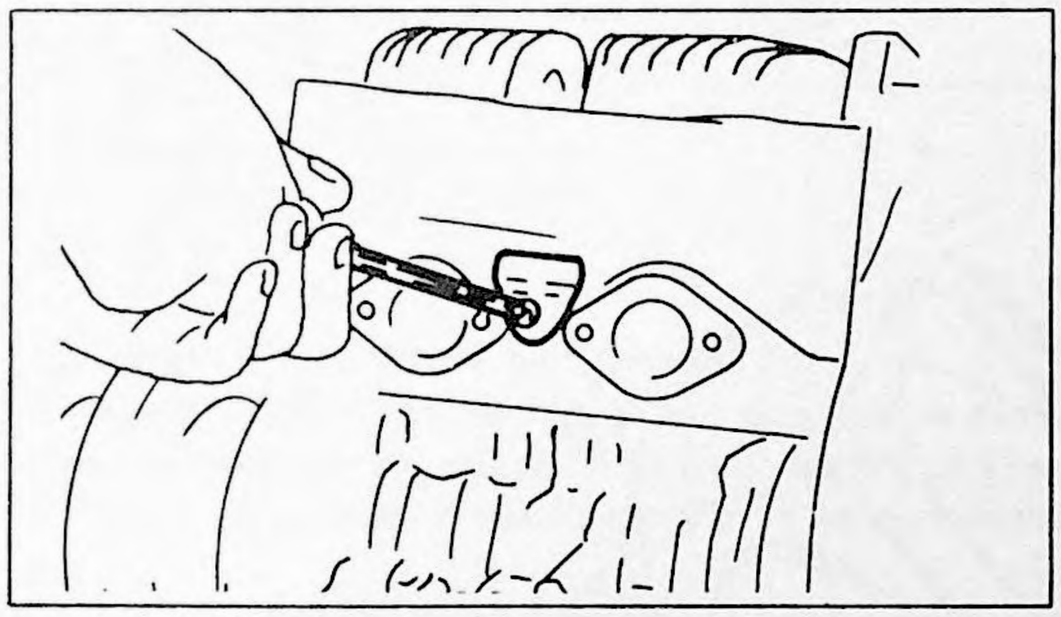

Fig. 2-65

2–6–3

Straighten the bent positions of lock washers 1 and 2, and remove the bolts. The fancases 1 and 2 can be removed out of the crankcase.
(Note that a packing agent gasket is applied to the mating surfaces of the fancases 1 and 2.)

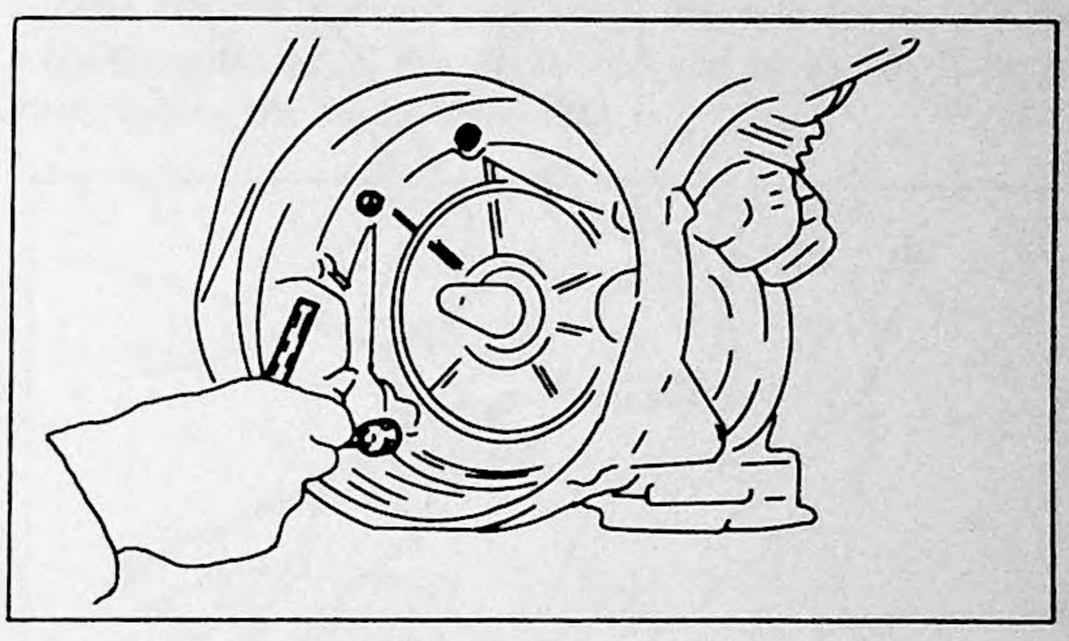

Fig. 2-66

FANCASE & AIR SHROUD

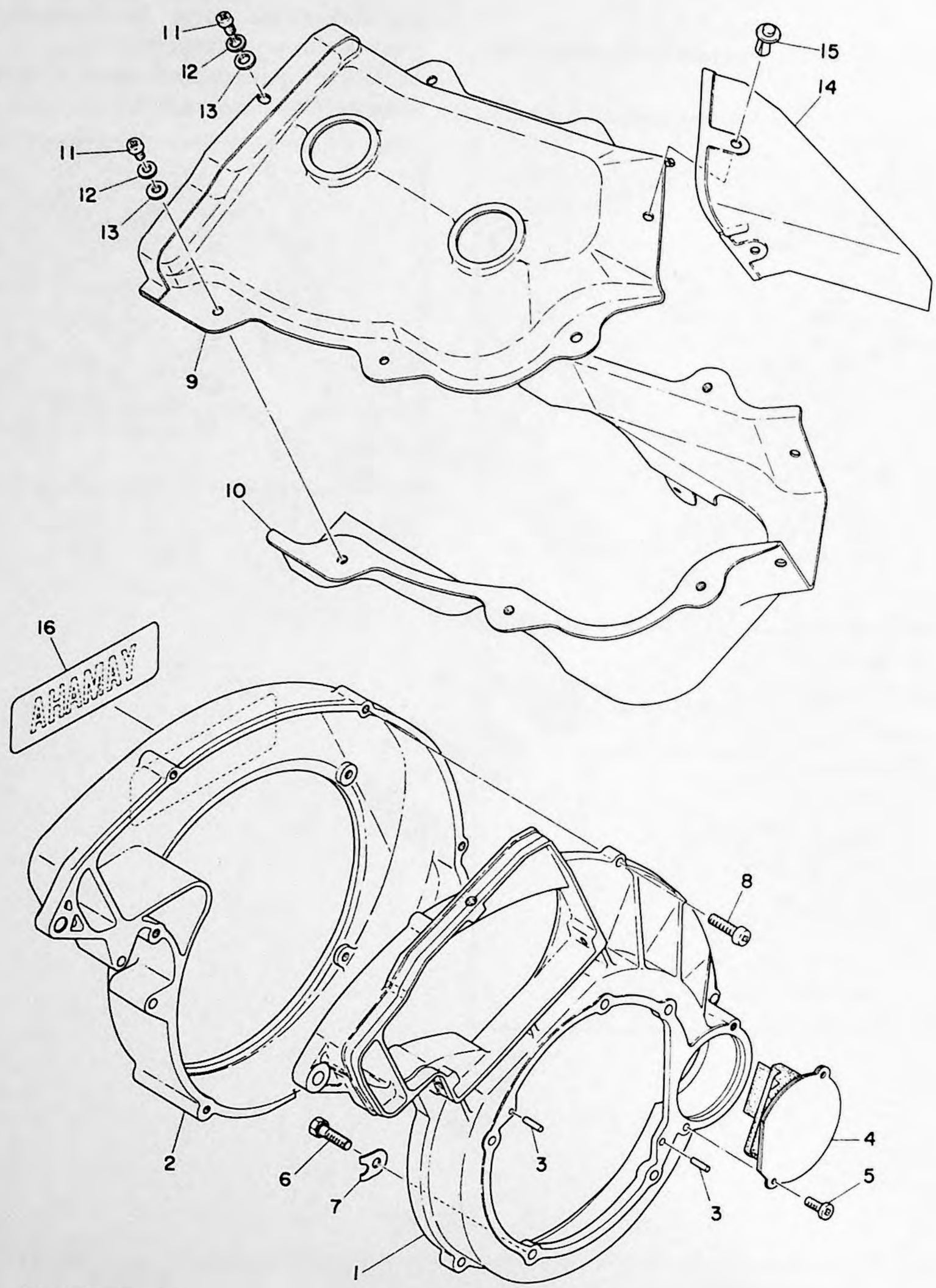

Fig. 2-67

Ref. No.	Description	Q'ty	Ref. No.	Description	Q'ty
1	CASE, fan 1	1	9	AIR SHROUD, cylinder 1	1
2	CASE, fan 2	1	10	AIR SHROUD, cylinder 2	1
3	PIN, dowel B(4-13.8)	2	11	SCREW, panhead	10
4	PLATE	1	12	WASHER, spring	10
5	SCREW, panhead	2	13	WASHER, plain	10
6	BOLT	5	14	DUCT	1
7	WASHER, lock 1	5	15	FASTNER	3
8	SCREW, panhead	6	16	EMBLEM	1

2–7 REMOVAL OF TOP END

Note:

During disassembly keep matching parts together that is right piston with right cylinder, etc.

2–7–1

Remove the cylinder heads. Each head is held down by four nuts.

Break each nut loose, in pattern, before removing completely.

Note:

On reassembly, the head bolts are torqued, gradually and in pattern, to 16.5 ~ 19.5 ft-lbs.

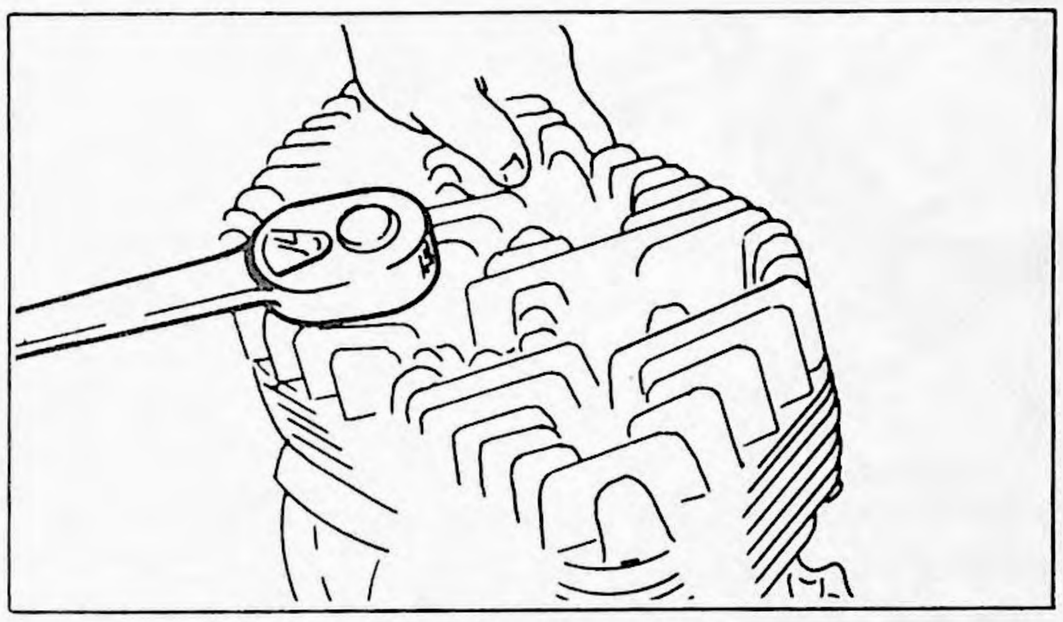

Fig. 2-68

2–7–2

The next step is to remove the cylinders.

When the cylinders are lifted off it is advisable to slip a clean rag beneath the piston. This will stop any carbon, broken parts, or other contaminations from falling into the engine.

Do not use a hammer to drive the pin out.

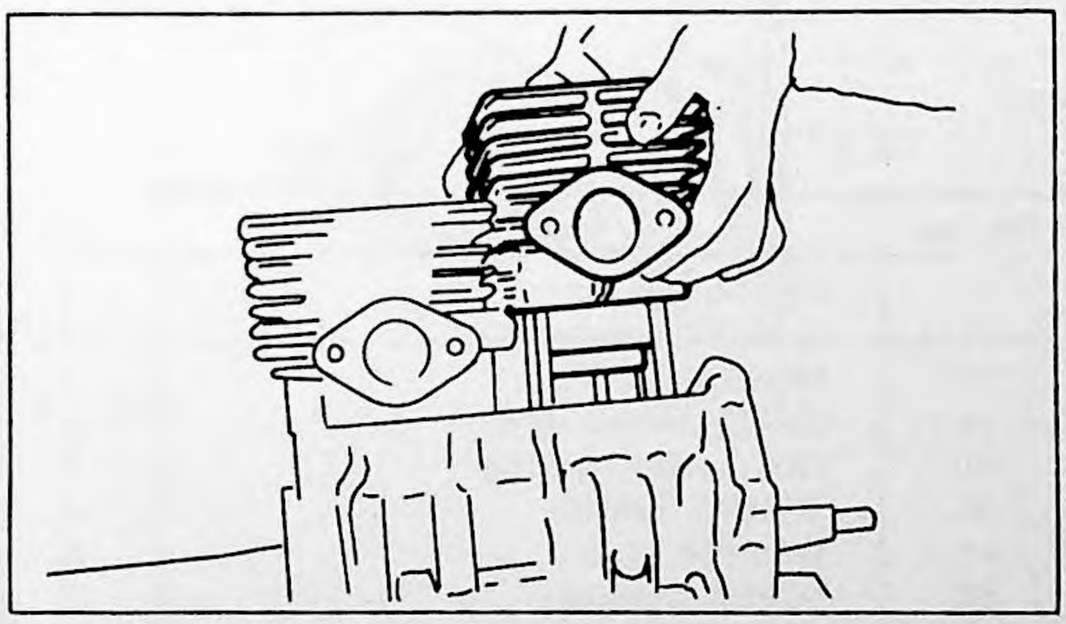

Fig. 2-69

2–7–3

The piston assembly is removed at this time. Use a needle nose pliers to remove the piston pin clip.

Use a soft drift pin to push the piston pin out to allow a pair of pliers to grip and completely remove the piston pin. Once the piston pin has been removed the piston can be lifted off the rod and set aside. Be sure to remove the needle bearings in the upper rod end so as not to loose them when the engine is moved.

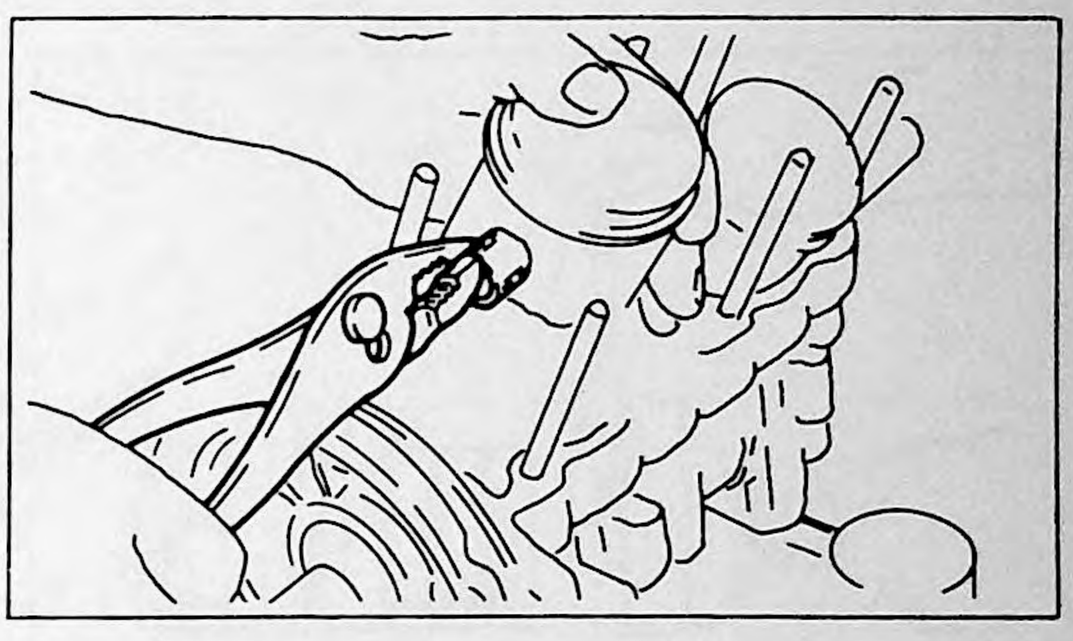

Fig. 2-70

CRANKCASE

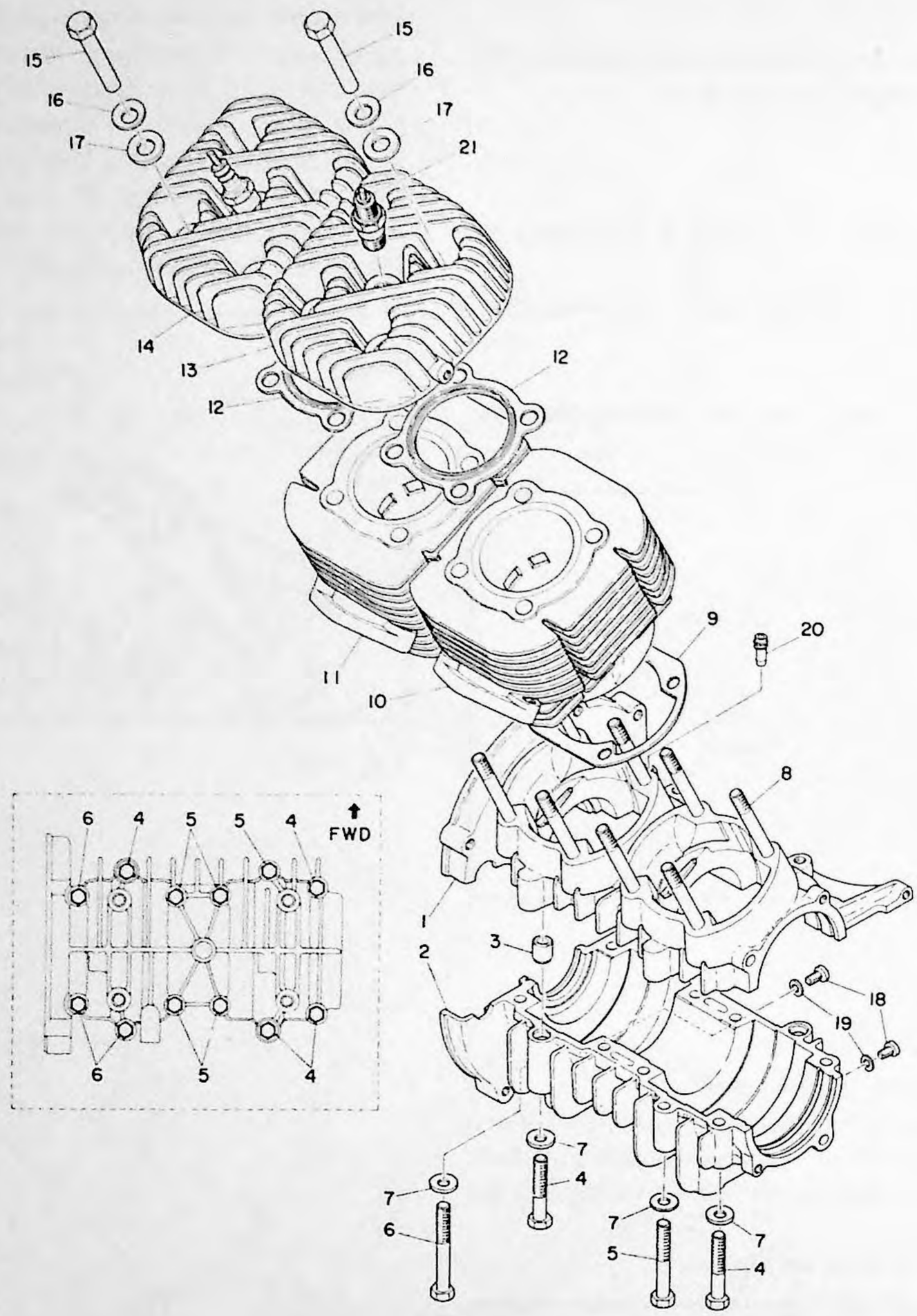

Fig. 2-71

Ref. No.	Description	Q'ty	Ref. No.	Description	Q'ty
0-1	CRANKCASE ASS'Y	1	11	CYLINDER, right	1
1	CASE, crank 1	1	12	GASKET, cylinder left	2
2	CASE, crank 2	1	13	HEAD, cylinder left	1
3	PIN, dowel A (9.8-12-16)	2	14	HEAD, cylinder right	1
4	BOLT	4	15	NUT, cylinder holding	8
5	BOLT	5	16	SPRING, bellevile	8
6	BOLT	3	17	WASHER, plain	8
7	WASHER, plain	12	18	SCREW, panhead	2
8	BOLT, cylinder holding	8	19	GASKET, screw	2
9	GASKET, cylinder	2	20	PIPE, joint	1
10	CYLINDER, left	1	21	PLUG, spark (B-7HS)	2

Reference:

The lower crankcase has two drain screws. These drain screws are used to empty the crankcase before the engine is stored away for a long time. When installing these screws, apply a sealing agent so that they will neither loosen nor leak air.

2–8 TOP END REASSEMBLING CRANKSHAFT ASSEMBLY

2–8–1

This illustration shows the proper sequence for removing the case bolts. This sequence must be followed in order to avoid distortion of the two crankcases.

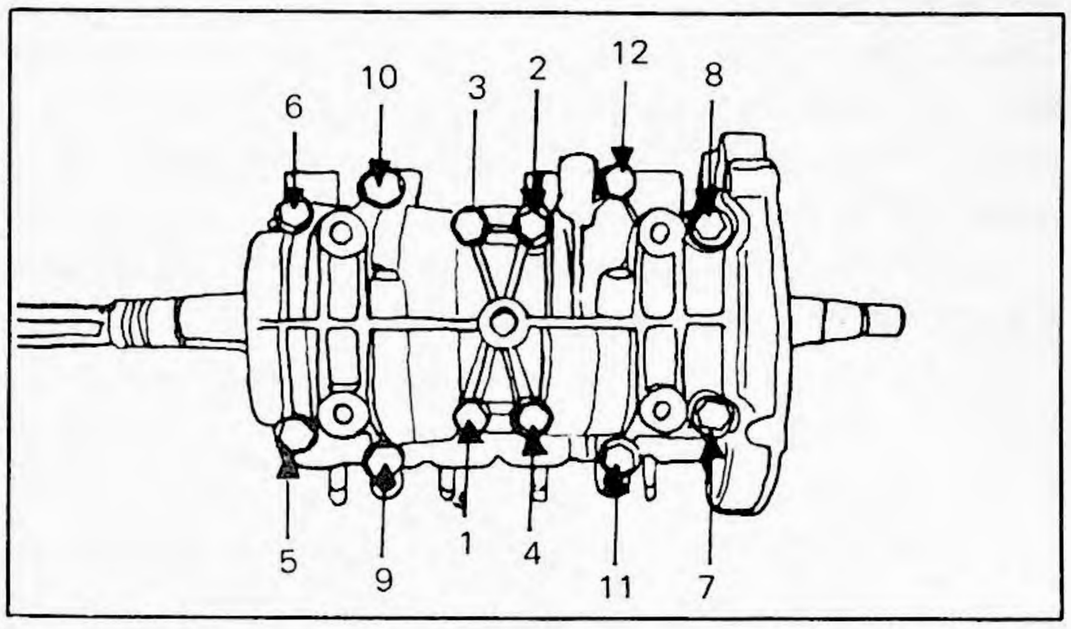

Fig. 2-72

2–8–2

Use a soft hammer to lightly tap around the entire edge of the cases. This will free the cases in the event any adhesion is present. The cases in the event any adhesion is present. The cases can now be split by hand. As is shown in the illustration, the cases have knock pins (locating pins).
Be sure that the five locating pins are immediately gathered up and kept in a safe place so that none are lost before the engine is assembled again.

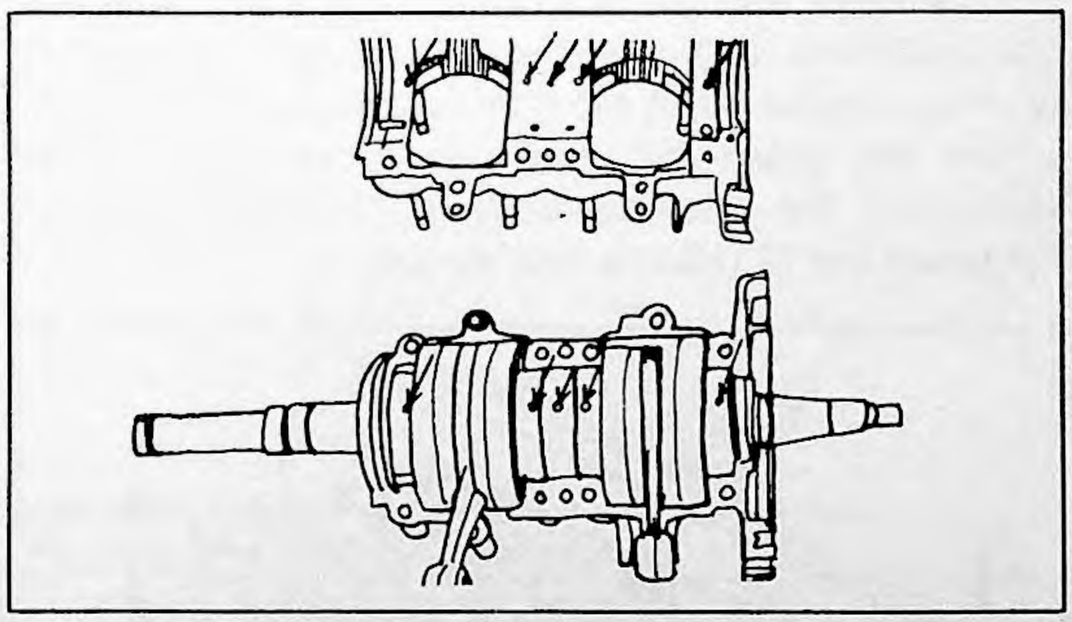

Fig. 2-73

2–8–3

After removal of the crankshaft, wear of the connecting rod big end, crank pin and bearing should be checked.
Excessive wear of the connecting rod big end is checked by measuring the axial play of the connecting rod small end when it is moved from side to side with your fingers. The axial play should not exceed 0.080" (2 mm).
After the crank pin and bearing are replaced, maximum axial play should not exceed 0.032 ~ 0.04" (0.8 ~ 1.0 mm).

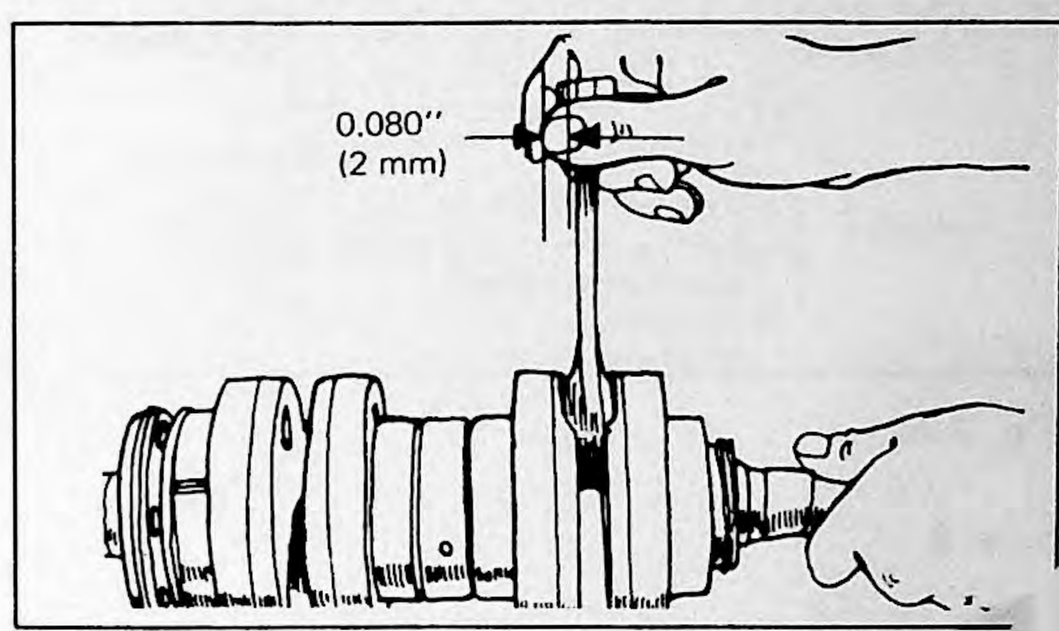

Fig. 2-74

2–8–4

Use a feeler gauge to measure for the correct free play o. 0.010 ~ 0.029" (0.25 ~ 0.75 mm).
Free play should not be confused with axial play. Free play is the clearance between the rod and crank shims.

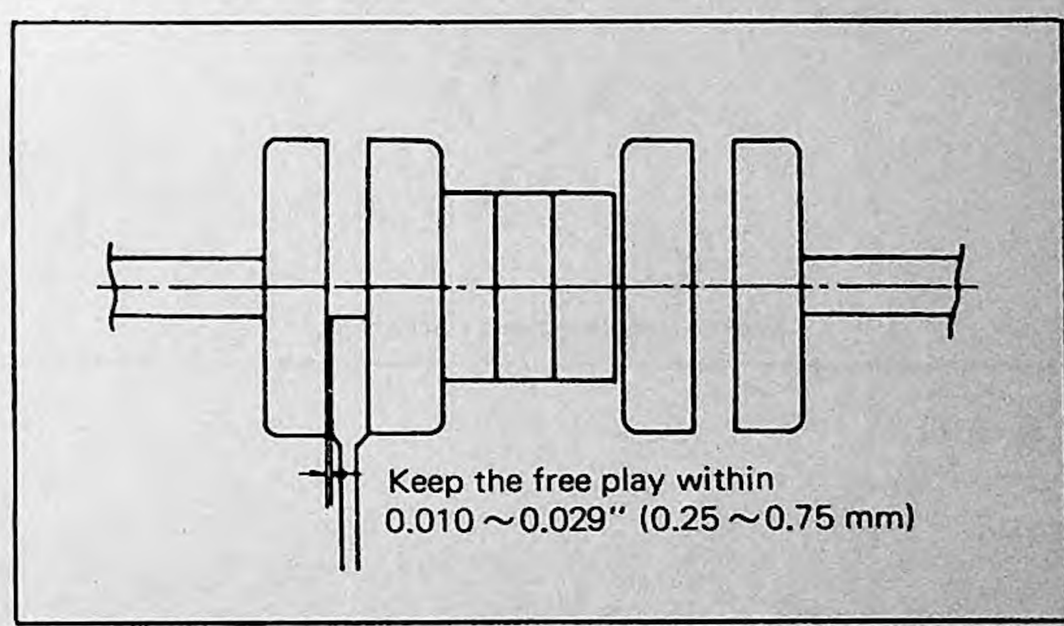

Fig. 2-75

2–8–5

Crankshaft run-out can be checked by placing the crankshaft ends in V-blocks.
By using a dial indicator the deflection of the crankshaft should be measured at the places shown.

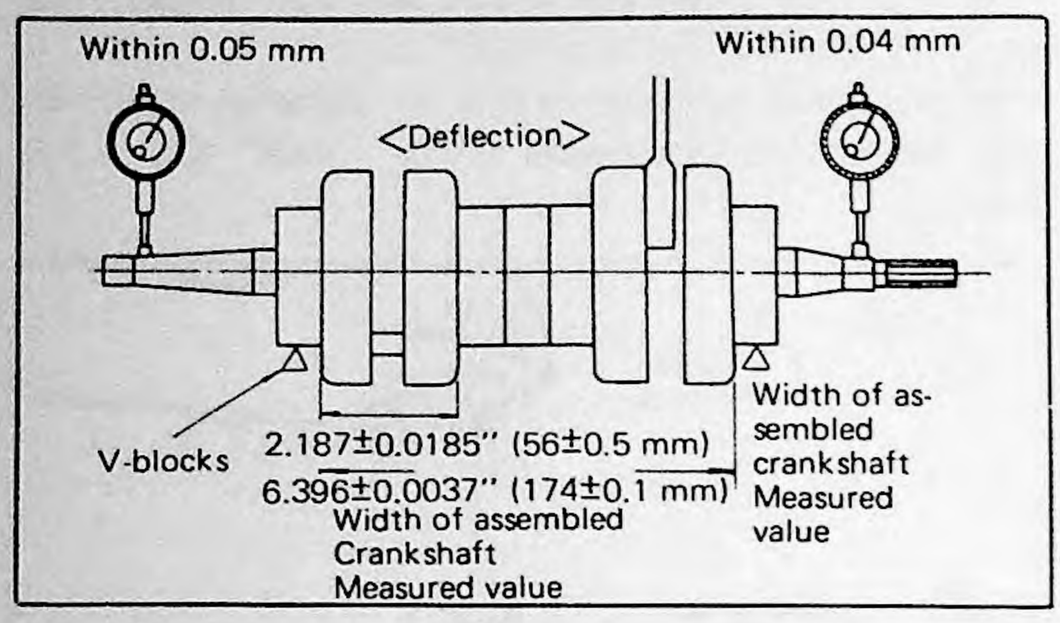

Fig. 2-76

2–8–6

Correction of excessive crankshaft deflection can be accomplished by tapping the flywheel with a brass hammer and/or using wedges placed between the flywheels as shown in the figure.

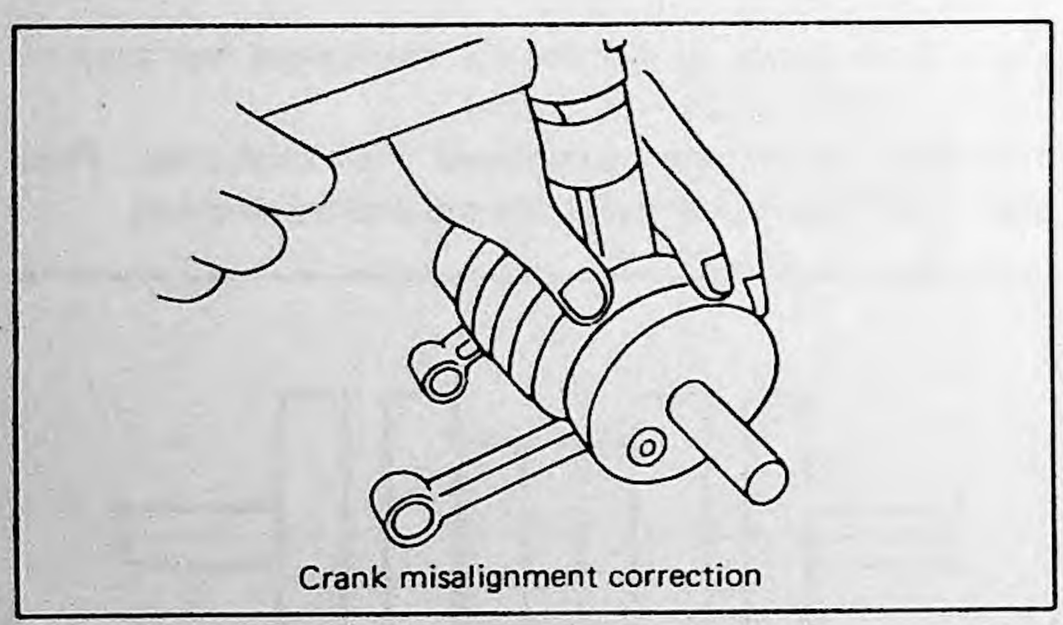

Fig. 2-77

2–8–7

Assembly of the crankshaft in the crankcase should be carefully done. Each of the crankshaft bearings has a lock pin hole in the outer race and two aligning marks offset 90° from the lock pin hole. The aligning marks should be matched with the sealing surface of the upper crankcase half so as to insure correct matching of the knock pin in the knock pin hole.
Should the crankshaft be assembled in the cases with the bearings misaligned, the knock pin will be pushed into the body of the crankcase and the bearing will not be properly secured after the crankcase halves are sealed. This situation is also true for the labyrinth center seal. Damage to both the crankshaft and crankcases can therefore occur.

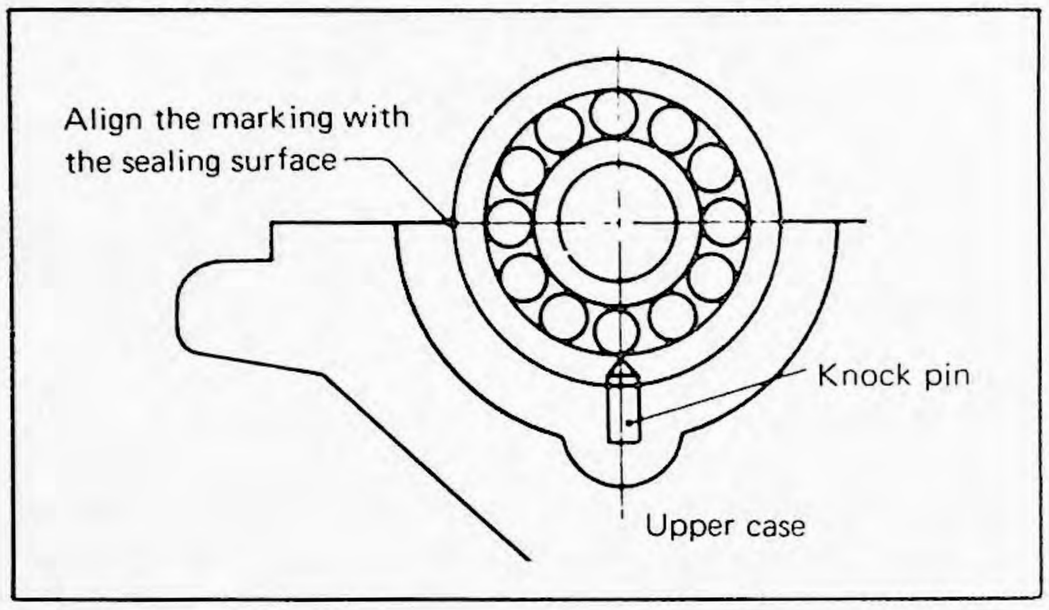

Fig. 2-78

2–8–8

The bottom half of the crankcase can now be fitted over the crankshaft and on to the upper crankcase half. The crankcase bolts can now be placed in the case. Be sure that when you torque down the crankcase bolts, proper torque setting and sequence of tightening is followed. Correct torque for the crankcase bolts is 7.5 ft-lbs for initial tightening and 18 ft-lbs for final torque.

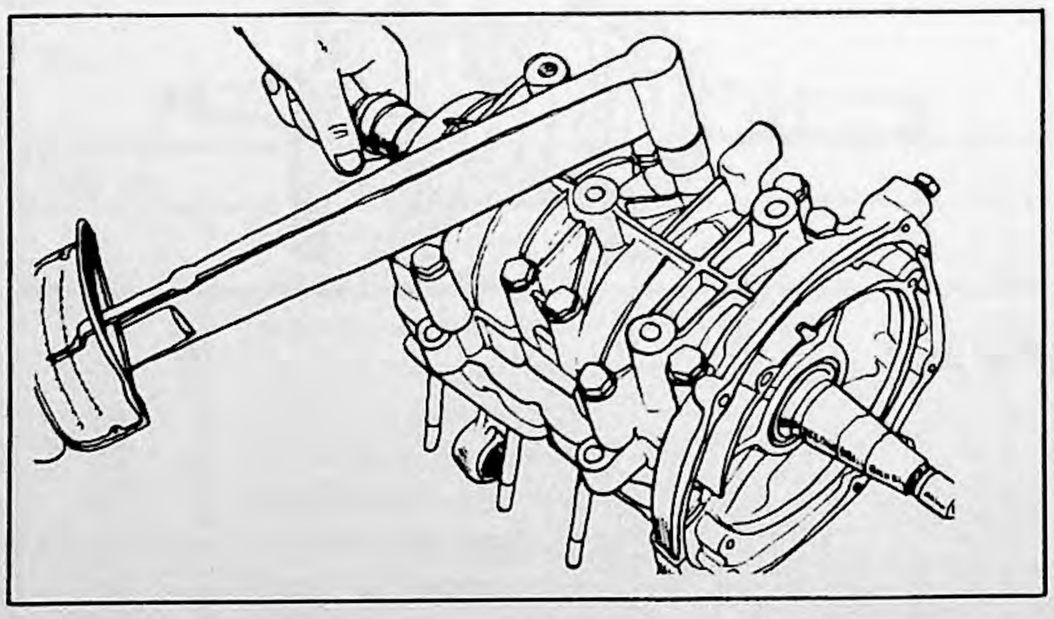

Fig. 2-79

CRANK & PISTON

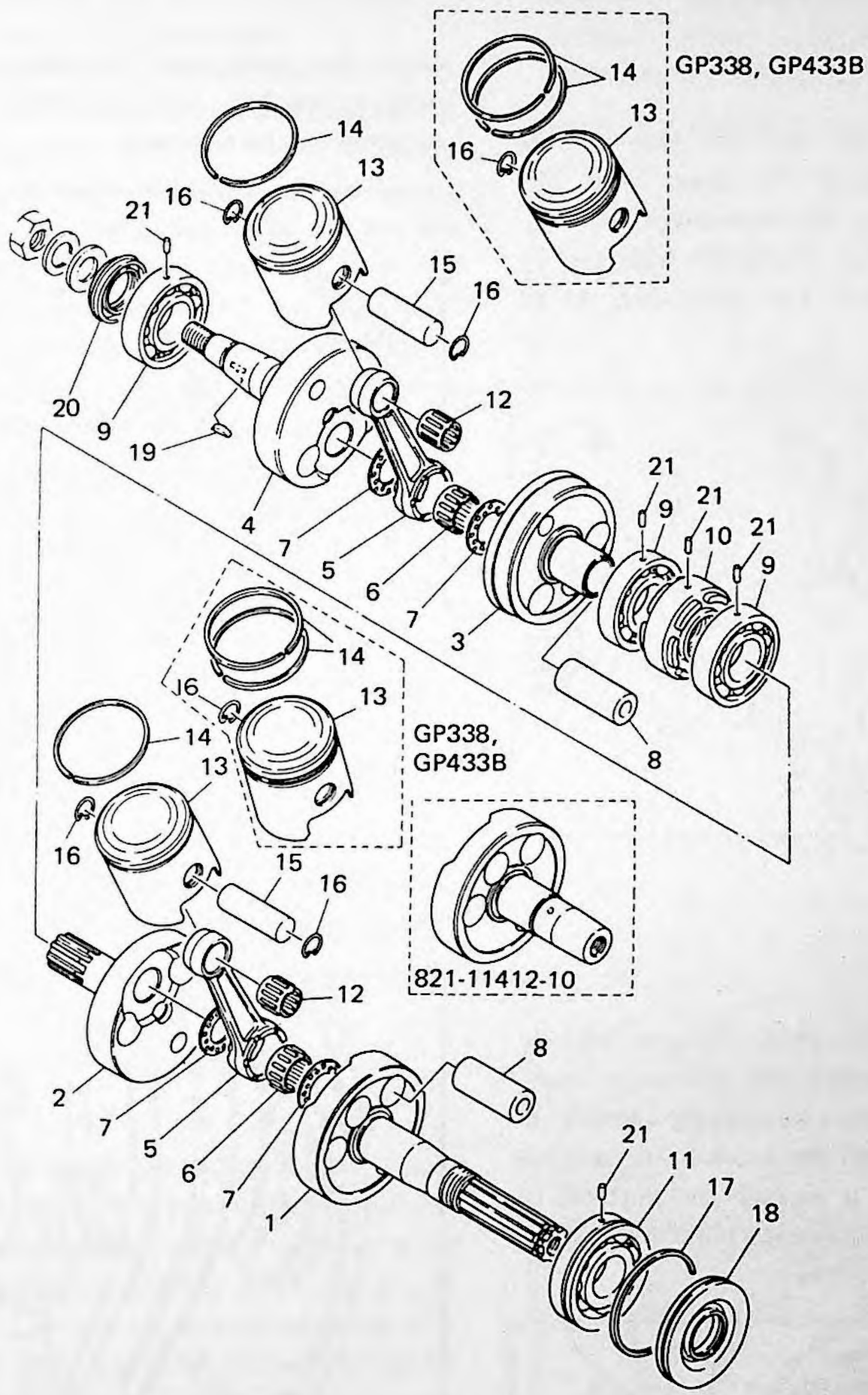

Fig. 2-80

Ref. No.	Description	Q'ty	Ref. No.	Description	Q'ty
0-1	CRANK ASS'Y	1	13	PISTON (59.96 mm STD)	U.R
	CRANK ASS'Y (TAPERED)	1		PISTON (59.98 mm STD)	2
1	CRANK 1, left	1		PISTON (60.25 mm 1st O.S)	2
	CRANK 1, left (TAPERED)	1		PISTON (60.50 mm 2nd O.S)	2
2	CRANK 1, right	1	14	RING, piston (STD)	2
3	CRANK 2, left	1		RING, piston (1st O.S)	2
4	CRANK 2, right	1		RING, piston (2nd O.S)	2
5	ROD, connecting	2	15	PIN, piston	2
6	BEARING, con-rod big end	2	16	CLIP, piston pin	4
7	WASHER, crank pin (24.2-38-1)	4	17	CIRCLIP	1
8	PIN, crank	2	18	OIL SEAL (SW-32-78-10)	1
9	BEARING (B6206C3 special)	3	19	KEY, woodruff	1
10	SEAL, labyrinth	1	20	OIL SEAL (SW-32-48-10)	1
11	BEARING (B6306C3 special)	1	21	PIN, dowel (4-12)	5
12	BEARING, con-rod small end	2			

CHAPTER 3. POWER TRAIN

3–1 DISC BRAKES AND SECONDARY SHEAVES

3–1–1

The brake pads are located on the left side of the snowmobile and on the outisde of the chain case. The brake pads are removed by pulling the single pivot pin.
Once this pin has been removed, the brake pads can be pulled out of the way to allow the brake disc to be removed.

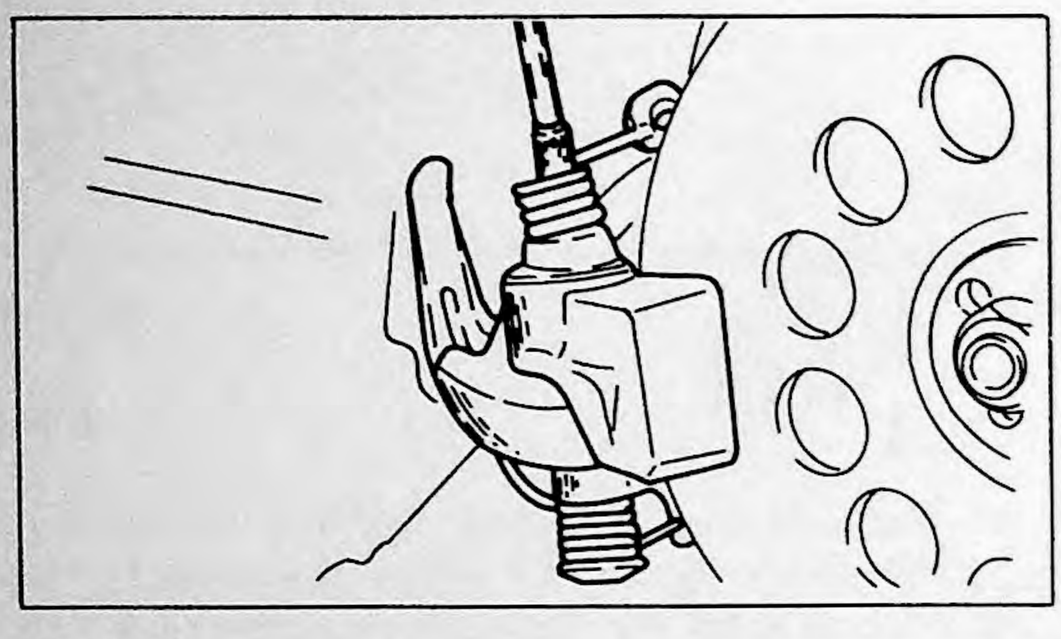

Fig. 3-1

3–1–2

The brake disc is removed at this time. This is done by removing the nut and spring washer, the brake disc itself, and on some machines the shims immediately behind it. You will notice in the picture that the shims are situated in front of the brake disc. This is merely for purpose of identification, as they actually are located behind the brake disc.

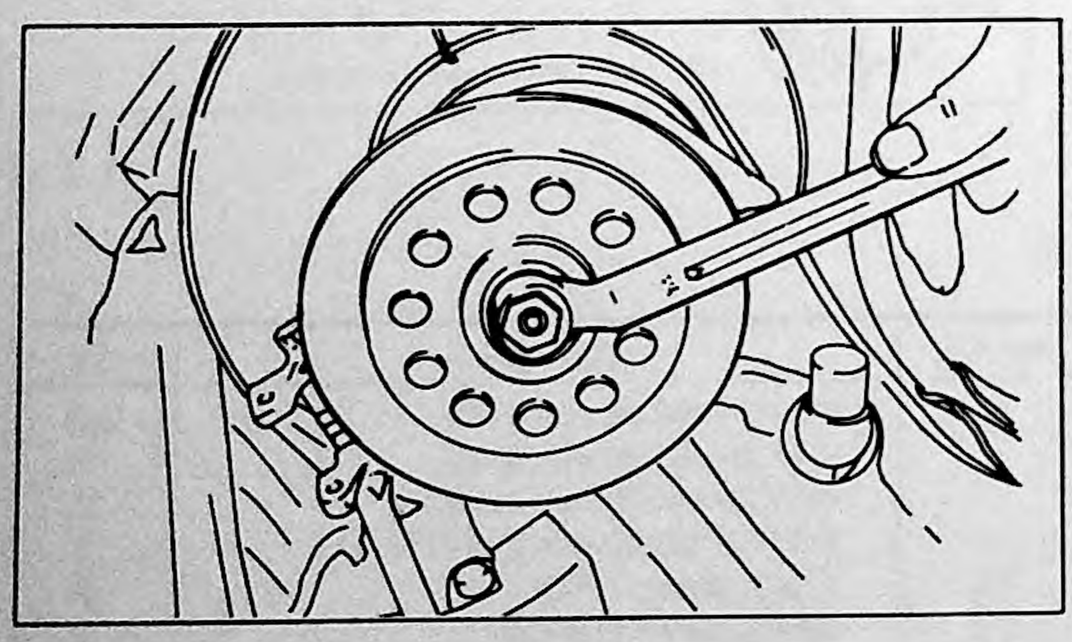

Fig. 3-2

3–1–3

Once the brake disc has been removed, the two bolts holding the left- and right-hand secondary shaft housing together can be removed.

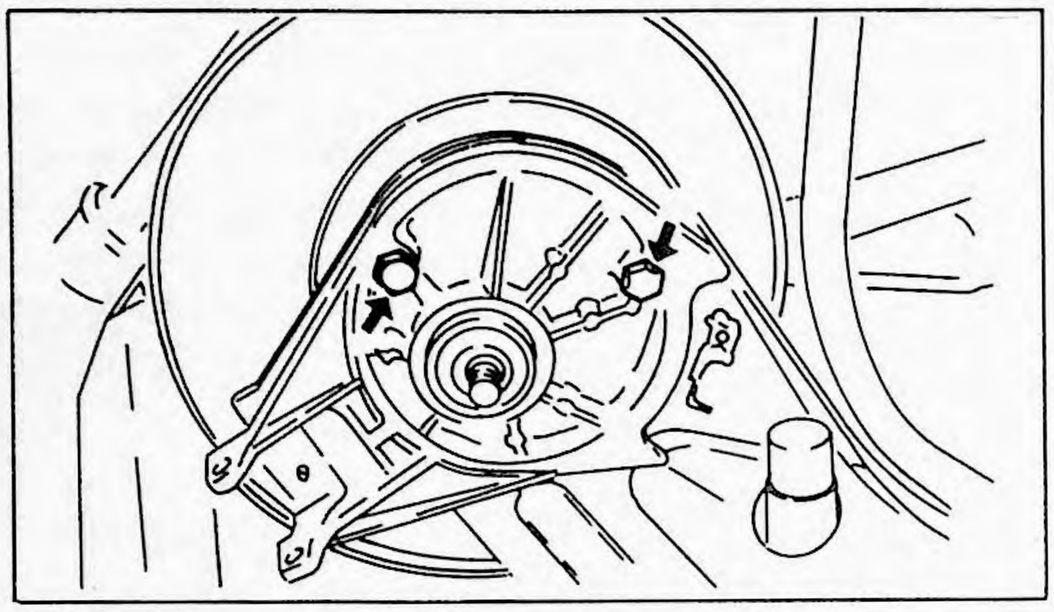

Fig. 3-3

3–1–4

With the two bolts removed, the left-hand secondary shaft housing can be taken off. The housing can be pried off using one screwdriver on each side.

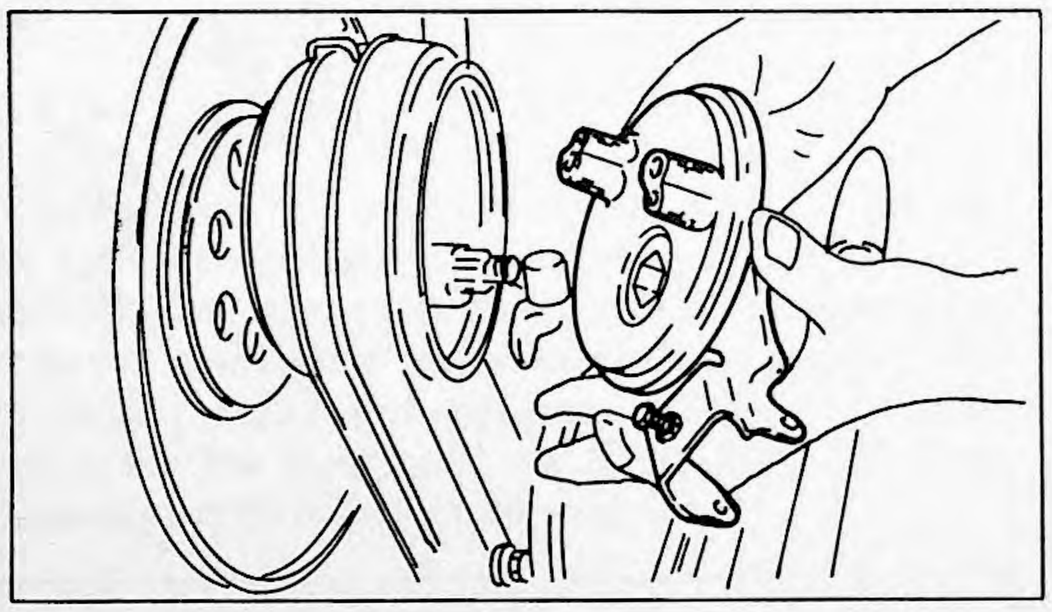

Fig. 3-4

3–1–5

You are now ready to remove the right-hand secondary shaft housing. Use a hammer and soft punch to tap the right-hand housing back out of the chain case.
After the housing is forced back, you will have to slip the chain and drive sprocket off the end of the shaft in order to completely remove the housing.
Once the housing has been tapped loose, then the housing and secondary sheaves can be removed as a complete assembly. The gear can be separated from the chain and placed with the assembly just removed. Care should be taken to avoid dropping the drive shaft spacers and shim into the chain case. If a machine has secondary shaft shims (some do not) they should be reinstalled in their original positions.

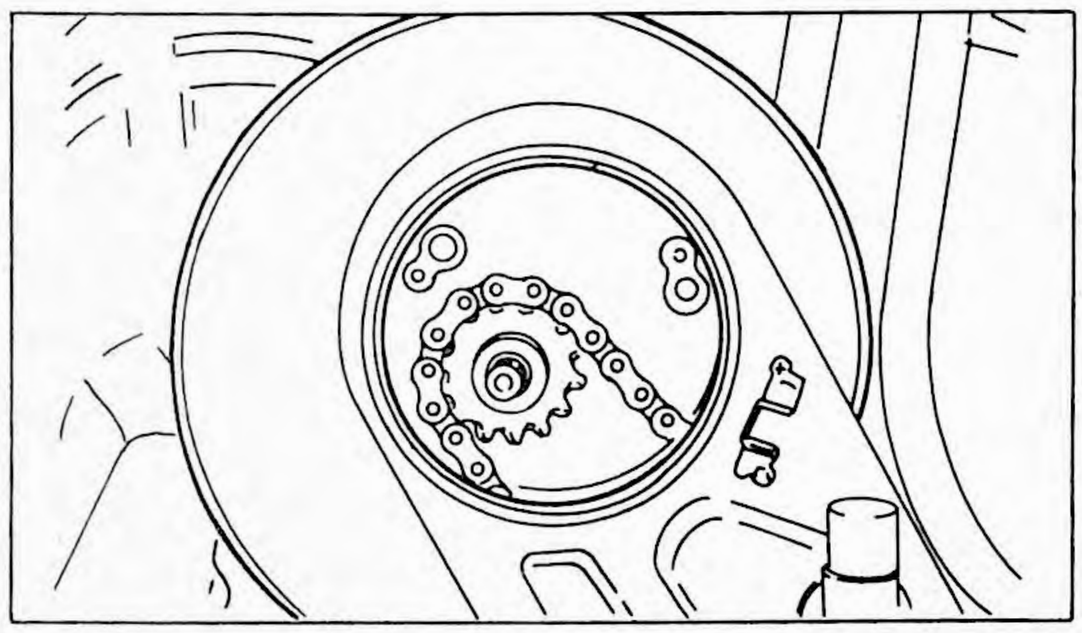

Fig. 3-5

3–1–6

This illustration shows the entire secondary sheave assembly removed and assembled on the bench. Normally this should be the extent of disassembly, but if a problem arises in the secondary sheaves themselves, then additional breakdown will be required. This will be accomplished by first removing the roll pin at the right-hand end of the shaft. The spring seat will slip off the end of the shaft once the roll pin has been removed. The spring will also slide off since it is held in place only by the spring seat. This would complete the final disassembly of the secondary sheave assembly.

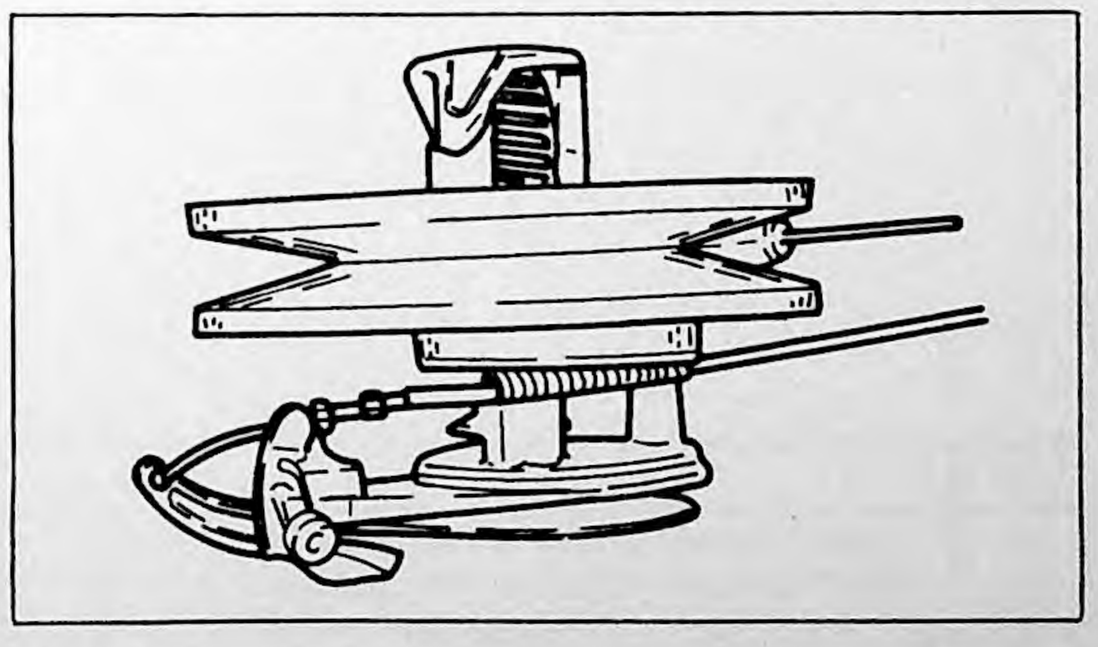

Fig. 3-6

To install the secondary sliding sheave on the secondary shaft, first hook one end of the secondary spring on the sliding sheave, and hook the other end on the spring set. Then turn the spring seat 2 turns (equivalent to 2 pitches of the sliding sheave screw threads), and insert the roll pin into the spring seat to secure it to the secondary shaft.

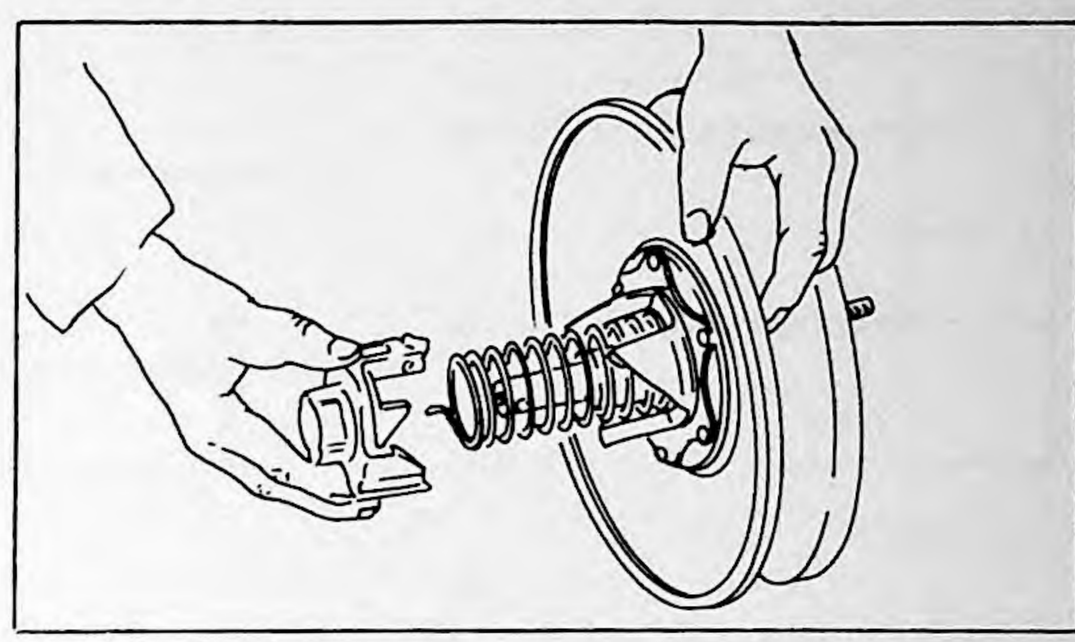

Fig. 3-7

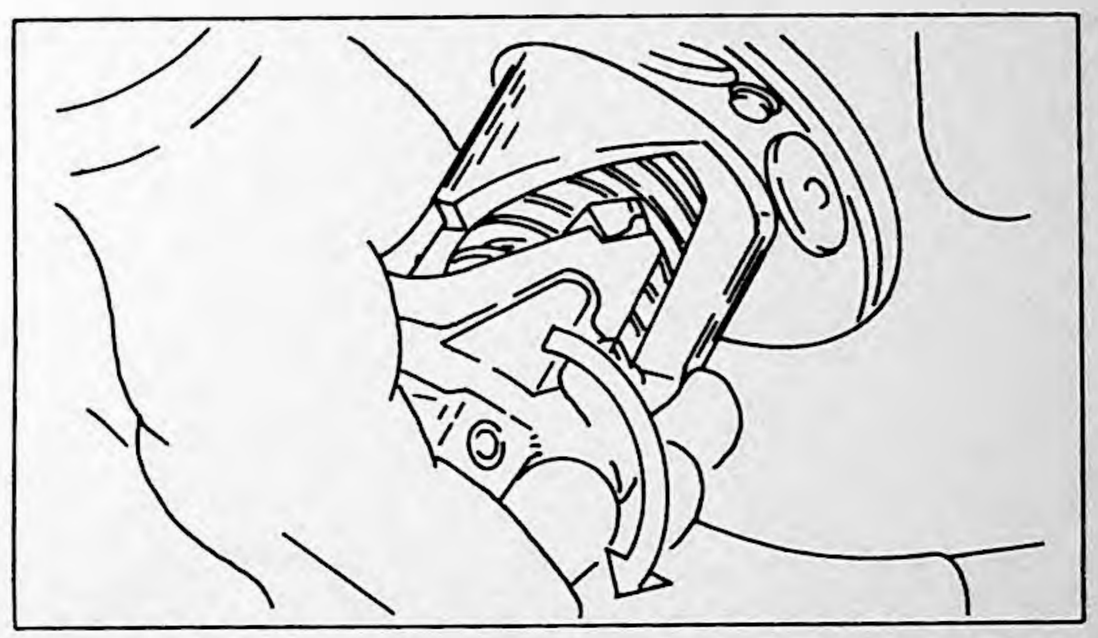

Fig. 3-8

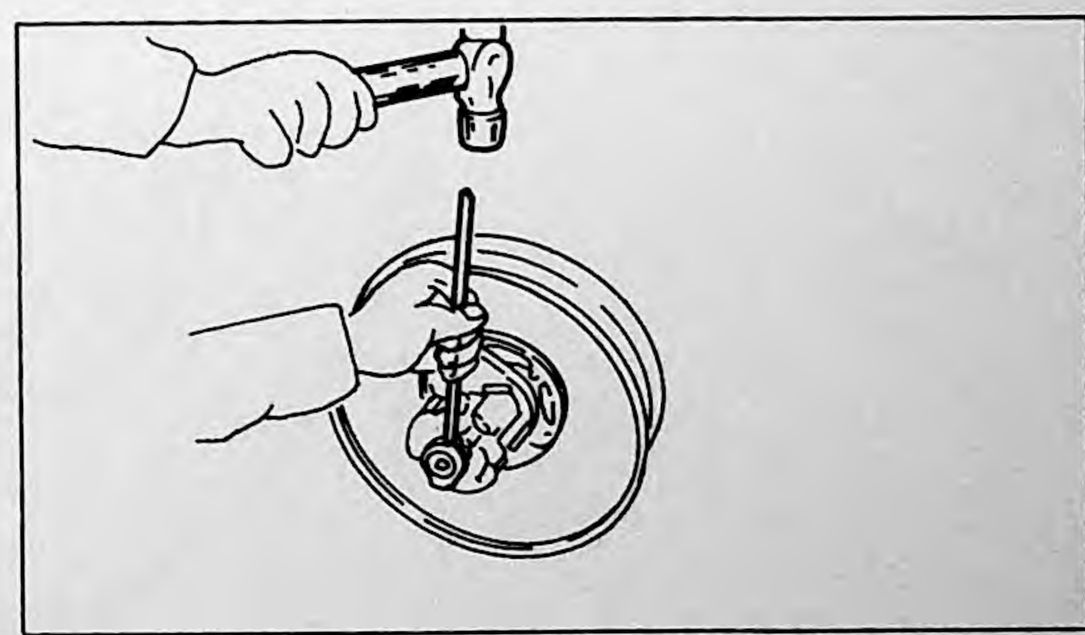

Fig. 3-9

When installing the secondary sliding sheave, feed the shell alvania grease (#2 or #3) between the sheave and the secondary shaft.

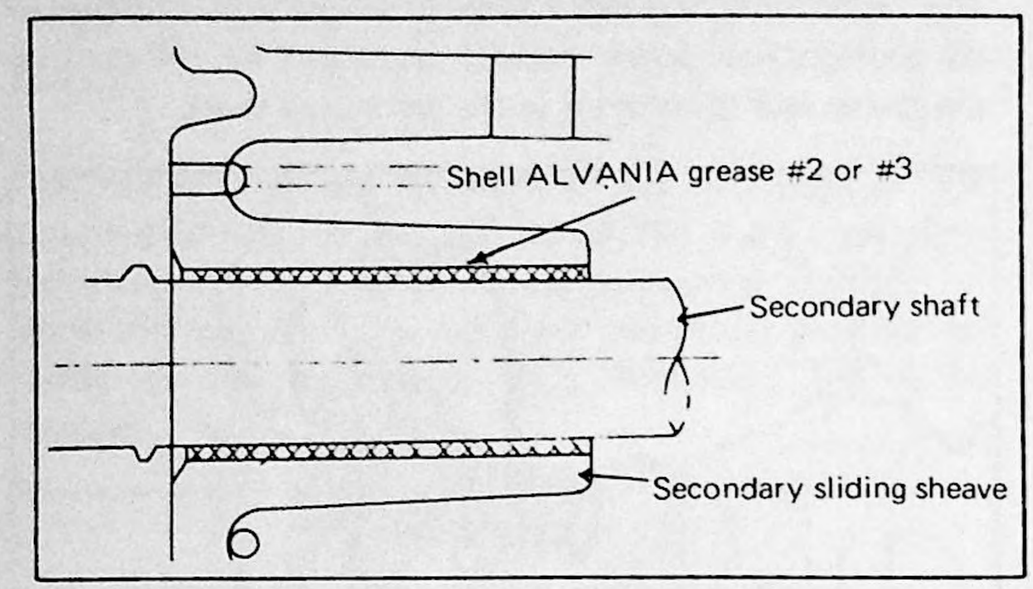

Fig. 3-10

SECONDARY SHEAVE

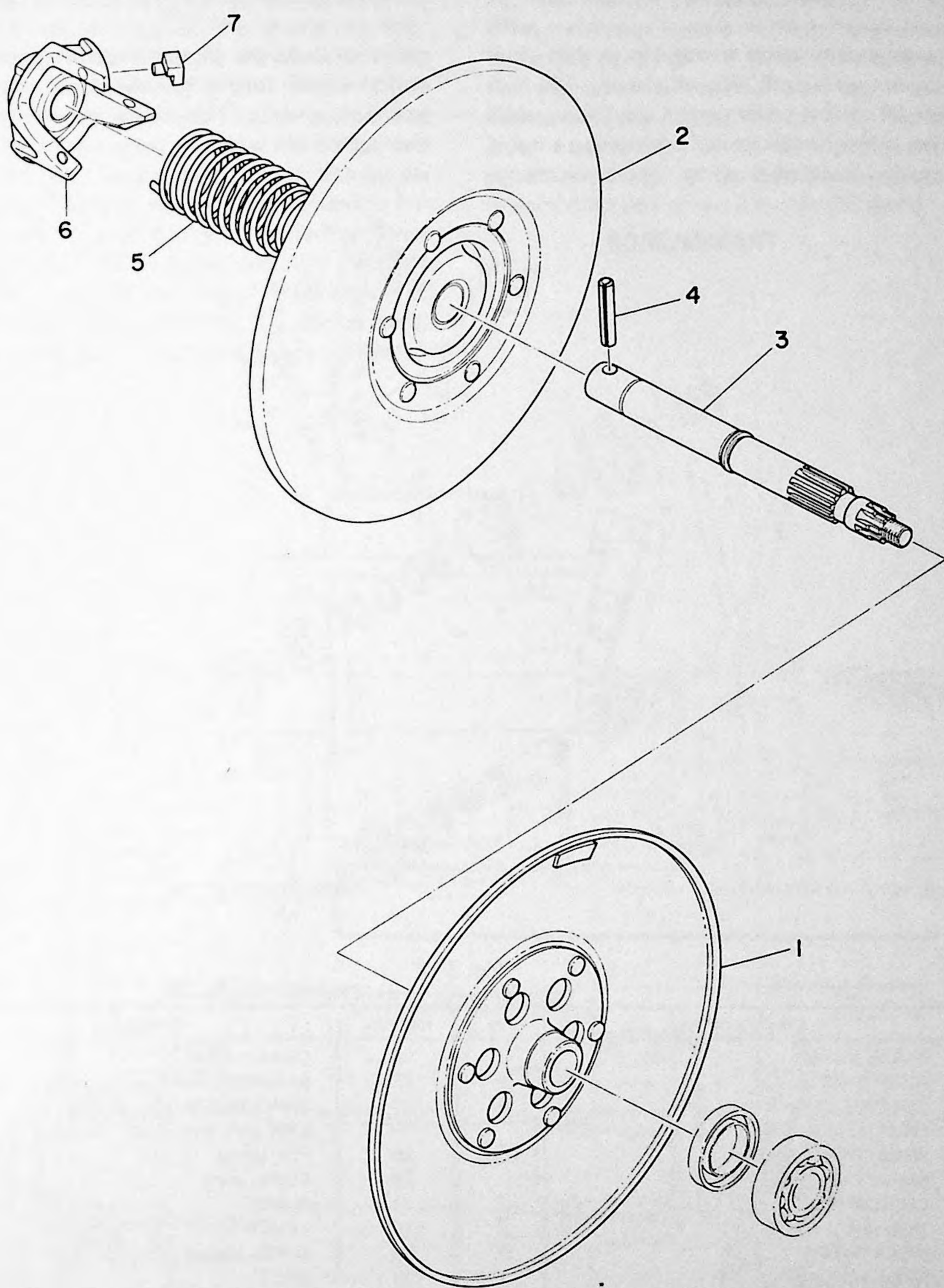

Fig. 3-11

Ref. No.	Description	Q'ty	Ref. No.	Description	Q'ty
1	SECONDARY FIXED SHEAVE COMP.	1	5	SPRING, secondary	1
2	SECONDARY SLIDING SHEAVE COMP.	1	6	SEAT, spring	1
3	SHAFT, secondary	1	7	SHOE, lamp	3
4	PIN, spring	1			

3–2 QUICK CHANGE EL433B, SW433C, GP433B, EW433C

3–2–1

The quick change system makes it possible to shift from high to low or vice versa with high efficiency. The high position is ideal for driving under normal conditions, while the low position is designed particularly for towing a trailer and traffic requiring frequent stopping. The quick change system protects the drive belt against extreme tension and carries engine torque quickly from primary sheave to secondary sheave. This keeps the drive belt free from slipping and fast wear.

TRANSMISSION

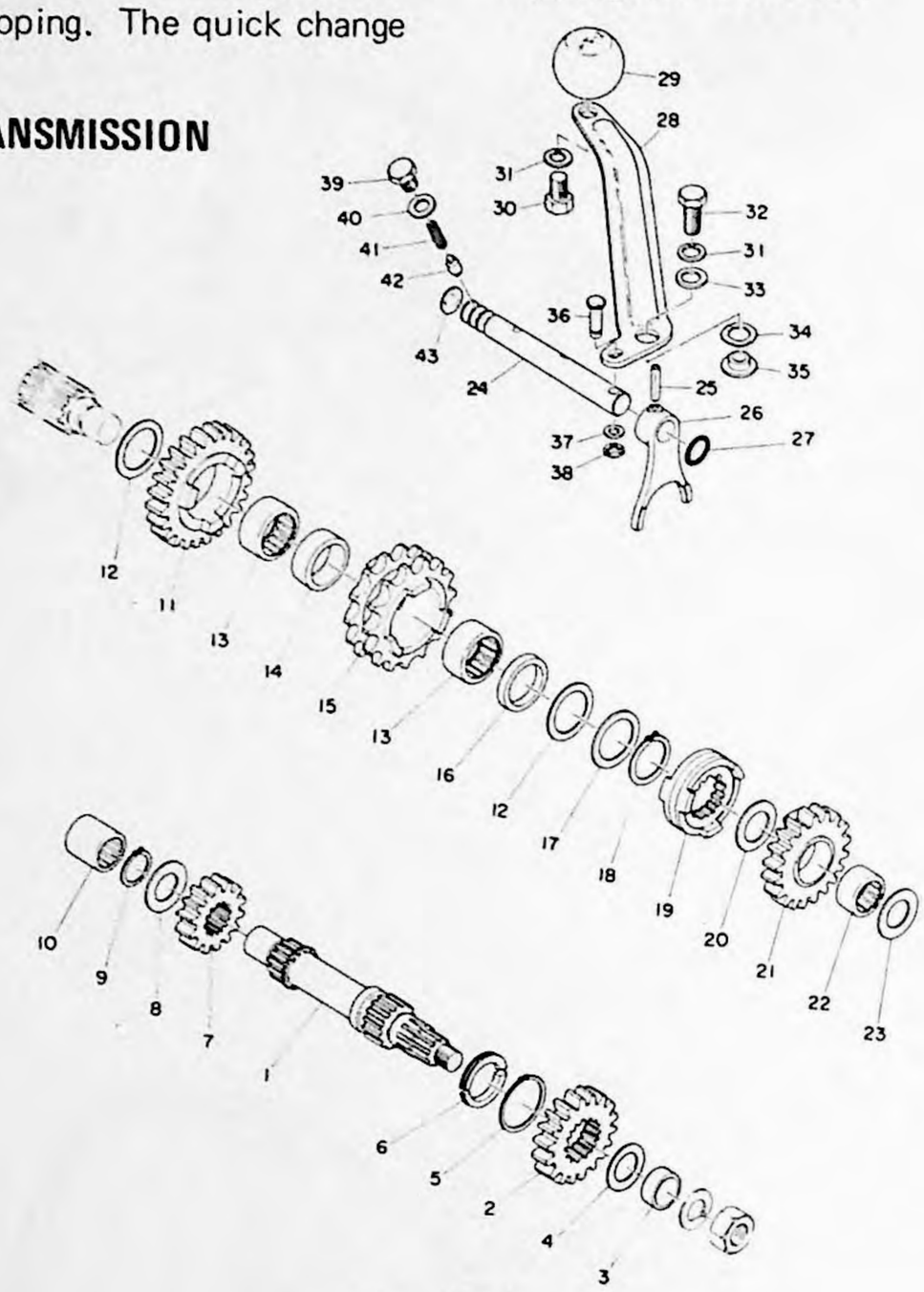

Fig. 3-12

Ref. No.	Description	Q'ty	Ref. No.	Description	Q'ty
1	AXLE, counter	1	21	GEAR 1 (19T)	1
2	GEAR 2 (18T)	1	22	BEARING, needle	1
3	COLLAR, distance 2	1	23	SHIM (17.2-28-0.9)	1
4	SHIM (17.2-25-0.2)		24	BAR, shift fork guide	1
	SHIM (17.2-25-0.3)	U.R	25	PIN, spring	1
	SHIM (17.2-25-0.5)		26	FORK, shaft	1
5	CIRCLIP (S-32)	1	27	O-RING	1
6	COLLAR	2	28	LEVER	1
7	GEAR 3 (14T)	1	29	KNOB, change	1
8	SHIM 4 (15.2-28-2)	1	30	BOLT	1
9	CIRCLIP (S-15)	1	31	WASHER, spring	2
10	BEARING	1	32	BOLT	1
11	GEAR 4 (24T)	1	33	SPACER (8-15-1.5)	1
12	SHIM 5 (24.2-32-0.9)	2	34	WASHER, wave	1
13	BEARING, needle	2	35	SPACER	1
14	COLLAR 2	1	36	PIN, lever	1
15	SPROCKET, chain drive (14T)	U.R	37	WASHER, plain	1
	SPROCKET, chain drive (15T)	1	38	CIRCLIP (E-5)	1
16	COLLAR 1	1	39	BOLT	1
17	SHIM 3 (24.2-32-2)	1	40	GASKET	1
18	CIRCLIP (S-24)	1	41	SPRING	1
19	DOG CLUTCH	1	42	PIN, shift	1
20	SHIM 2 (18.2-28-2)	1	43	PLUG	1

3–2–2 Construction

Shifting from high to low or vice versa is made by operating the change knob on the top of the change housing. Operating the change knob makes the shift fork guide bar to move sideways. As shown in Fig. 3-13, the shift fork guide bar has three notches determining the positions of high (notch on the left), neutral (notch at the center) and low (notch on the right), and it is held in position by the shift pin forced by a spring. As the shift fork guide bar moves, the shift fork attached to the shift guide bar moves sideways the dog clutch splined to the secondary shaft. As the change knob is shifted to "High," the dog clutch meshes with the drive chain sprocket. On the contrary, when the change knob is in "Low," the dog clutch meshes with gear 1.

3–2–3 Power Transmission

A. High Position (In case of SW433C)

When the change knob is in "High," engine power is carried to the dog clutch splined to the secondary shaft, and then the dog clutch causes the drive chain sprocket (which meshes with the dog clutch) to turn. That is, the engine speed is not reduced by the quick change but is reduced as a gear ratio of 25 : 14 from drive chain sprocket (14 teeth) to track drive axle driven sprocket (25 teeth).

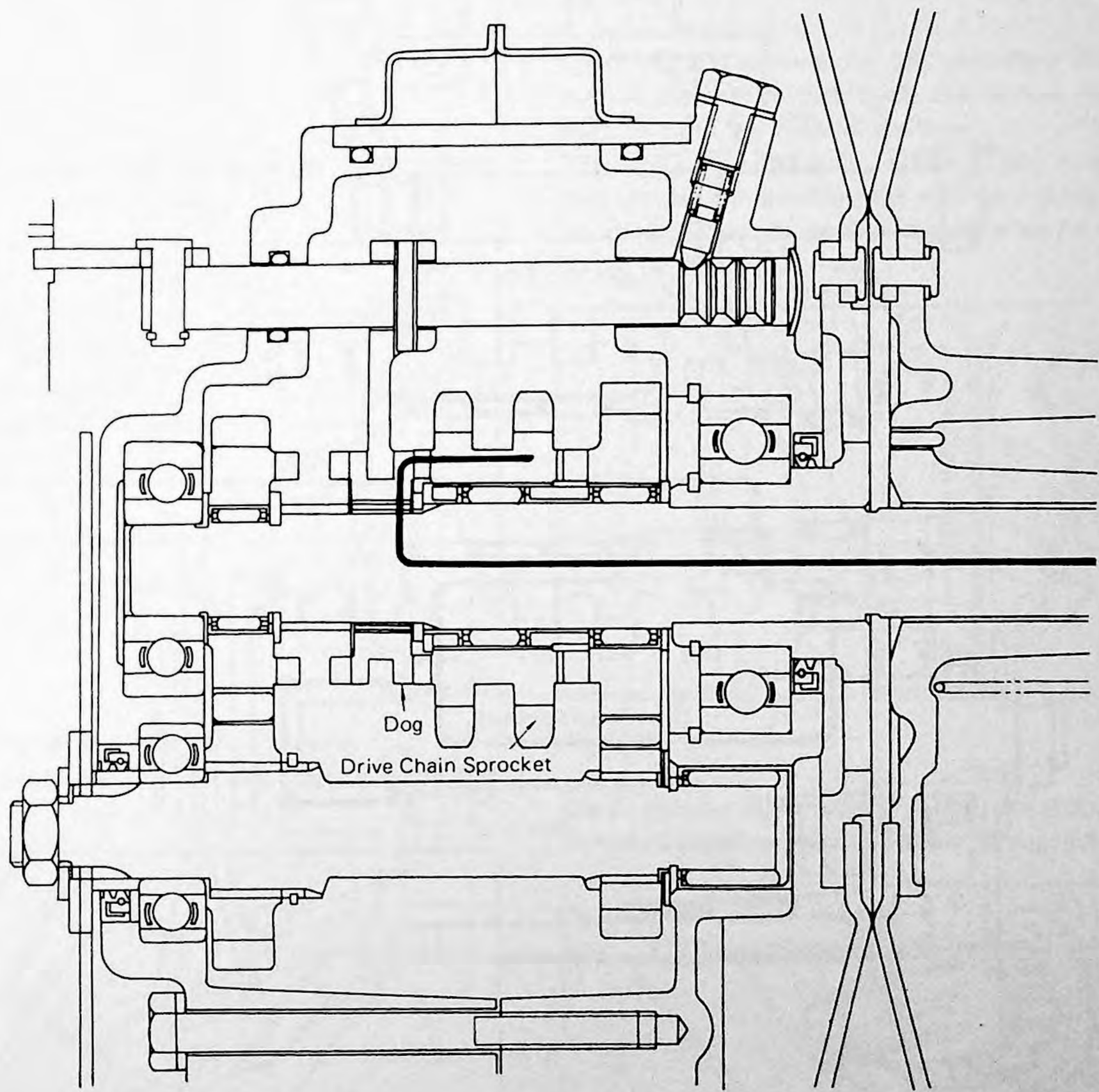

Fig. 3-13

B. Low Position (In case of SW433C)

With the change knob in "Low," the dog clutch splined to the secondary shaft is meshed with gear 1, thereby turning the gear. As the gear turns, it turns gear 2 splined to the counter axle on it right end, by which the counter axle is turned. Gear 3 splined to the left and of the counter axle is meshed with gear 4, which is designed to turn free around the secondary shaft. Therefore, as gear 3 begins to turn, gear 4 is caused to turn. Through gear 4, engine power is carried to the drive chain sprocket.

That is, the engine speed is increased from gear 1 (19 teeth) to gear 2 (18 teeth) and then reduced from gear 3 (14 teeth) to gear 4 (24 teeth). Accordingly, the gear ratio of the secondary transmission is:

$$\frac{18 \text{ (gear 2)} \times 24 \text{ (gear 4)}}{19 \text{ (gear 1)} \times 14 \text{ (gear 3)}}$$

After reduced by the quick change the engine RPM is further reduced from drive chain sprocket (14 teeth) to driven sprocket (25 teeth) at a gear ratio of 25 : 14, in the same manner as in the case of "High." Accordingly, the total reduction ratio is:

$\frac{18 \times 24}{19 \times 14}$ (quick change) x 25/14 (Drive chain sprocket → Driven sprocket) = 2.875.

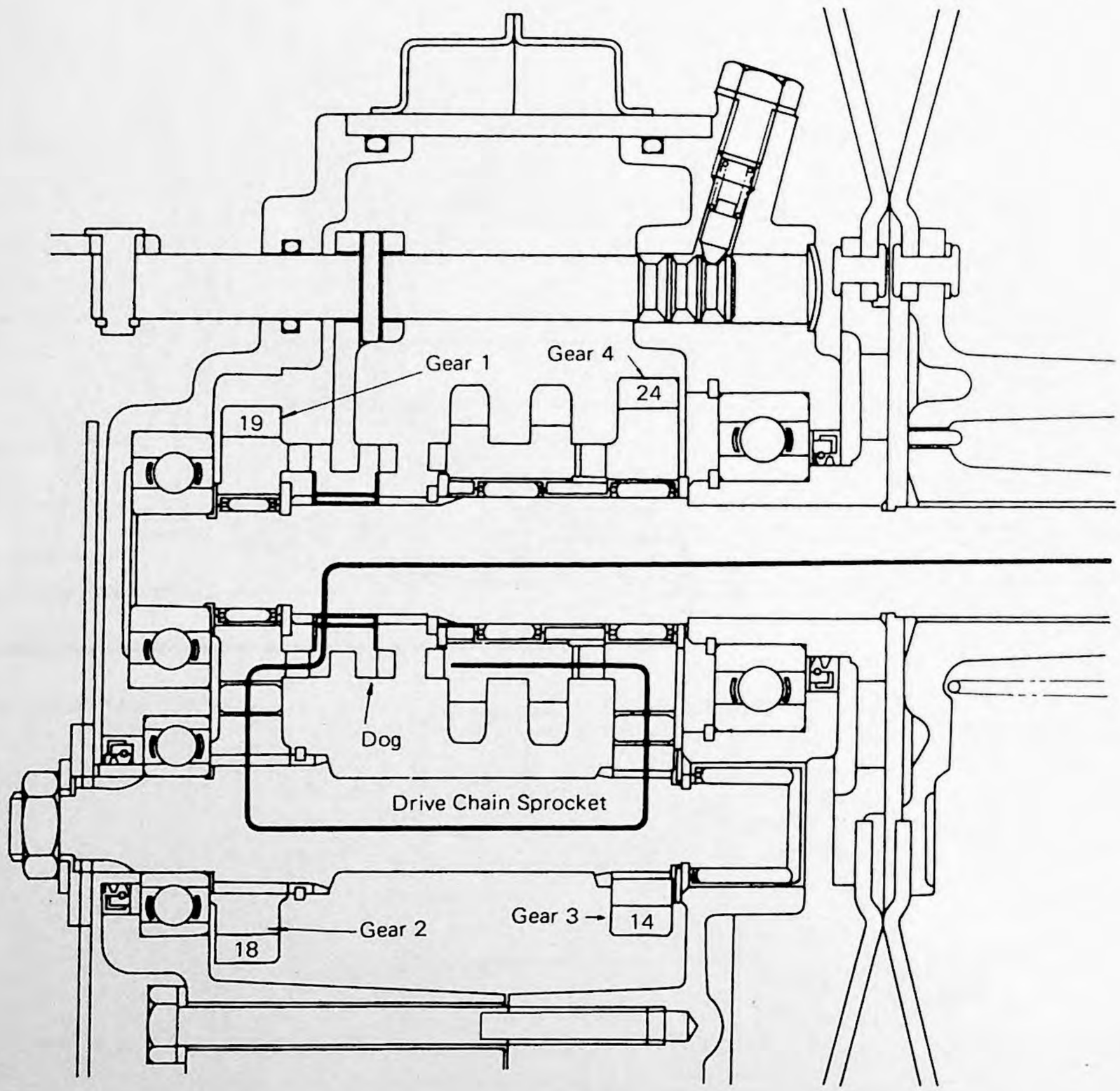

Fig. 3-14

C. Disassembling the Secondary Sheave equipped with the Quick Change System

C-4-1 Remove the brake in the same manner as in the case of the SL433B. The brake discs can be removed without being removed from the brake caliper.

C-4-2 Remove the change knob.

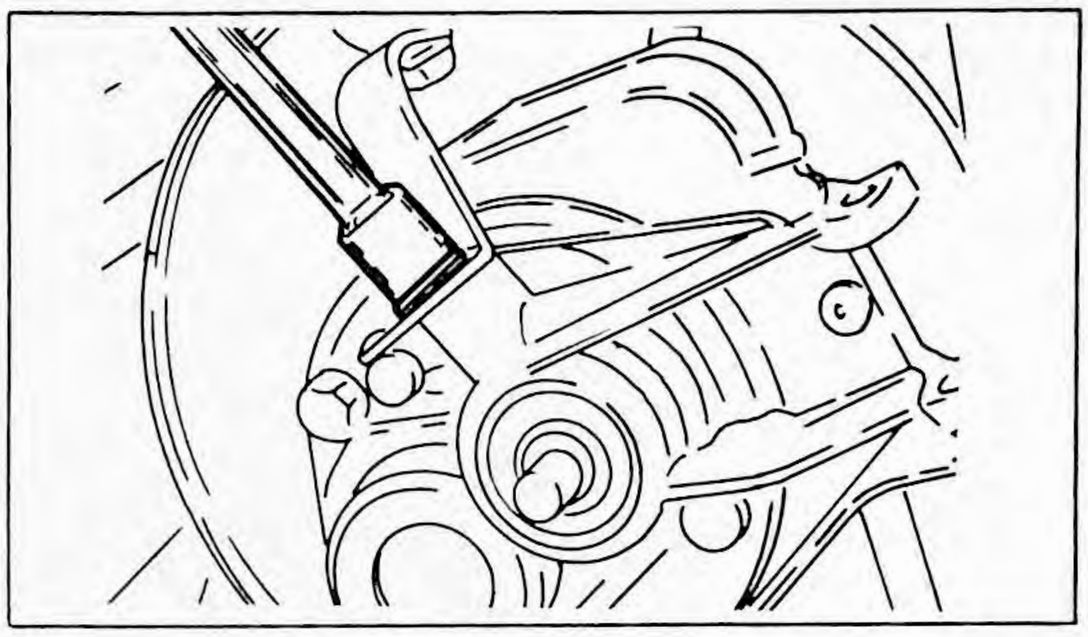

Fig. 3-15

C-4-3 Remove the two secondary shaft housing mounting bolts.

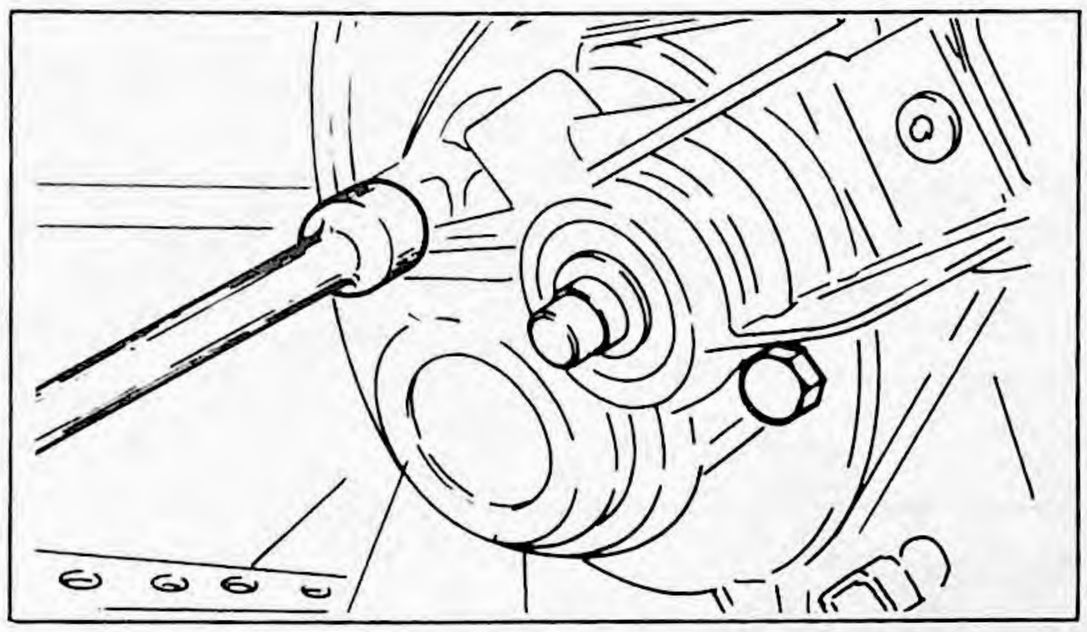

Fig. 3-16

C-4-4 Pull out the left secondary shaft housing.
For easy operation, tap the housing with a plastic-tip hammer.

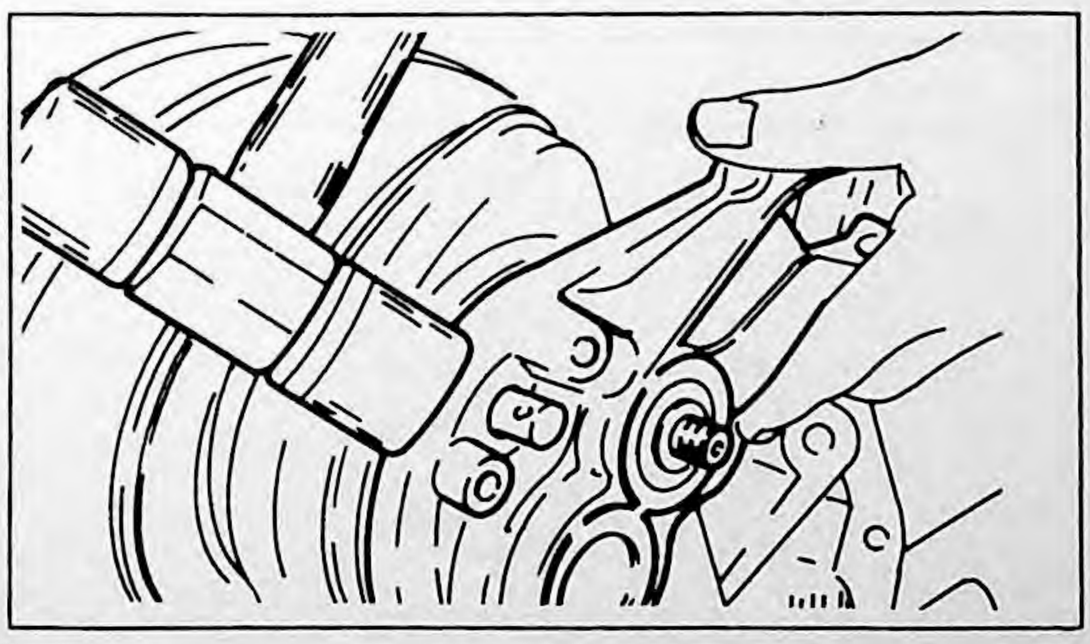

Fig. 3-17

C-4-5 The illustration shows the transmission in the secondary housing after the left secondary shaft housing is removed. A, B and C indicate the shift fork guide bar, secondary shaft and counter axle, respectively. Note that a shim is attached to the secondary shaft.

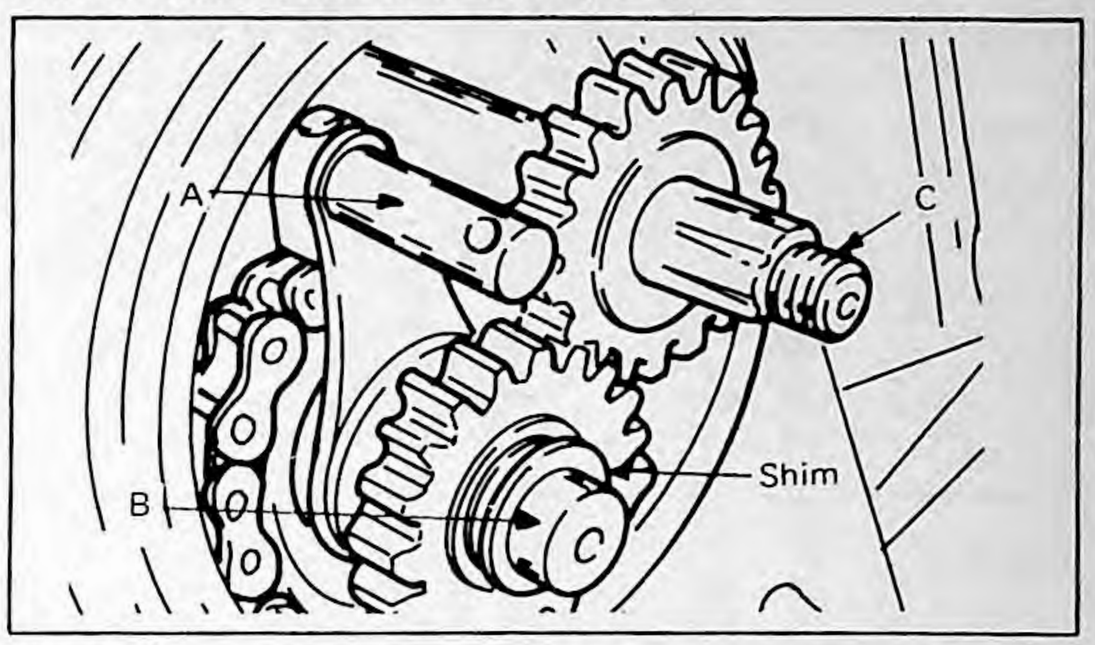

Fig. 3-18

C-4-6 After removing the left secondary shaft housing, remove the bolt as illustrated, and remove the spring and shift pin from the inside of the hole.
The removal of the spring and shift pin in necessary. If they are kept in position, the shift fork guide bar can not be installed because its end is obstructed by the shift pin forced by the spring.

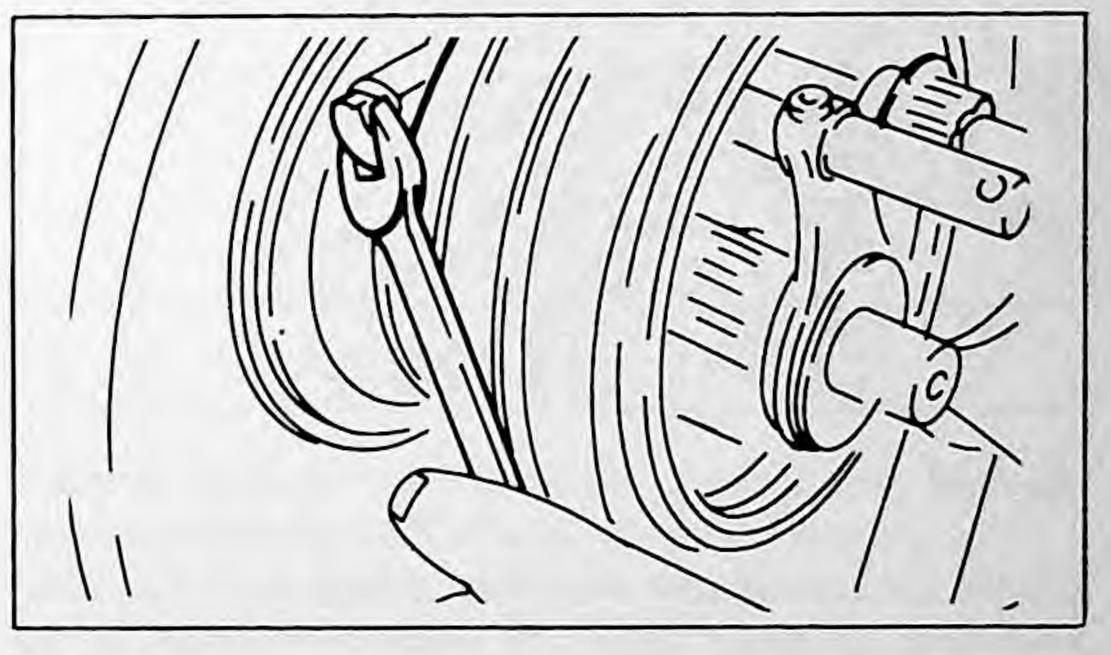

Fig. 3-19

C-4-7 Remove both gears 1 and 2, and then pull out the shift fork guide bar. Next, remove the dog clutch.

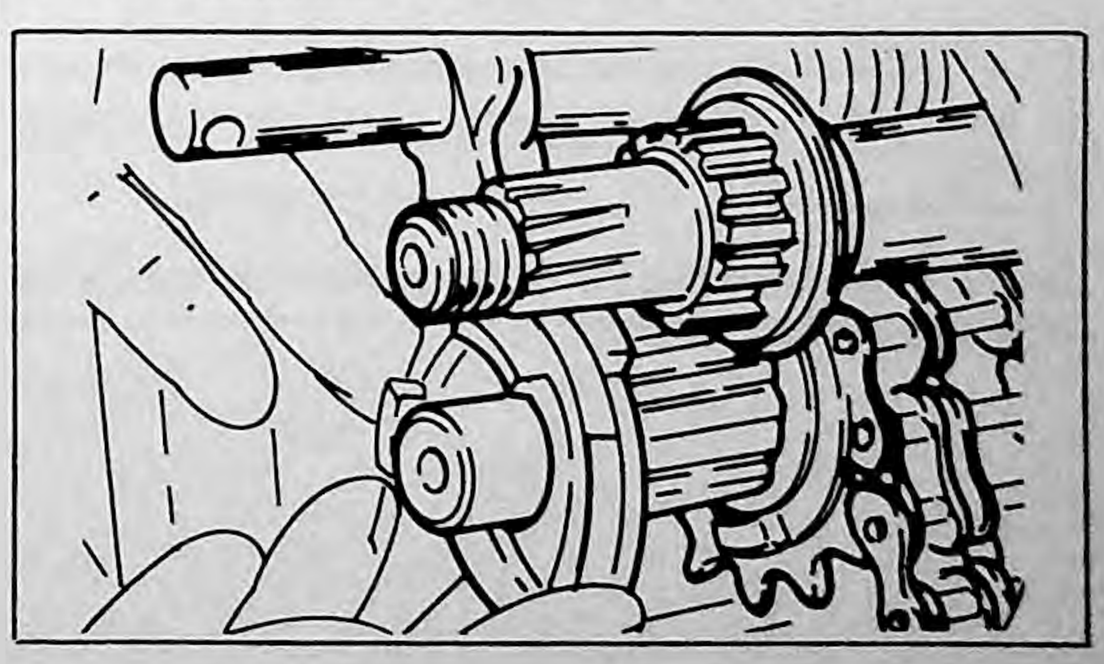

Fig. 3-20

C-4-8 Remove the circlip holding the drive chain sprocket by using a clip plier.

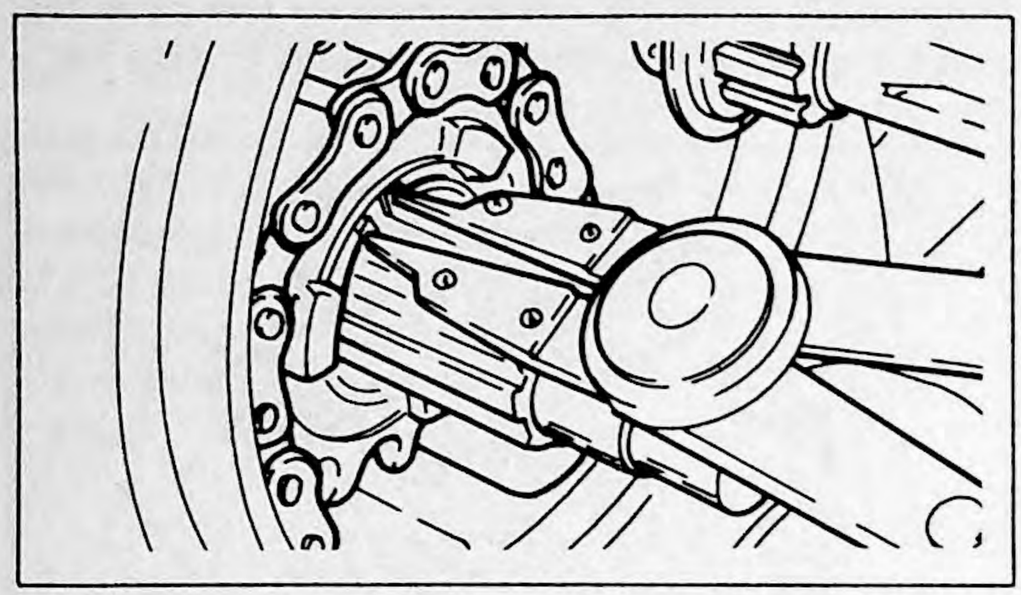

Fig. 3-21

C-4-9 As illustrated, pull the drive chain sprocket a little toward you, and allow a small space to facilitate the removal of the counter axle.
Remove the counter axle. Note that there is a shim between gear 3 and right secondary housing.

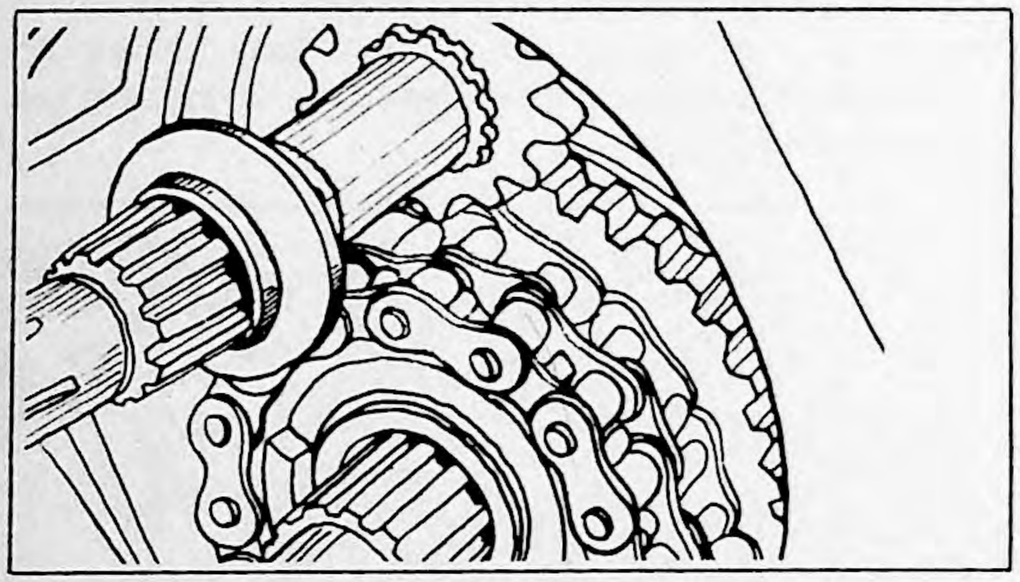

Fig. 3-22

C-4-10 To remove the secondary sheave ass'y from the secondary housing, follow the procedures given in the SL433B. Care should be taken not to drop the drive chain sprocket and gear 4 into the chain housing.
Note that there is a shim between gear 4 and right secondary shaft.

C-4-11 When installing the secondary sheave ass'y, be sure to feed Shell ALVANIA grease #2 or #3 into each needle bearing.

C-4-12 Avoid operating the quick change system while the secondary sheave is in action.

3–3 CHAIN CASE AND FRONT AXLE REMOVAL

3–3–1

To remove the front axle, fully slacken the track so that the front axle can easily be removed from the frame.
Loosen the rear pivot bolt lock nut, and fully loosen the adjusting screw, or remove it from the pivot bolt.

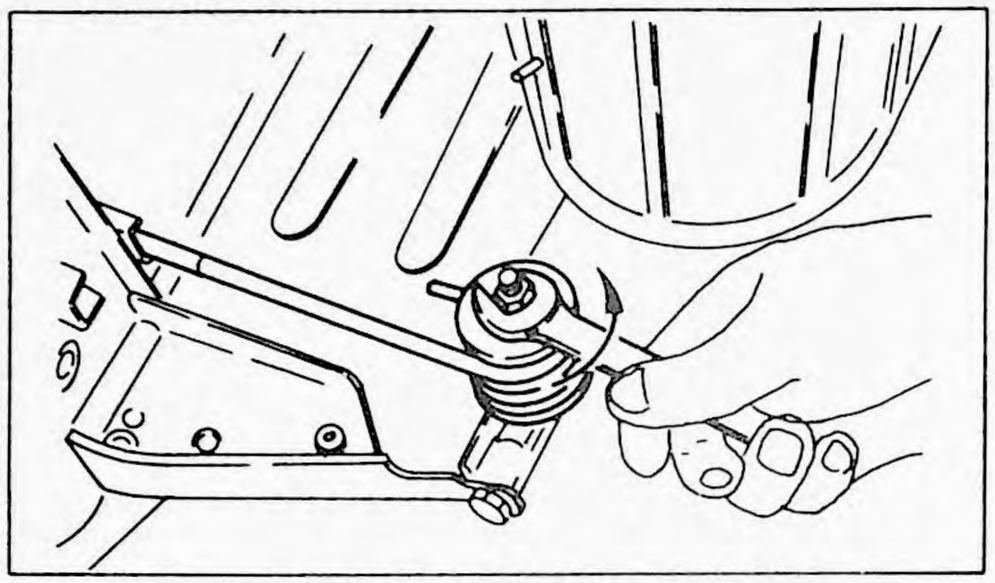

Fig. 3-23

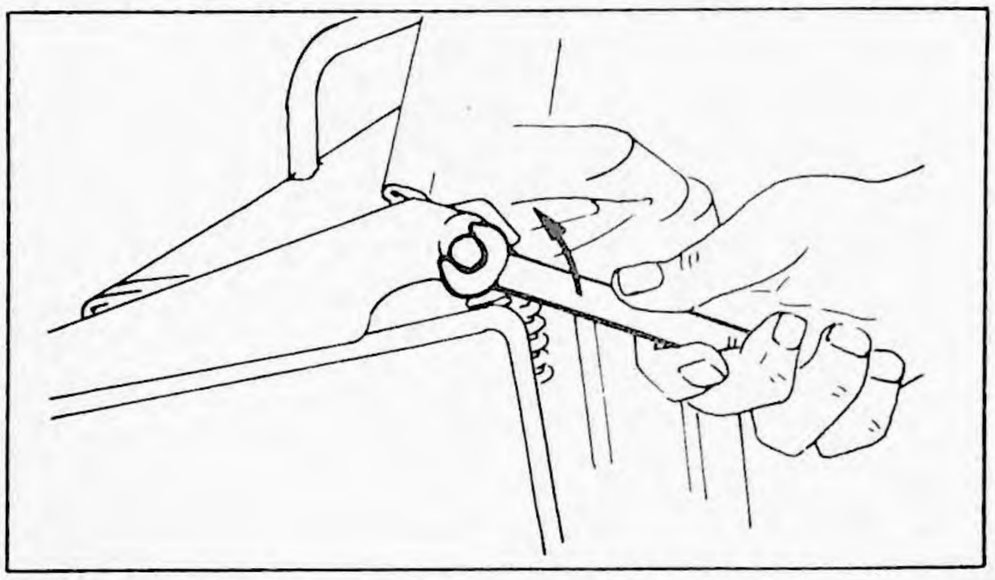

Fig. 3-24

3–3–2

Return to the left side of the snowmobile. You will find at the bottom of the chain case, the chain case cover. Remove the six retaining bolts and remove the chain case cover. It should be noted that an oil drip pan should be placed beneath the snowmobile as oil will drain out of the chain case once the cover has been removed.

Note:

This cover need only be removed if the driven sprocket is to be changed.

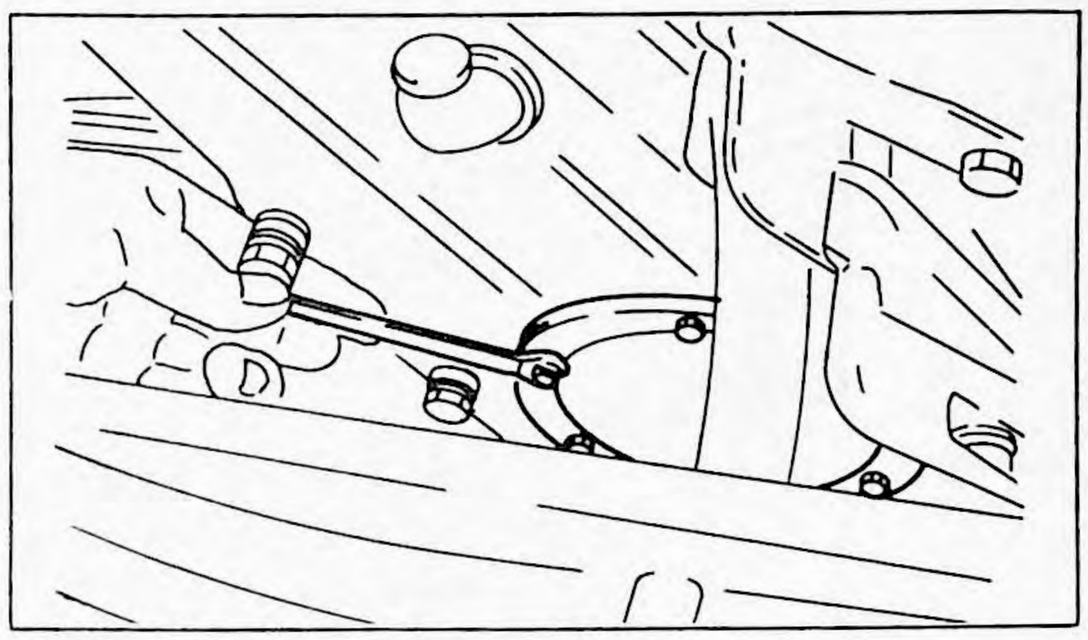

Fig. 3-25

3–3–3

Remove the four 13 mm bolts holding the chain case cover. On an 18 in. track model, the chain case top is held to the steering gate through the bracket. Remove the 13 mm bolts, and remove the bracket.

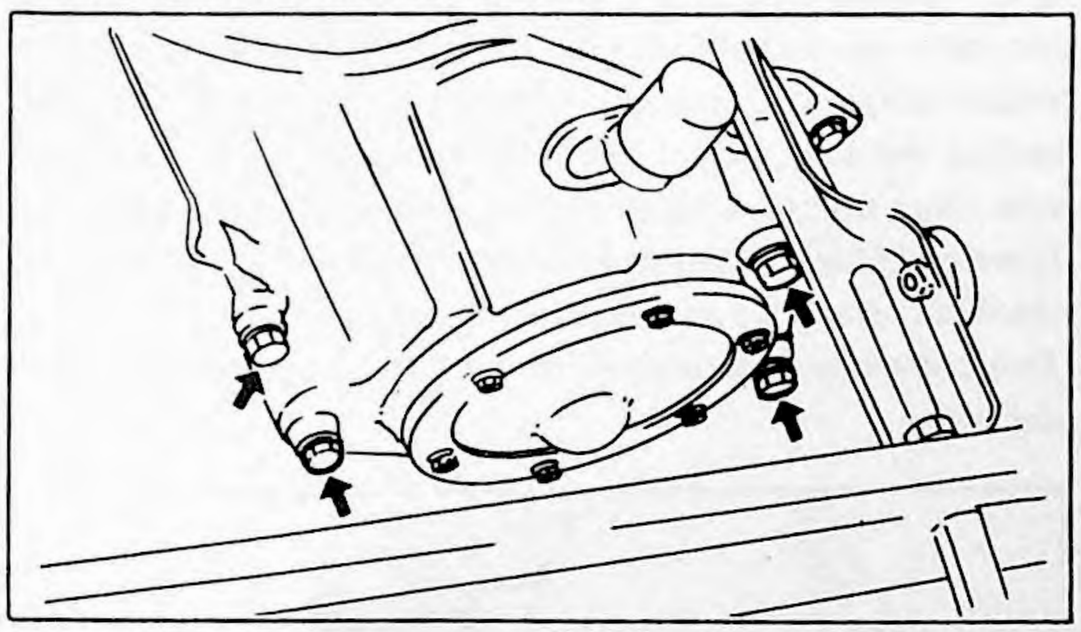

Fig. 3-26

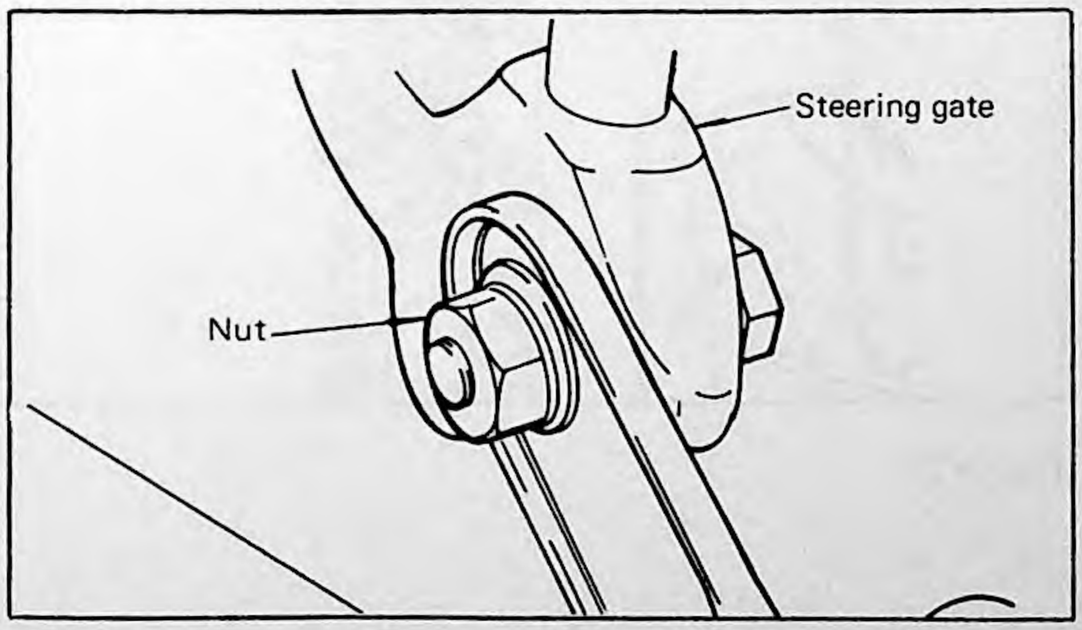

Fig. 3-27

3–3–4

Position yourself at the right side of the snowmobile for this next step. Pry off the rubber cap in the center of the axle housing.

On a model equipped with a speedometer, remove the two 10 mm bolts, and remove the speedometer housing.

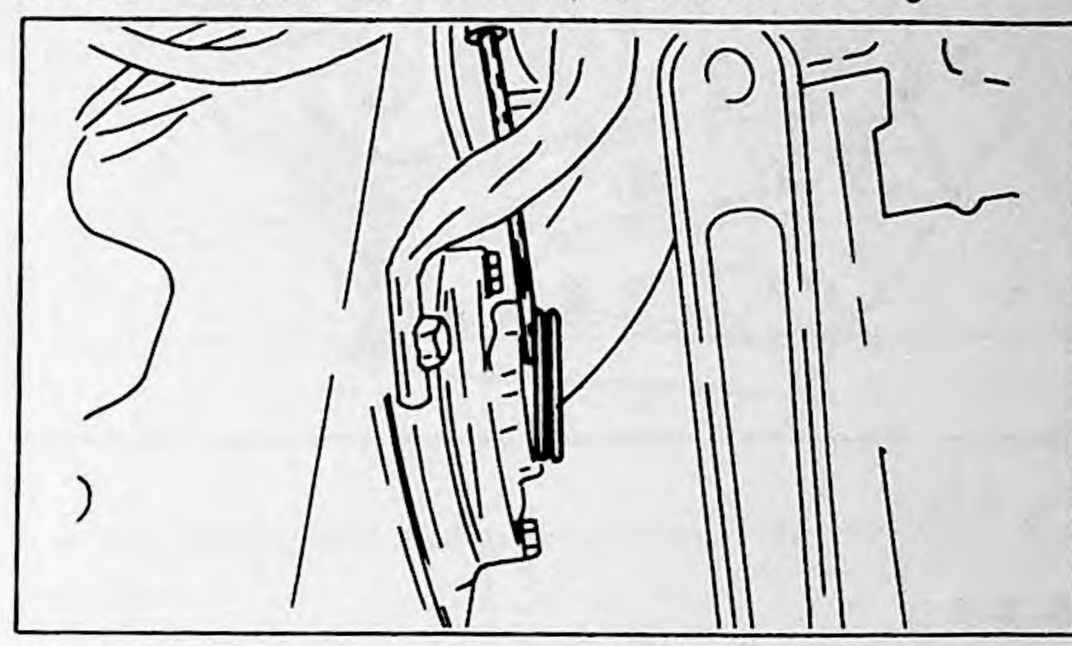

Fig. 3-28

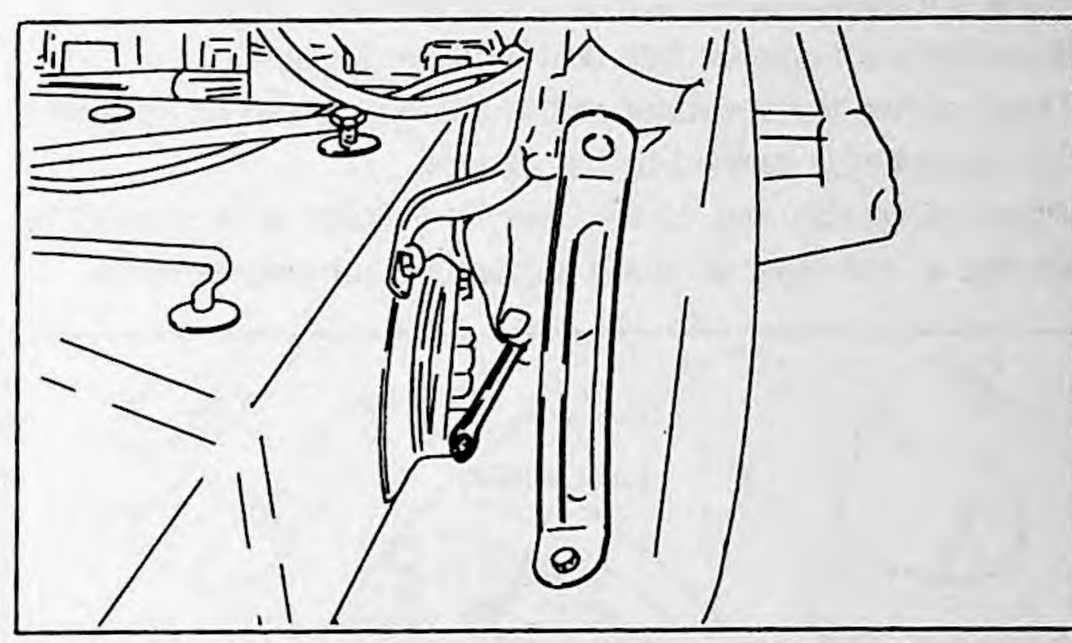

Fig. 3-29

Remove the axle nut and bellevile washer with a special tool (Nut removal tool) or a 26 mm socket wrench.

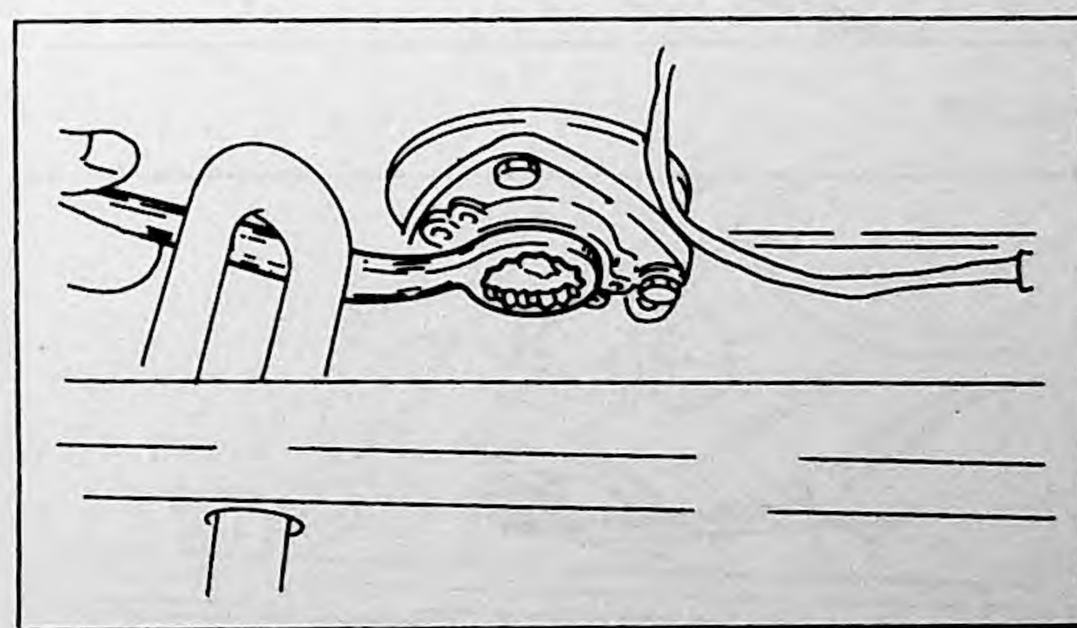

Fig. 3-30

The right-hand axle housing is held in place by three bolts (10 mm). At this time, remove the bolts from the frame and pull off the housing.

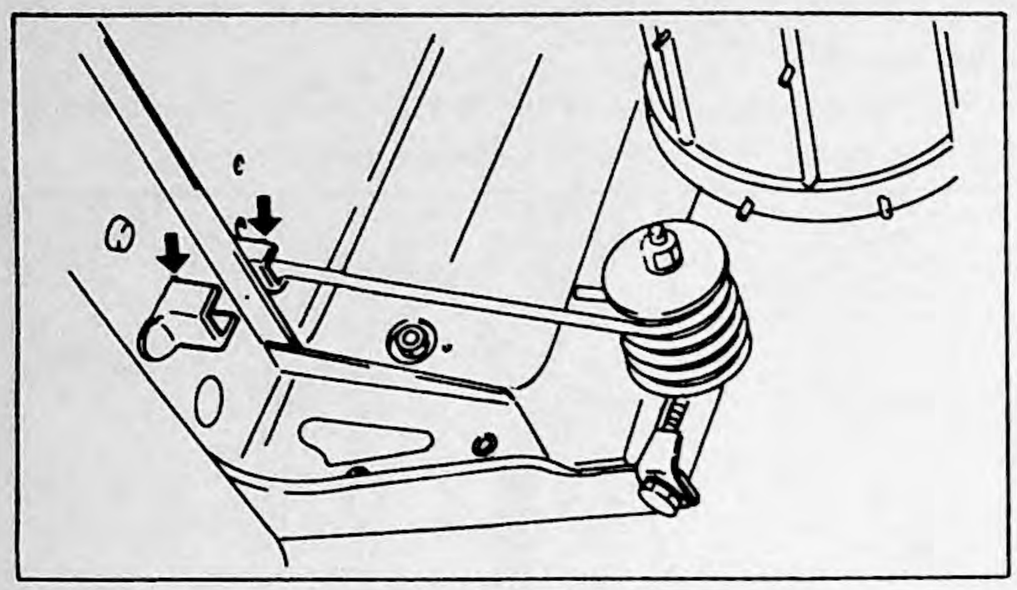

Fig. 3-31

3–3–5

Place the snowmobile with the left side up.
Bend the lock washer flat, and remove the bolt.
Then, either the sprocket or the chain case can be removed.
The sprocket is splined to the journal.
When removing the chain case, the front axle should be shifted to the right as much as possible for easy removal.

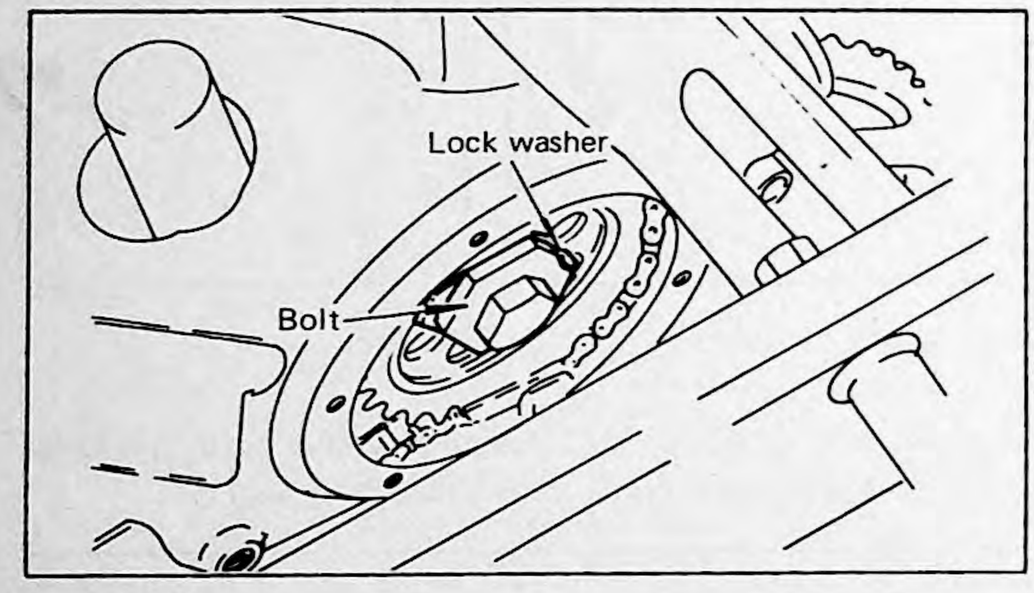

Fig. 3-32

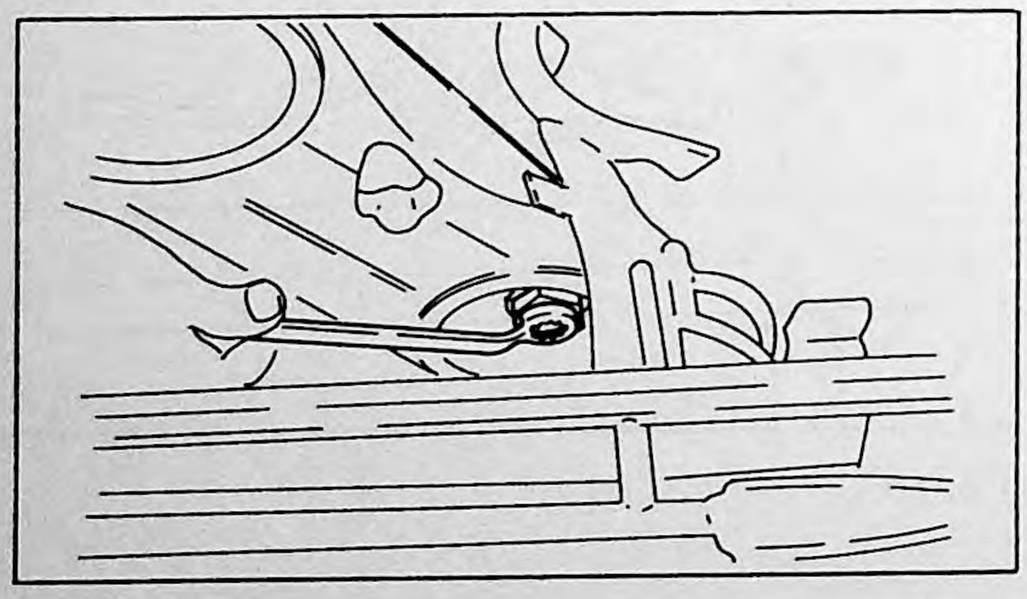

Fig. 3-33

3–3–6

At this time it will be necessary to tip the snowmobile on its right side in order to allow the axle to be removed.

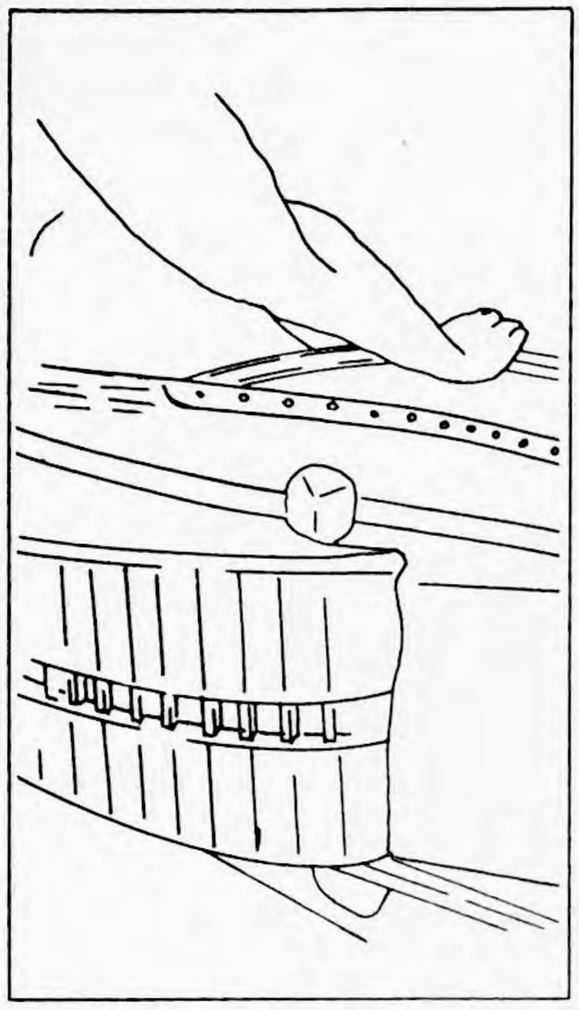

Fig. 3-34

3–3–7

Reach underneath the snowmobile and grab hold of the axle. Lift up on the axle as far as possible so that the tip of the axle will extend up out of the chain case hole. This should allow you enough room to take hold of the right end of the axle, pull it free of its housing on the right-hand side, and pull the right end of the shaft backward and downward sliding the shaft free. It is most likely that the track will drop out as the axle is being removed.
This completes the removal of the front axle assembly from the frame.

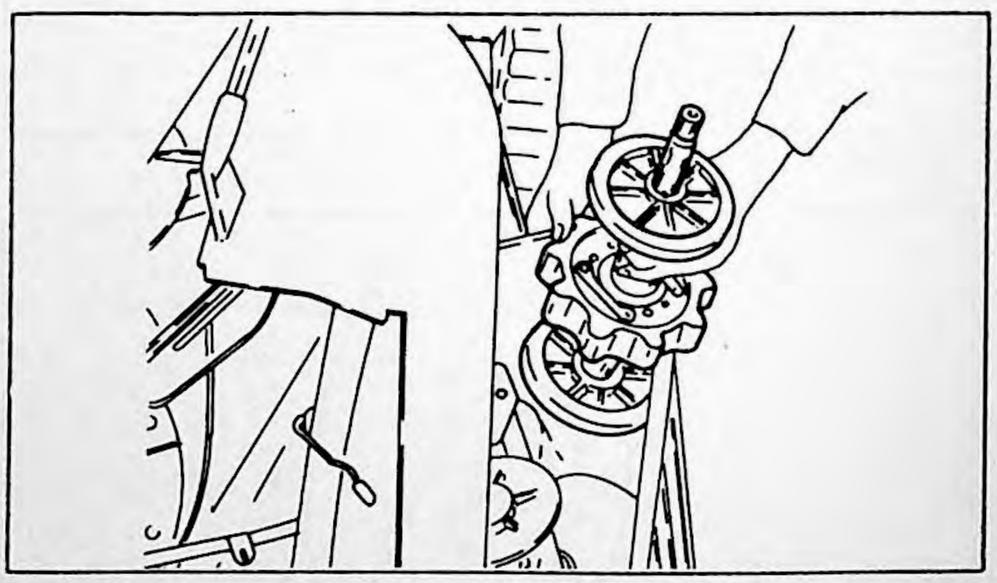

Fig. 3-35

3–4 FRONT AXLE INSTALLATION

3–4–1

When installing the front axle, the front axle end should be inserted into the chain housing. With the collar, sprocket, and journal installed on the chain housing, insert the front axle end into the chain housing.

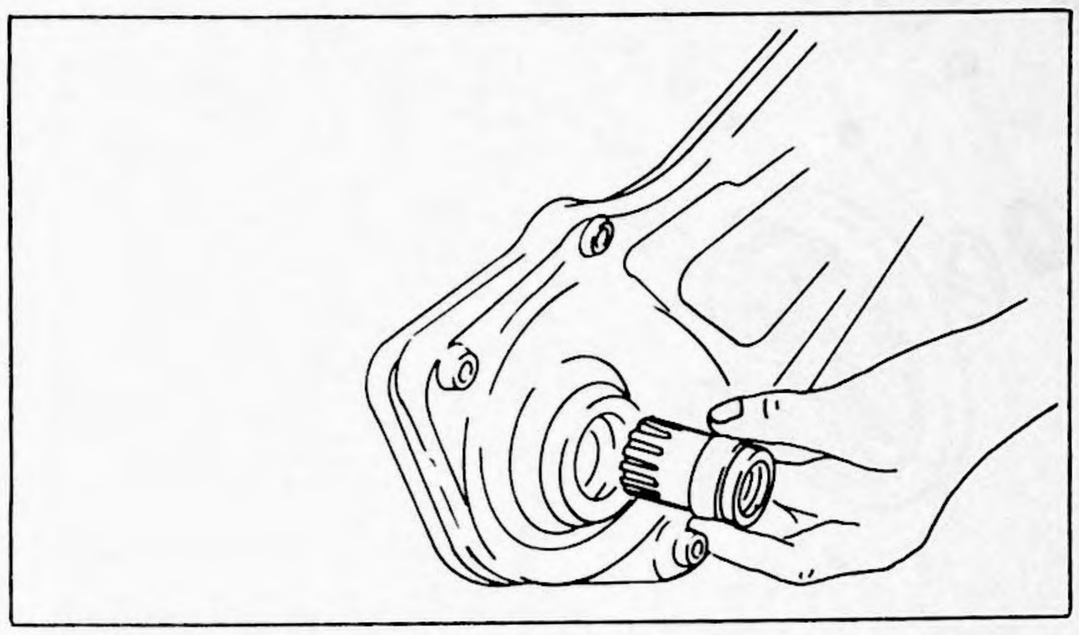

Fig. 3-36

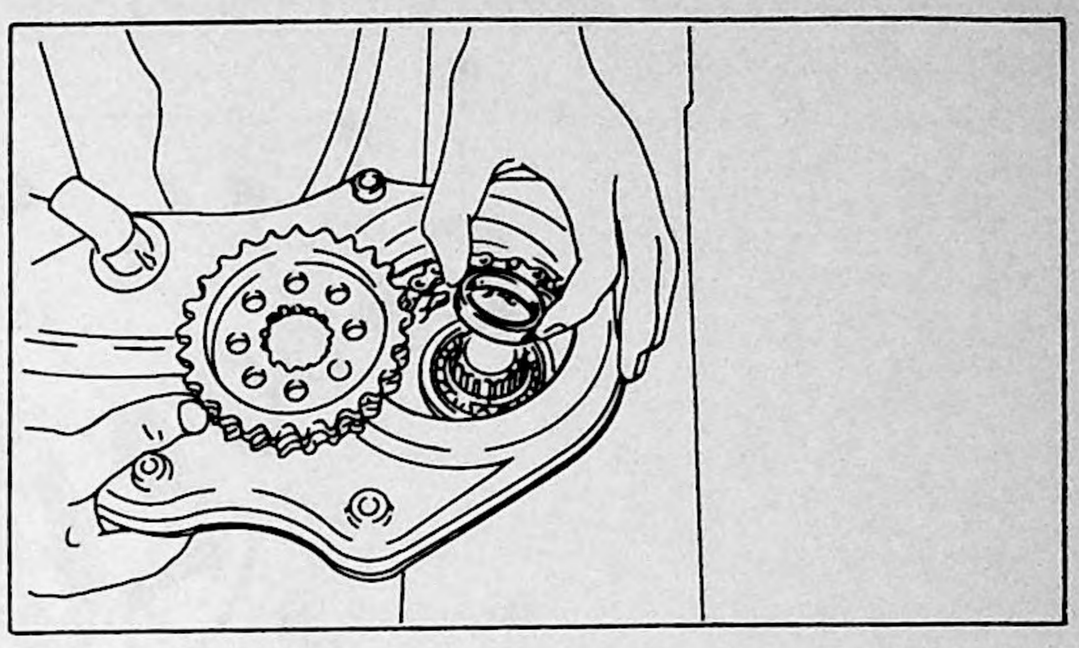

Fig. 3-37

For the subsequent operation, reverse the procedure for installation.

FRONT AXLE

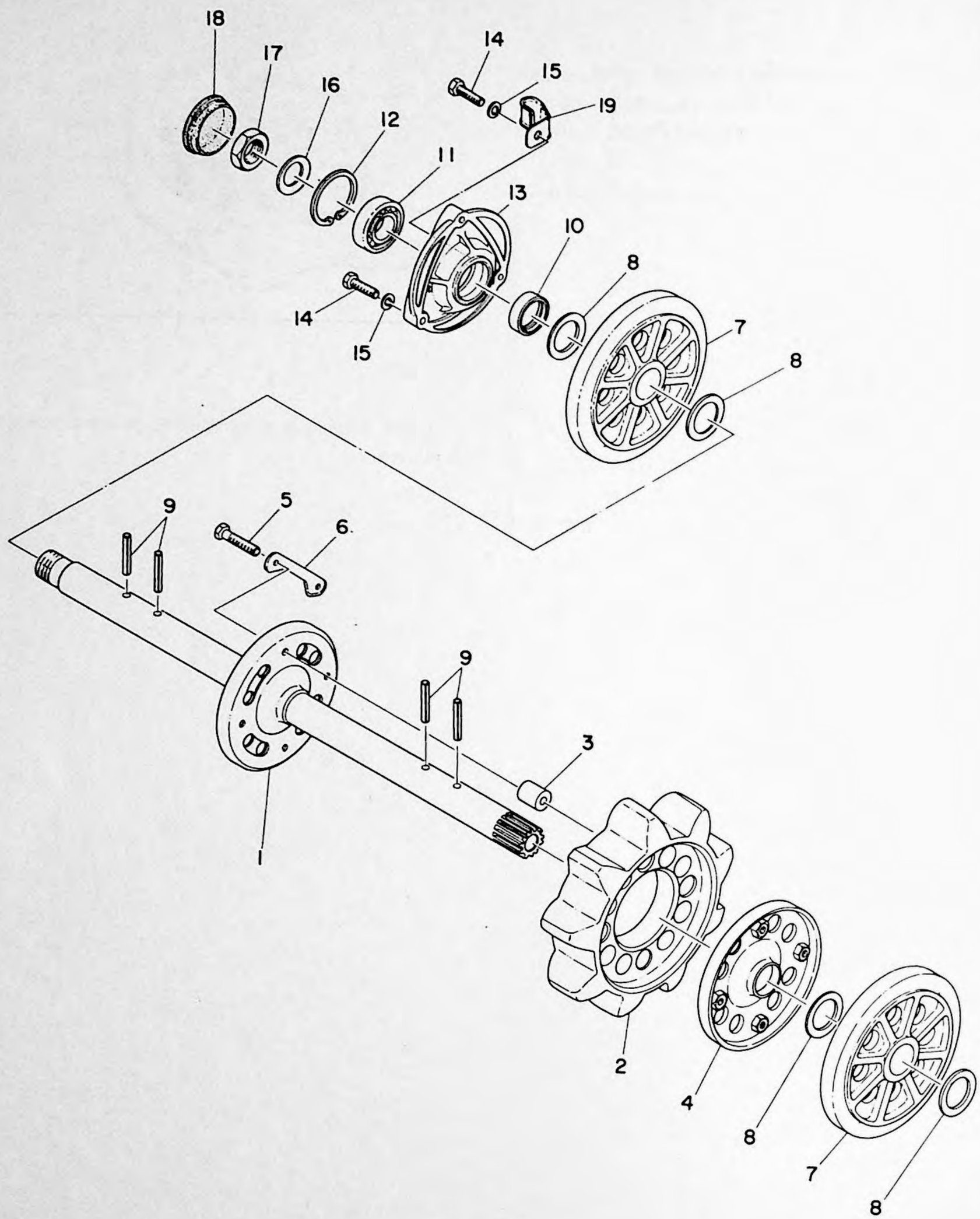

Fig. 3-38

Ref. No.	Description	Q'ty	Ref. No.	Description	Q'ty
1	FRONT AXLE COMP.	1	11	BEARING (B6004 special)	1
2	WHEEL, sprocket 1	1	12	CIRCLIP (R-44)	1
3	COLLAR	4	13	HOUSING, front axle	1
4	RIM, sprocket wheel 2	1	14	BOLT	3
5	BOLT	4	15	WASHER, spring	3
6	WASHER, lock	2	16	WASHER	1
7	GUIDE WHEEL COMP.	2	17	NUT	1
8	PLATE	4	18	CAP	1
9	PIN, spring	4	19	CLIP, wire	1
10	OIL SEAL (SD-25-34-7)	1			

TRACK DRIVE

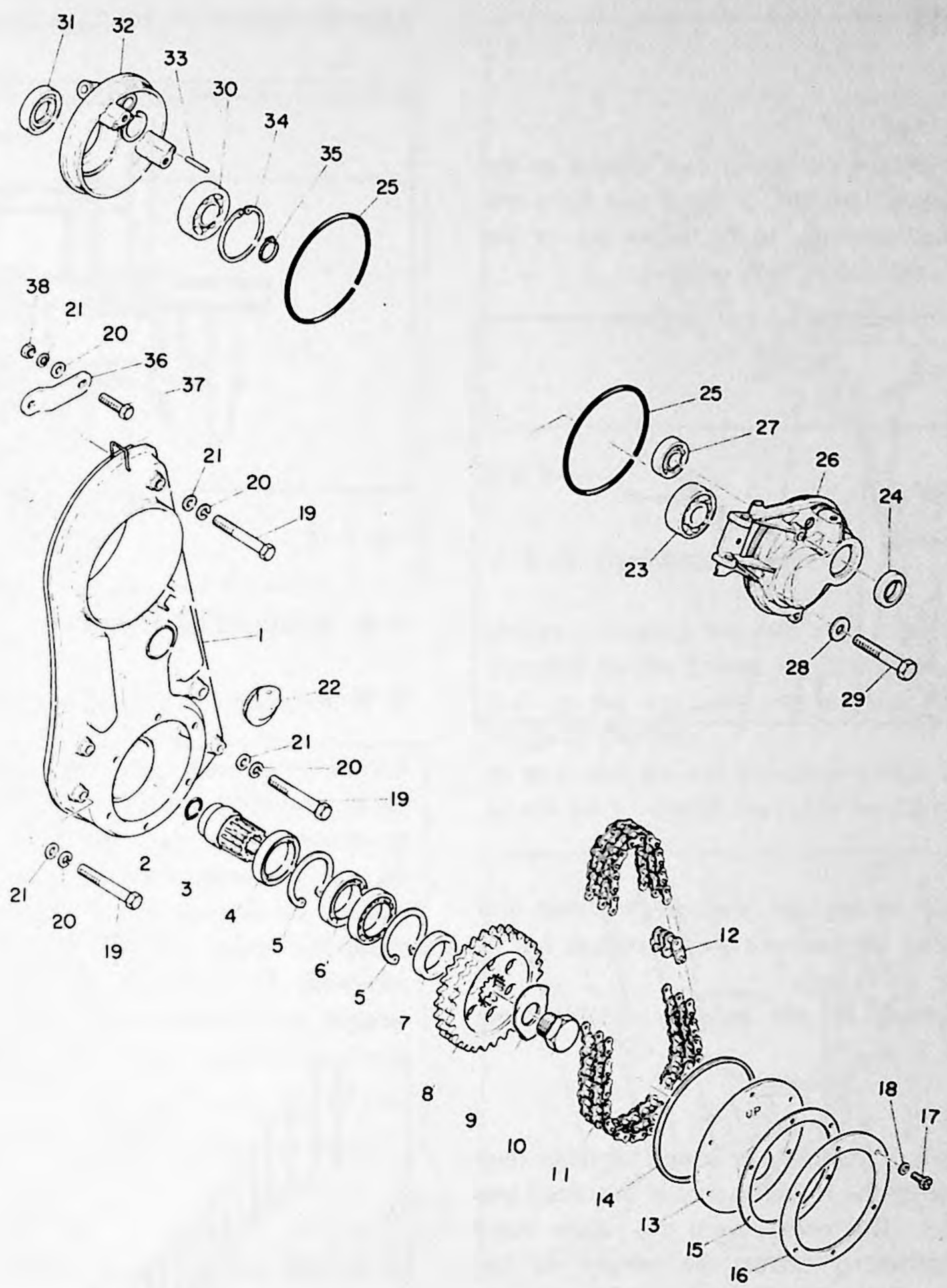

Fig. 3-39

Ref. No.	Description	Q'ty	Ref. No.	Description	Q'ty
1	HOUSING, chain	1	19	BOLT	5
2	O-RING (3.2-24.5)	1	20	WASHER, spring	6
3	JOURNAL	1	21	WASHER, plain	6
4	OIL SEAL (SD-40-55-8)	1	22	CAP 2	1
5	CIRCLIP (R-55)	2	23	BEARING (B6303)	1
6	BEARING (B6907 special)	2	24	OIL SEAL (SD-22-32-5)	1
7	COLLAR	1	25	O-RING (3.1-113)	2
8	SPROCKET, chain driven (23T)	U.R	26	HOUSING, secondary shaft left	1
	SPROCKET, chain driven (24T)	1	27	BEARING (B6203C3)	1
	SPROCKET, chain driven (25T)		28	WASHER	2
9	SPRING, belleville	1	29	BOLT	2
10	BOLT	1	30	BEARING (B6206C3)	1
11	CHAIN	U.R	31	OIL SEAL (SD-35-48-5)	1
	CHAIN	1	32	HOUSING, secondary shaft right	1
12	JOINT, chain	1	33	PIN, dowel (4-17.8)	2
13	CAP, housing	1	34	CIRCLIP (R-62)	1
14	RING, rubber housing	1	35	CIRCLIP (S-30)	1
15	GASKET	1	36	STAY 1	1
16	PLATE	1	37	BOLT	1
17	BOLT	6	38	NUT	1
18	WASHER	6			

3–5 BOGIE WHEELS

3–5–1

Each set of bogie wheels is bolted to ears welded to the bottom of the chassis. Removal of these two bolts will alloy the bogie wheel assembly to be taken out of the chassis. The bolts are secured by lock washers.

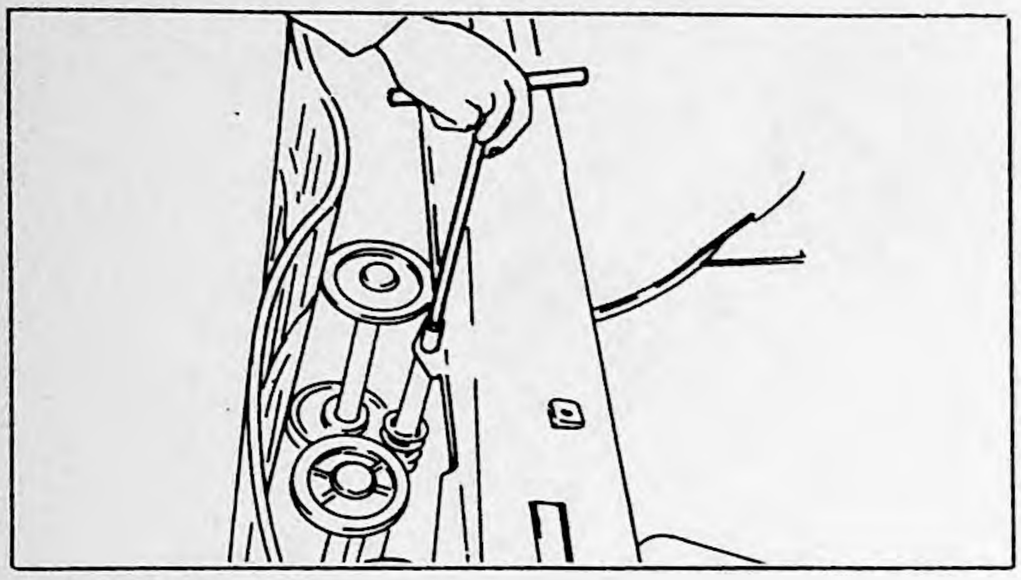

Fig. 3-40

3–5–2

The individual bogie wheels are rivetted together and cannot be disassembled; the bearings are sealed and not to require lubrication.
If the unit is disassembled all the metal to metal surfaces should be greased.

Precautionary Note:

If the snowmobile is immobile or stored for more than a week, the rear of the machine should be raised and placed on blocks. This will prevent the rubber bogie wheels from flattening under the weight of the machine.

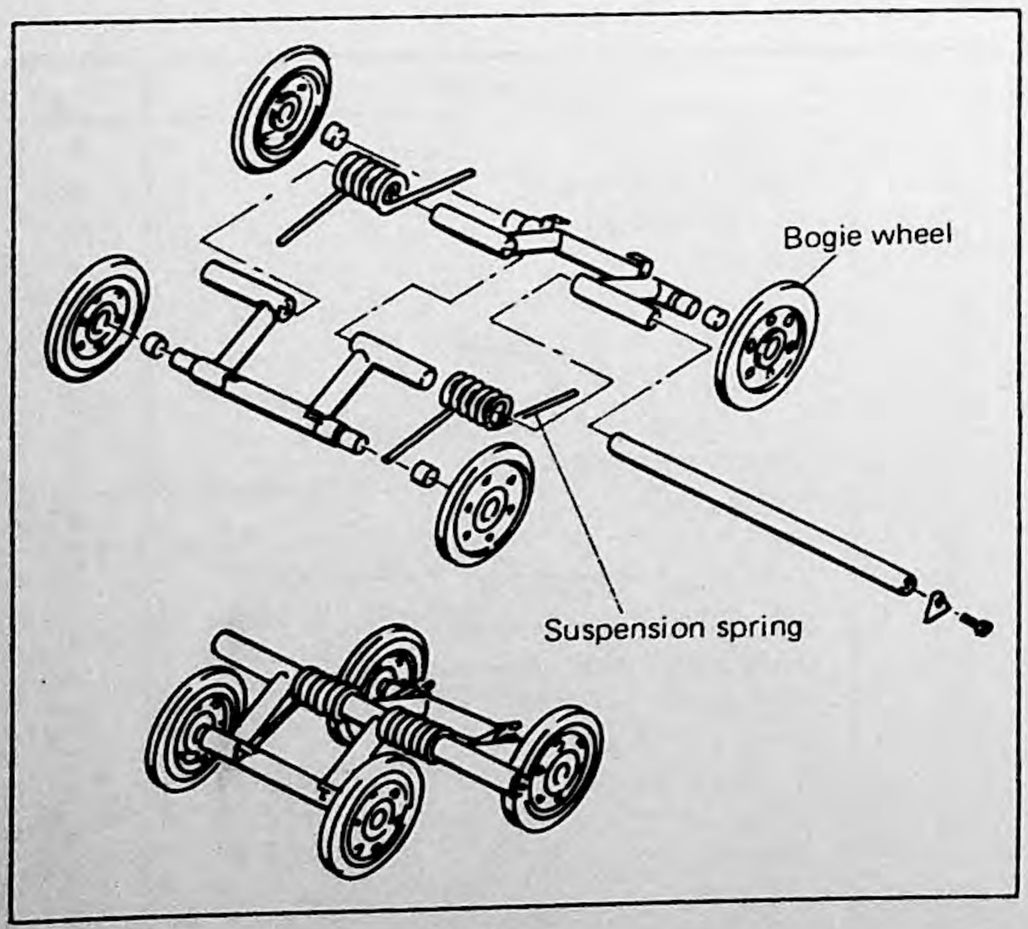

Fig. 3-41

After the installation, bend the four spring end stoppers.

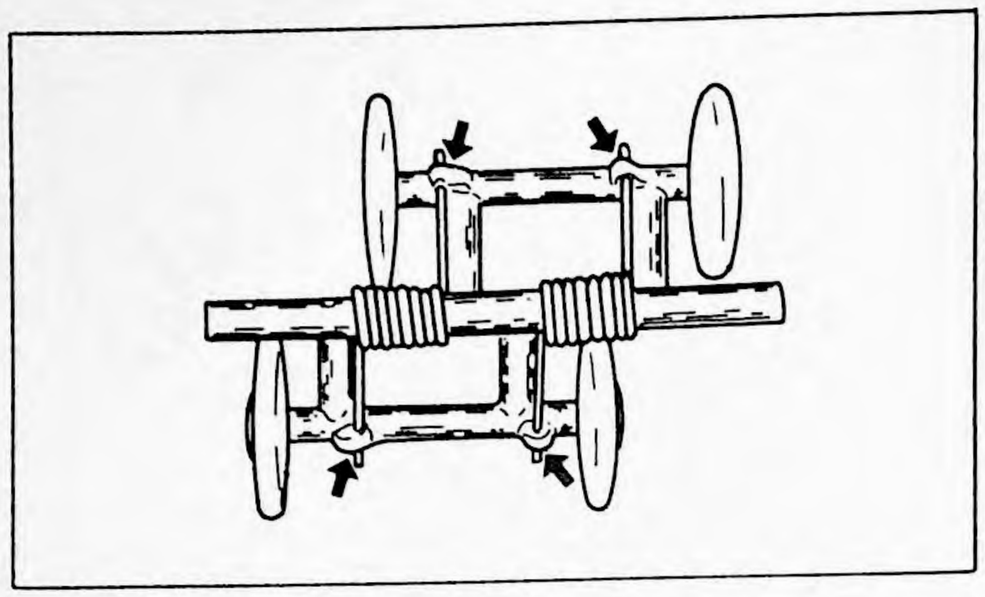

Fig. 3-42

3–6 REAR AXLE REMOVAL

3–6–1

Remove the track adjusting screw, pivot rear screw and collar, and then remove the rear pivot arm and rear axle as an assembly from the frame.
As you may understand from the illustration, the rear axle can not be removed from the drive track in this stage, and therefore, either of the two pivot rear arms must be removed. To remove, loosen the nut using a 26 mm socket wrench, and remove the nut.

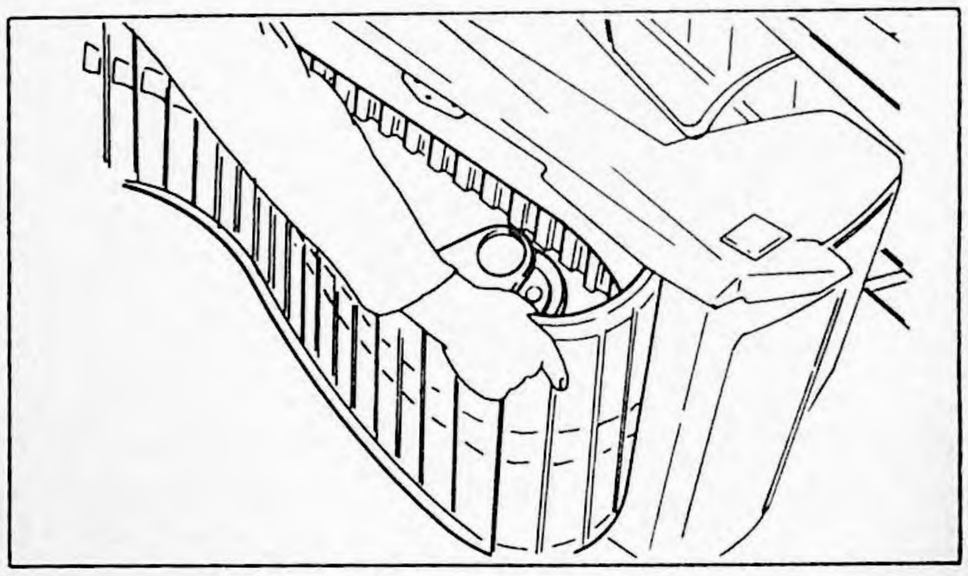

Fig. 3-43

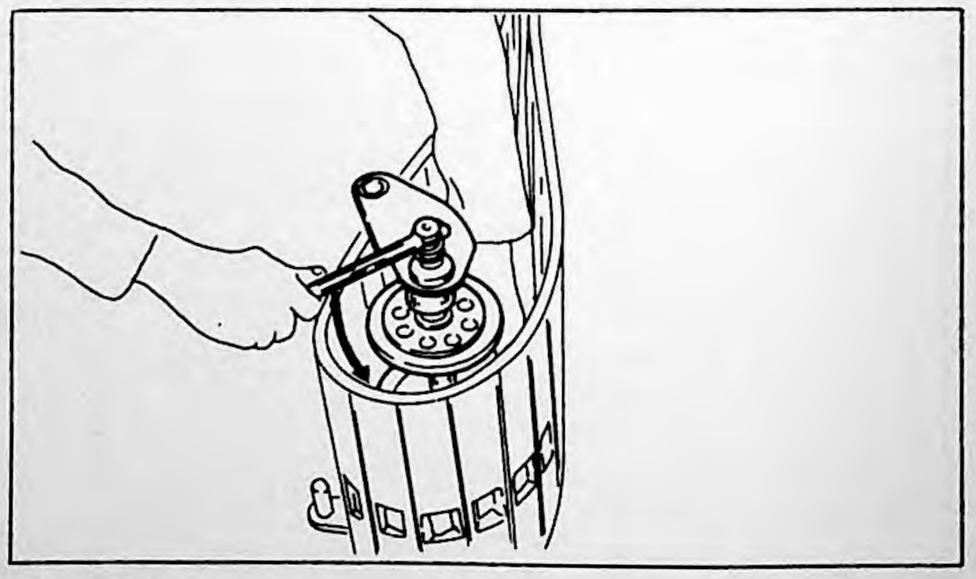

Fig. 3-44

3–6–2 Rear Axle Disassembly

Remove the 26 mm nut, and remove the remaining pivot rear arm from the rear axle.

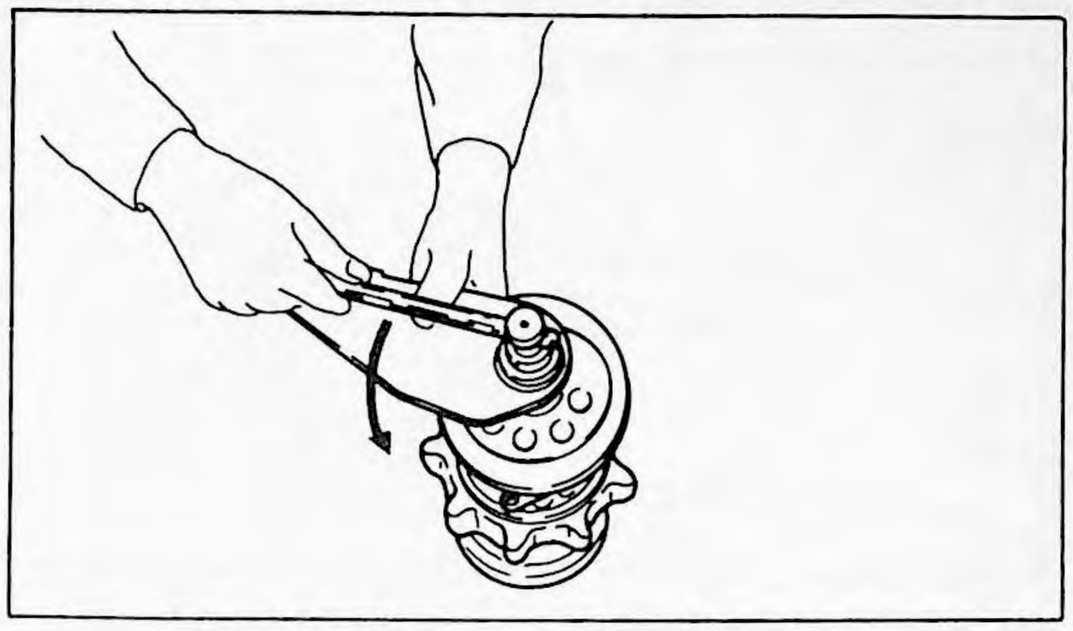

Fig. 3-45

Pull out the spring pin holding the suspension wheel.

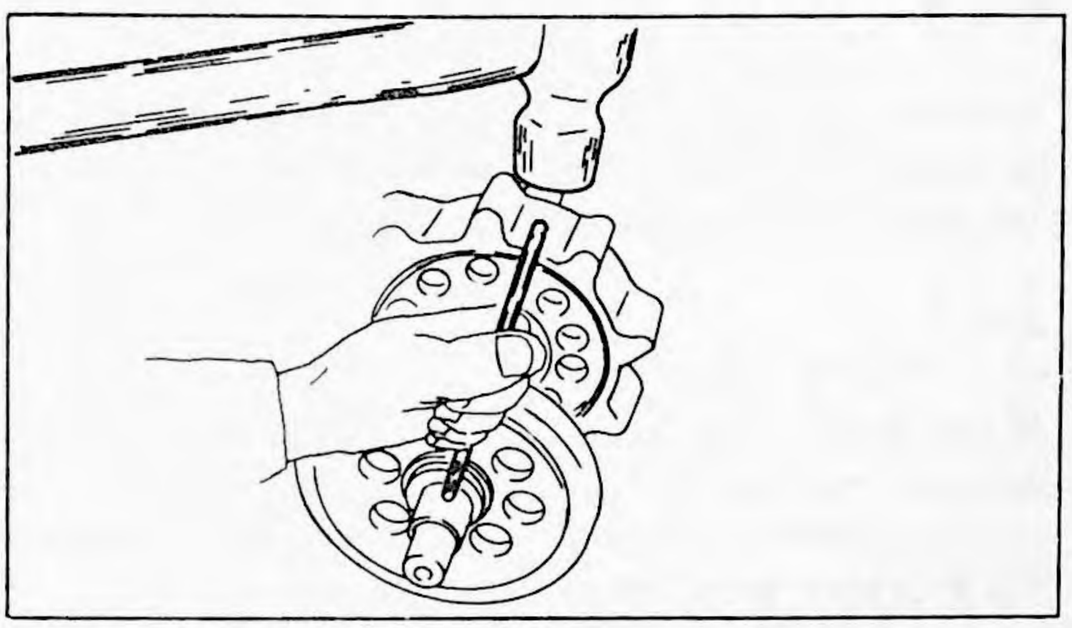

Fig. 3-46

Straighten the four bolt lock washers, and remove the bolts. Remove the rim, and then the sprocket can be removed.

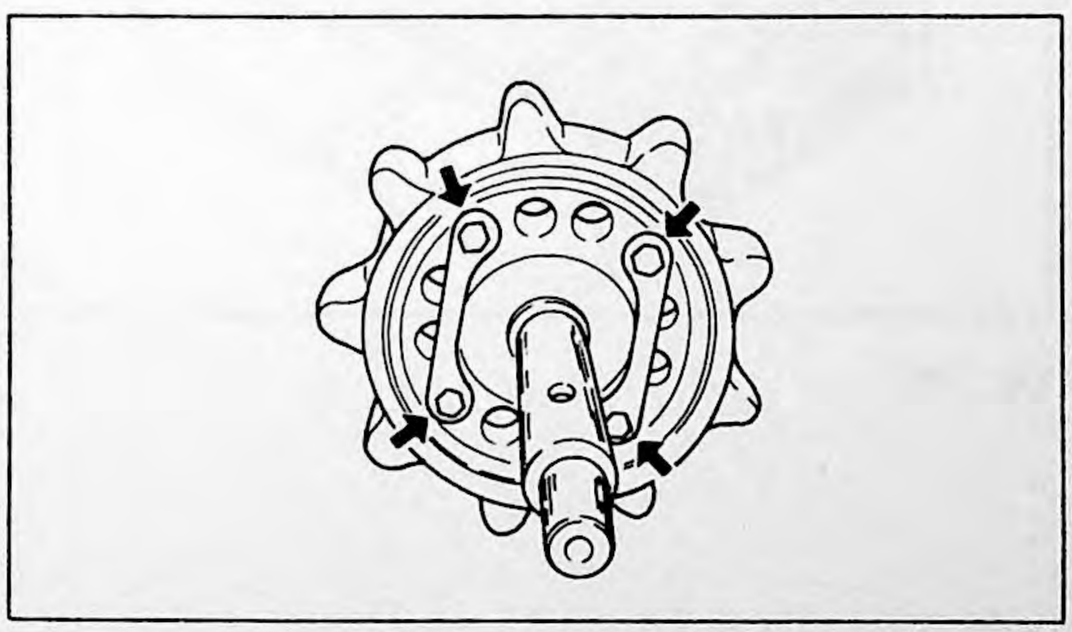

Fig. 3-47

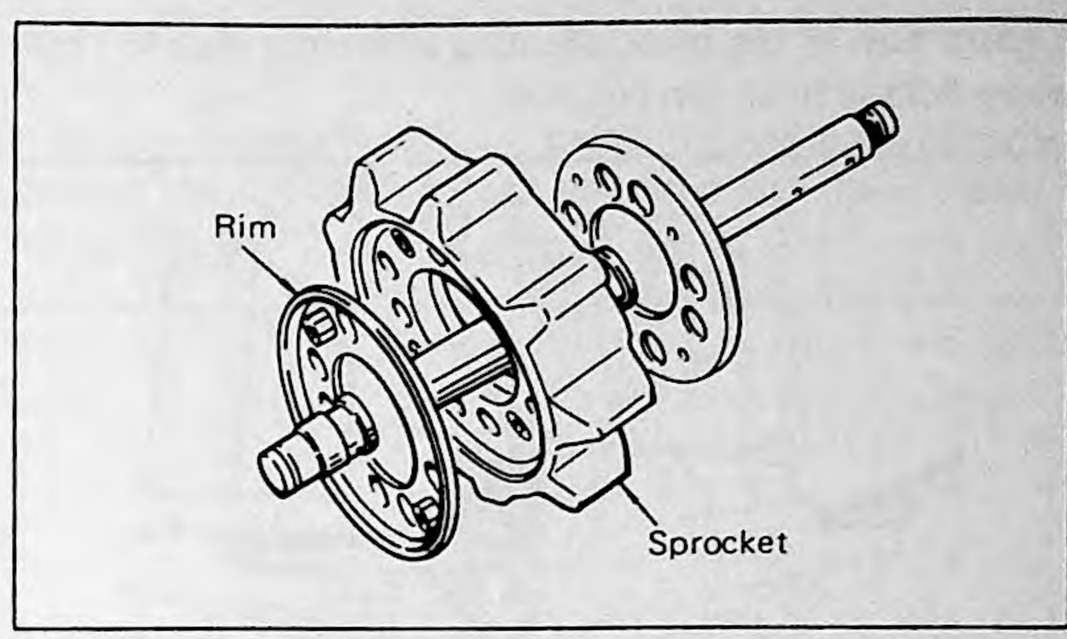

Fig. 3-48

3–6–3 Rear Axle Installation

Before installing the rear axle, the bogie wheels must be installed on the frame. As illustrated, install the pivot rear arm on the rear axle with the rear axle positioned on the inside of the track.
In this case, the rear arm pivot should be positioned outside of the track. Install the collar on the rear arm.

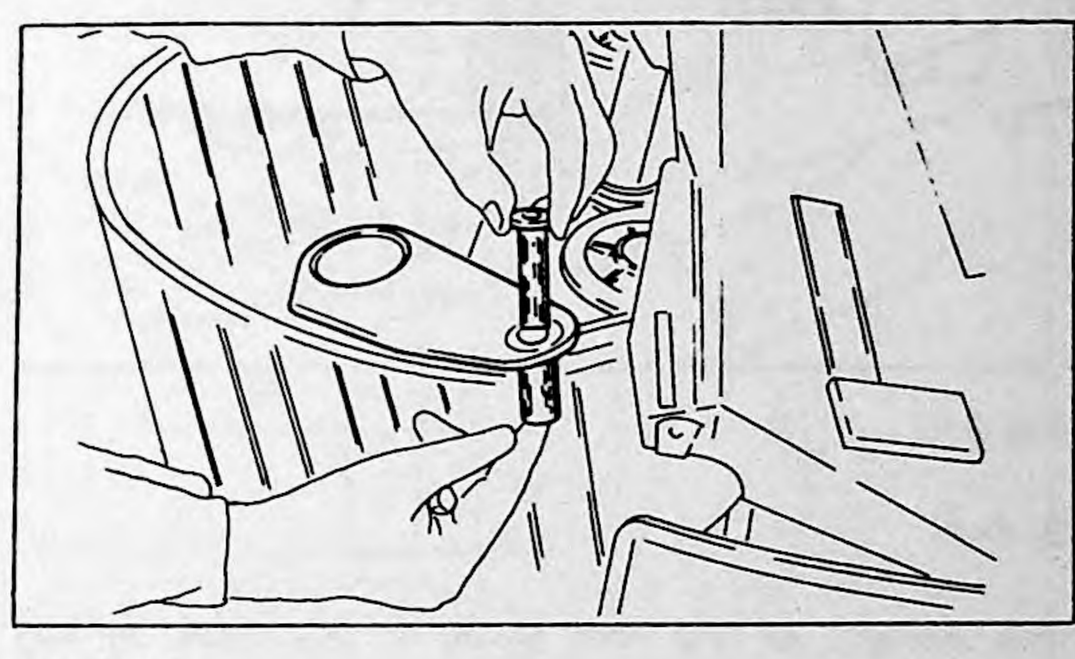

Fig. 3-49

Insert the pivot rear screw into the pivot hole in the pivot rear arm, and secure the pivot rear arm to the frame.

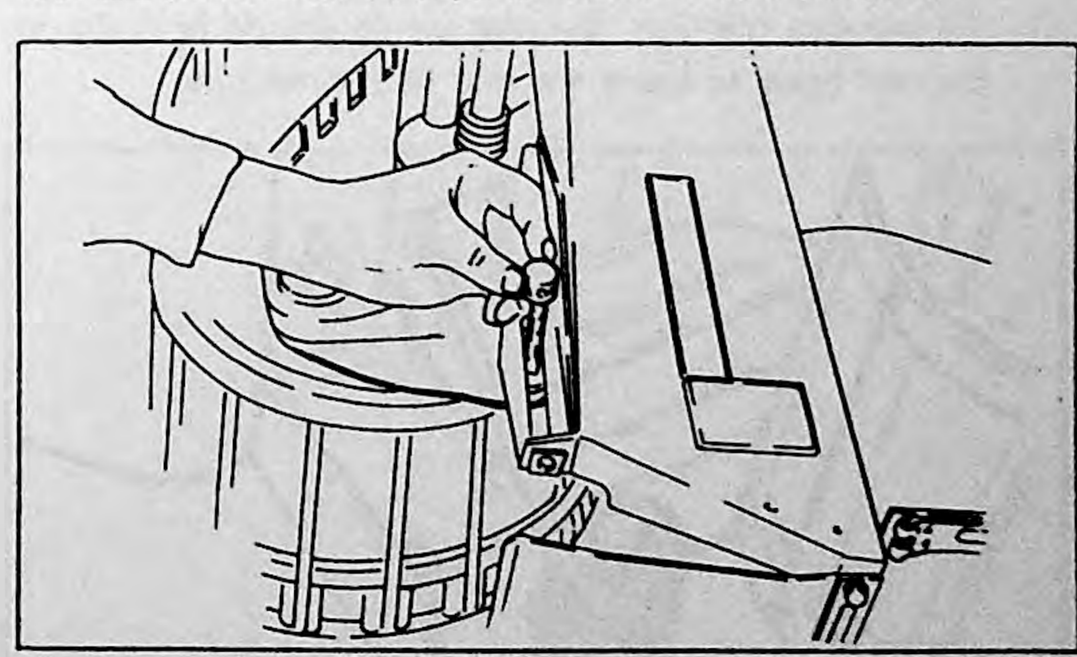

Fig. 3-50

Lightly turn in the track adjusting screw into the pivot rear screw hole to hold it in position.

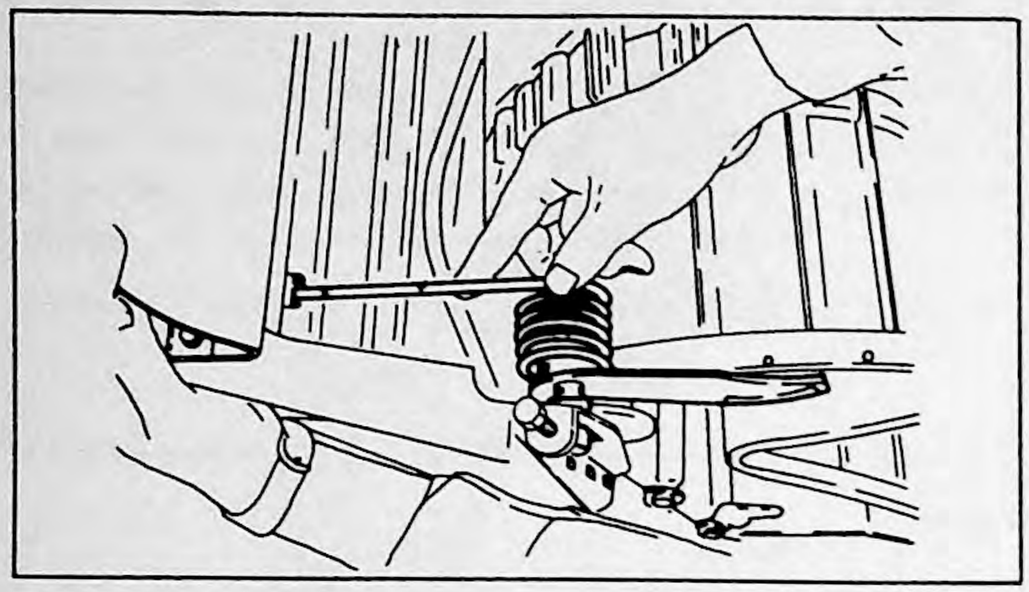

Fig. 3-51

Install the rear spring.

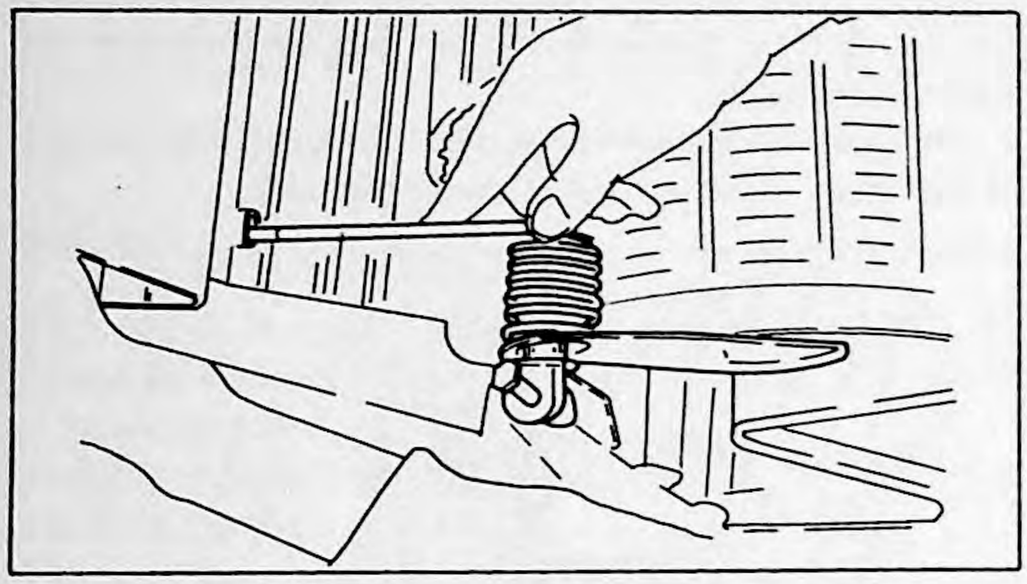

Fig. 3-52

3–6–4

The strength of the rear spring is adjustable to two positions according to snow and running conditions.

a) To make the steering more positive, the rear spring should be hung on the front hook to raise the rear of the machine.

b) To increase traction, the rear spring should be hung on the rear hook to lower the rear of the machine.

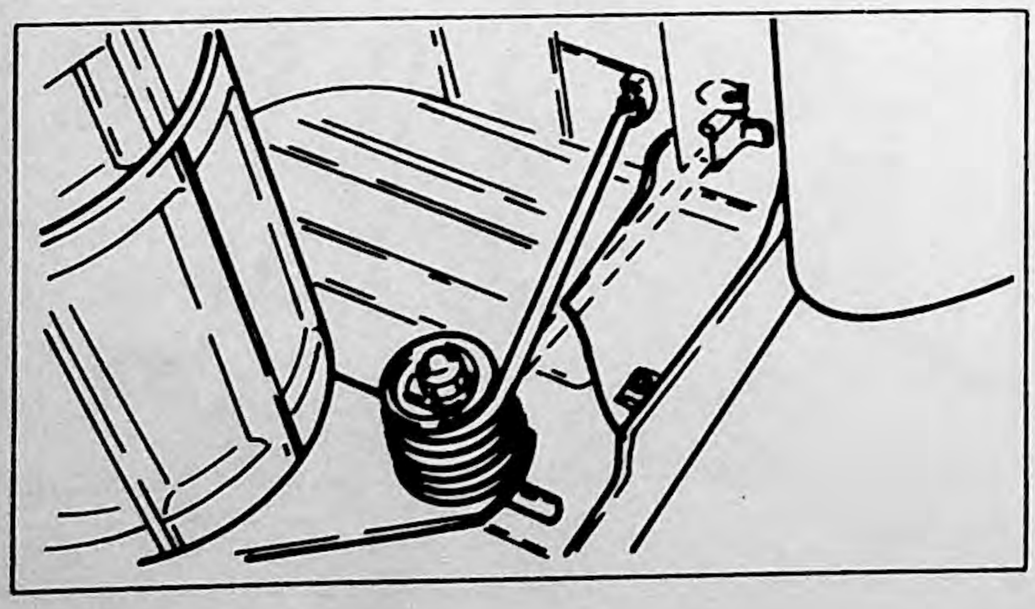

Fig. 3-53

Install the inside washer and plain washer, and secure the rear pivot screw with the nut. After tightening the nut, lock the nut with the cotter pin.

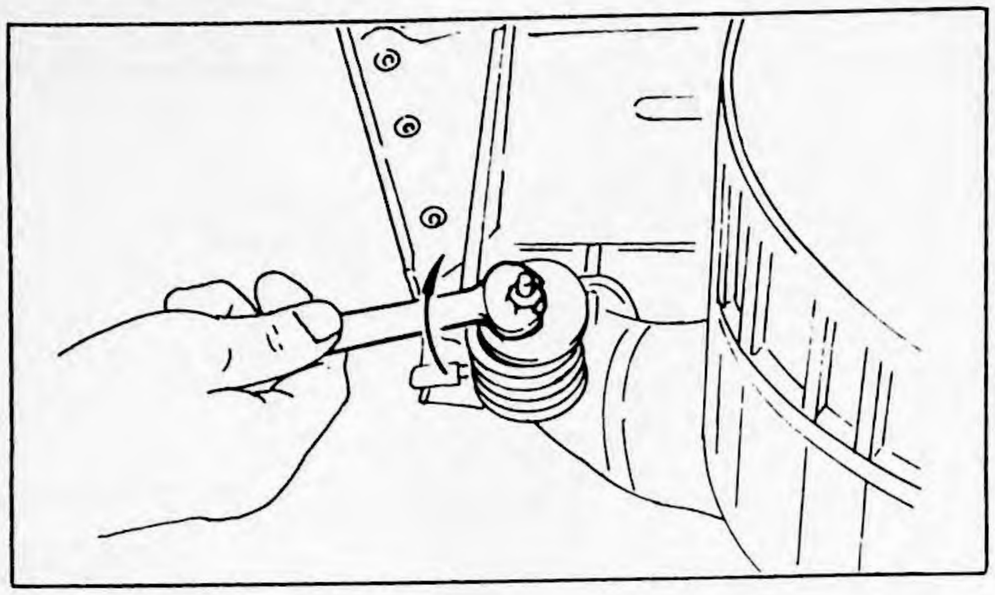

Fig. 3-54

3–7 TRACK REMOVAL

3–7–1

The front axle, rear axle, and bogie wheel assemblies must be taken out of the chassis in order to remove the track. The track can then be lifted out of the chassis.

3–7–2

If the center link plate of the drive track comes off the sprocket, the drive track rubber will be quickly worn due to contacts between the rubber and the sprocket. Therefore, the drive track should be checked frequently.

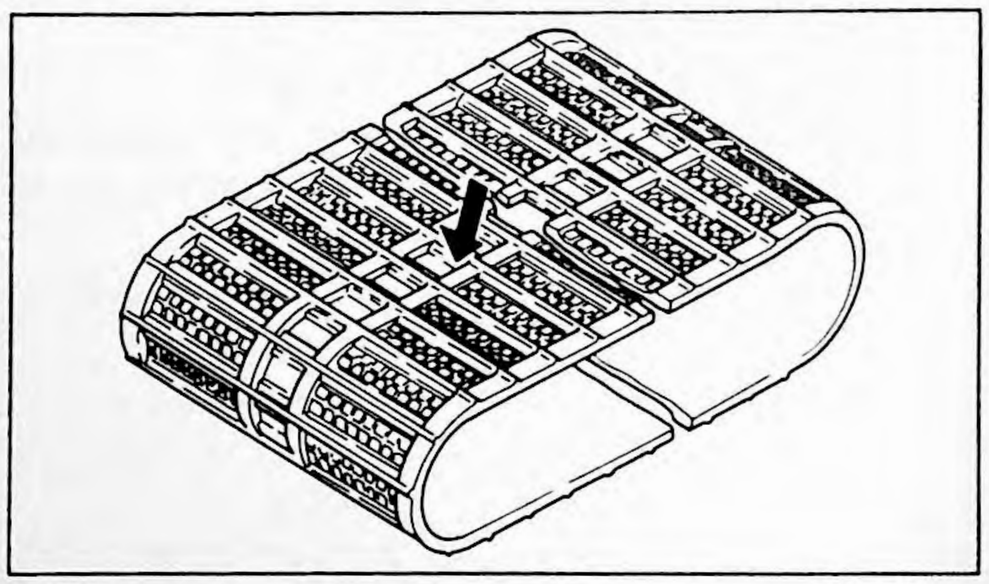

Fig. 3-55

3–7–3

When fitting the center link plate to the drive track rubber, it is advisable to use special jigs for easy and accurate work. Position the B position (of the jig) inside the track and the A portion outside the track. Install the two bolts in the B through the A and C jigs, and tighten them. Then, tighten the center bolt.

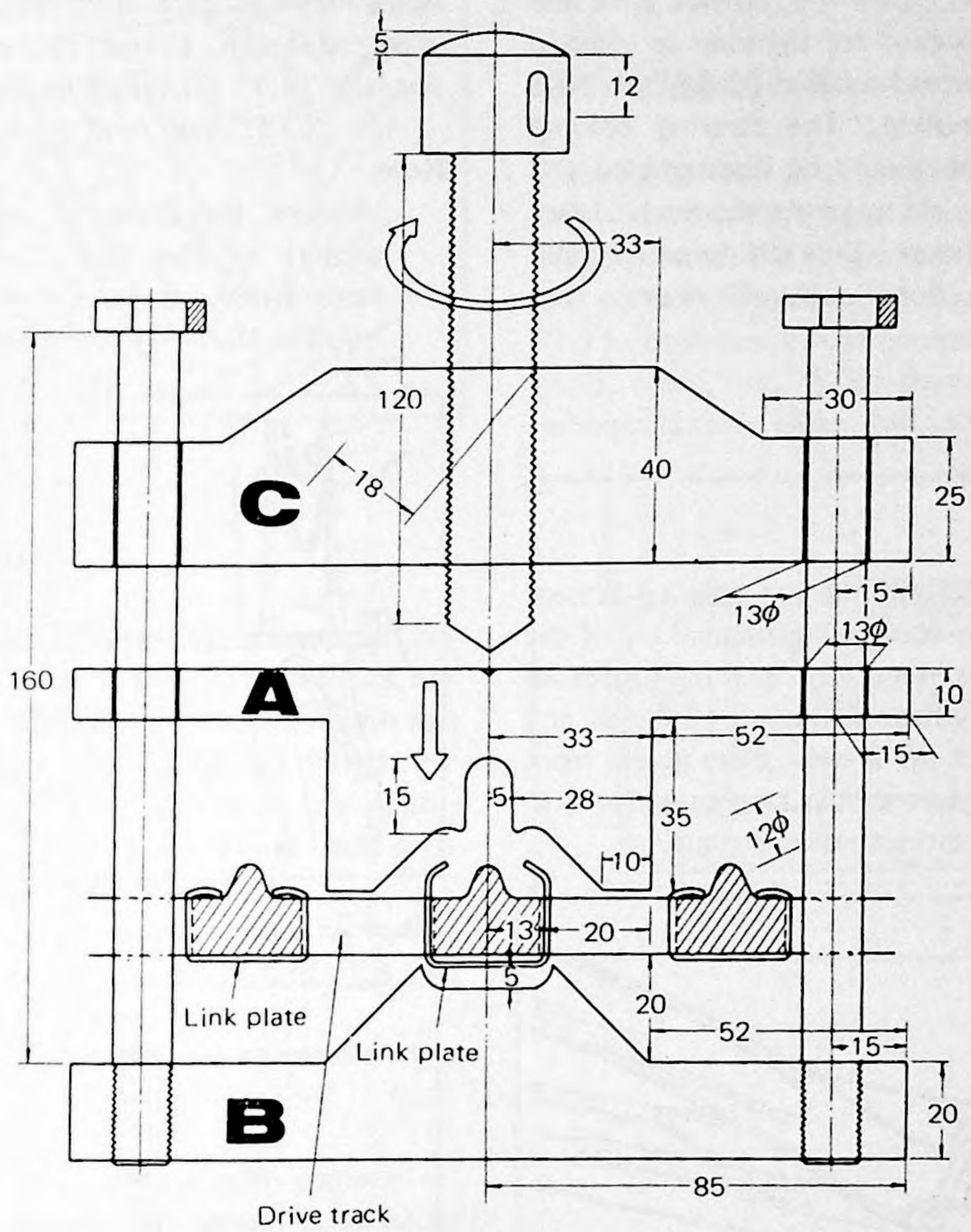

Fig. 3-56

CHAPTER 4. STEERING (SKIS) AND CHASSIS

4–1 STEERING

1. Maintenance

The steering column support, relay rod, outside arms and ski columns should all be checked for tightness as often as possible. Loosening and excessive wear of any of these items can cause poor handling. The steering column support on the steering gate should be disassembled and lubricated periodically. The ski columns should be lubricated with grease every 20 hours. Lubrication of all other steering linkage should be done every 40 hours. (See lubrication chart.)

4–2 SKIS

1. Maintenance

Tightness of the steering column to the steering linkage system is very important in controlling parallelism of the skis while the snowmobile is in motion. Skis are supported on 5 leaf springs that are pivotted at the rear of the ski and free to expand and contract on a wear plate at the front part of the ski. This wear plate should be greased often to reduce friction between the spring and wear plate.

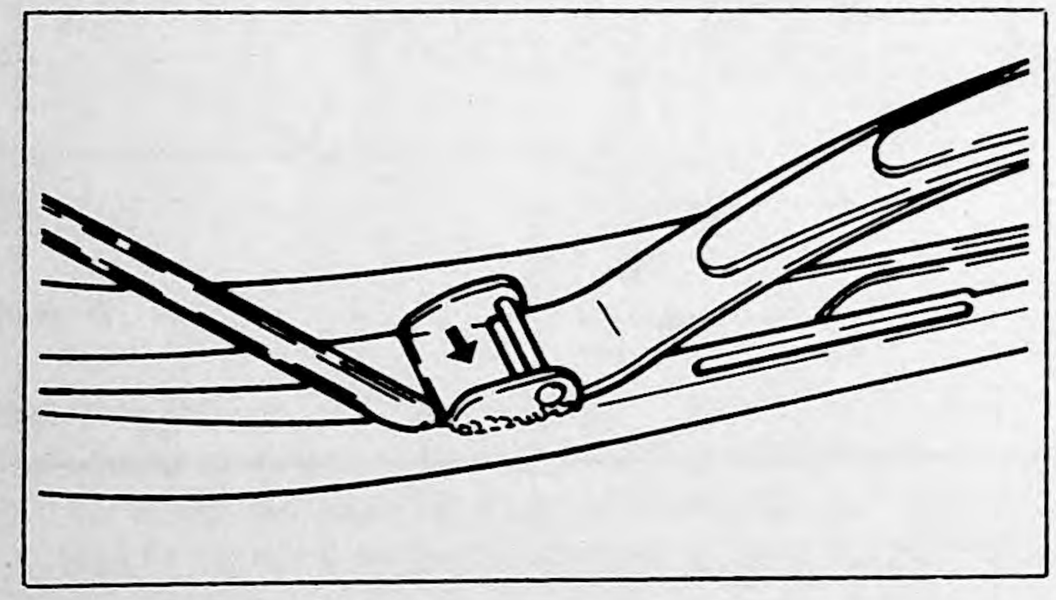

Fig. 4-1

2. Ski Parallelism

Parallelism of the skis is checked by measuring from center to center (outside of one ski to inside of other ski).

Adjustment of parallelism accomplished by adjusting the relay rod length. Correct center to center distance A of the skis is: 24.1" (613 mm) for the 15 in Track Model
27.1" (690 mm) for the 18 in Track Model

Note:

Measure the distance between the skis (center to center) at the front ends and at the rear ends respectively. If the difference of the value measured exceeds ±0.4" (±10 mm), adjustment is required.

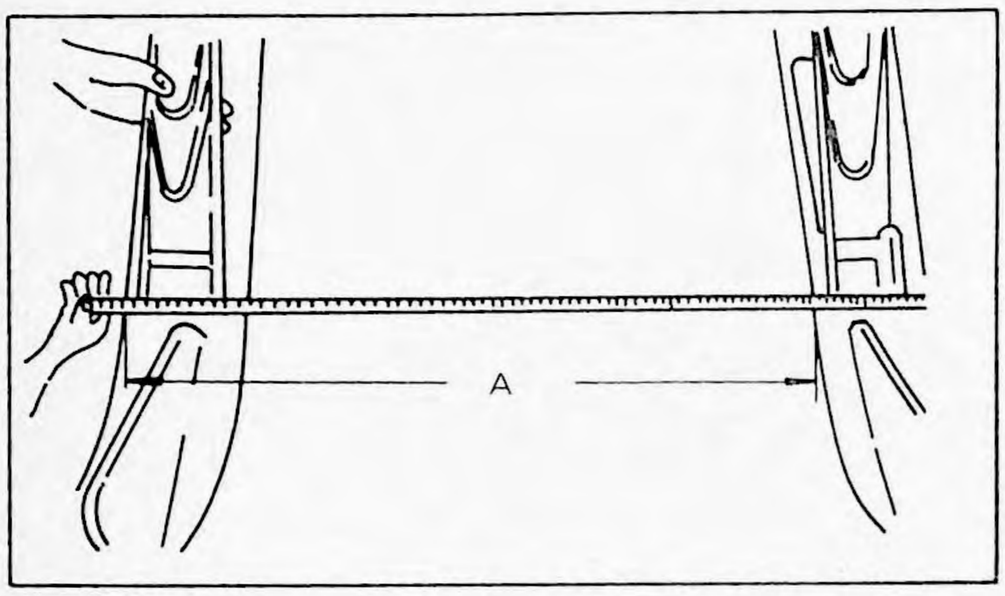

Fig. 4-2

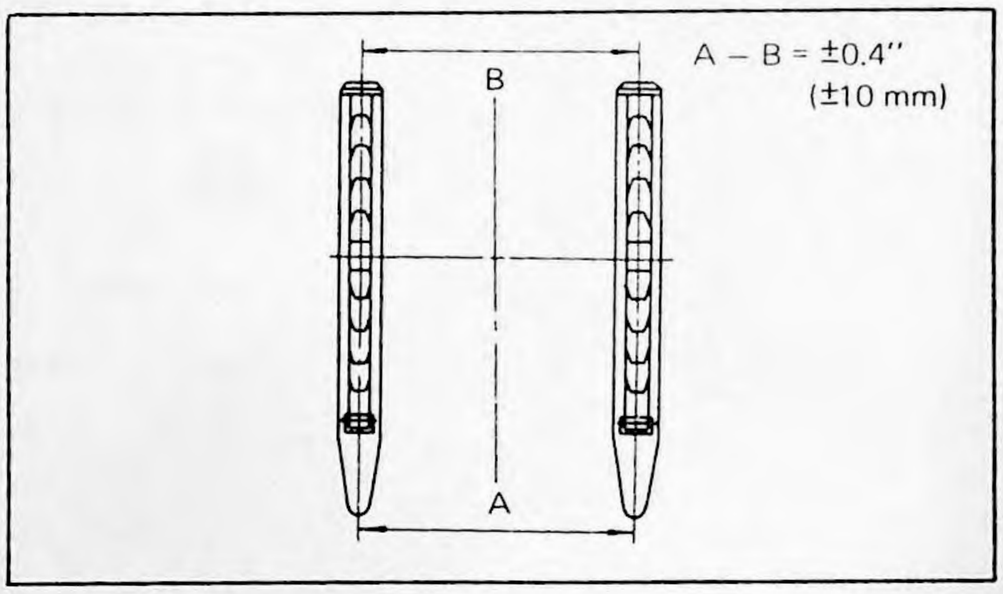

Fig. 4-3

The proper distance from center of the skis is shown above. To obtain this measurement place a ruler as shown in Fig. 4-3 above and adjust the relay rod as shown in Fig. 4-4.

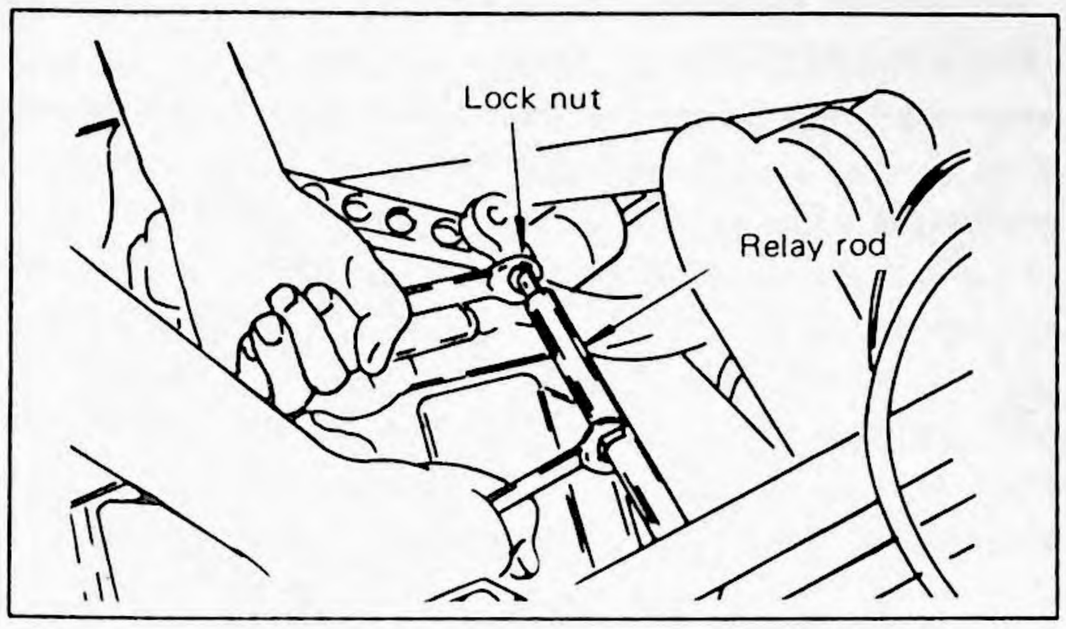

Fig. 4-4

4–3 CHASSIS AND SHROUD

Description – The chassis is of a monocoque design. It is a single unit stamped steel frame. Checking the chassis for corrosion and rust is very important to insure strength and reliability. If any corrosion or rust spots are found, the area should be sanded and painted with a rust proof paint. Any welded and formed parts of the frame should be checked periodically for cracking or breaking.
When the machine is stored, the chassis should be coated with a film of oil or light grease to prevent corrosion and rust.
The shround is painted fiberglass and should require little maintenance. Checking for cracking will insure it from serious damage.
The windshield is dear PVC and should require no maintenance. When it is cleaned, you should attempt to wash off any dirt or mud first and then wipe it off. This will keep scratches to a minimum.

4–4 SEAT

The seat is a single unit of foam chips covered with vinyl. If the machine is allowed to sit outside for any period of time, the seat can be removed to prevent weathering by unsnapping the cover from the chassis.

4–5 LUGGAGE BOX

The luggage box in the engine room is made of a glassfiber and secured with five pan head screws.
As illustrated, the longer screw is used for position marked #1, while the shorter one is for #2.
The luggage box should be used for storing spare oil, service tools, ropes, etc. Avoid storing such a thing as to cause a serious accident when the machine runs against something.

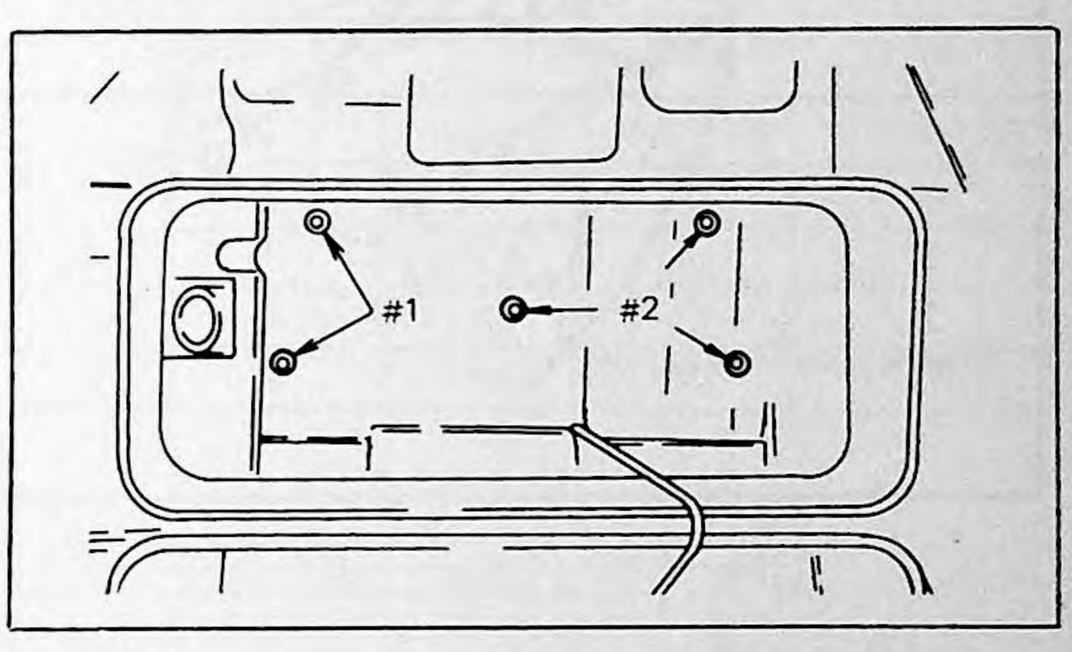

Fig. 4-5

CHAPTER 5. TIGHTENING BOLTS AND NUTS

The snowmobile tends to bounce up and down on rough snow-covered terrain, causing bolts and nuts to loosen.

In particular, the bolts and nuts as illustrated below should be carefully tightened and locked with a bond, when the machine is serveced.

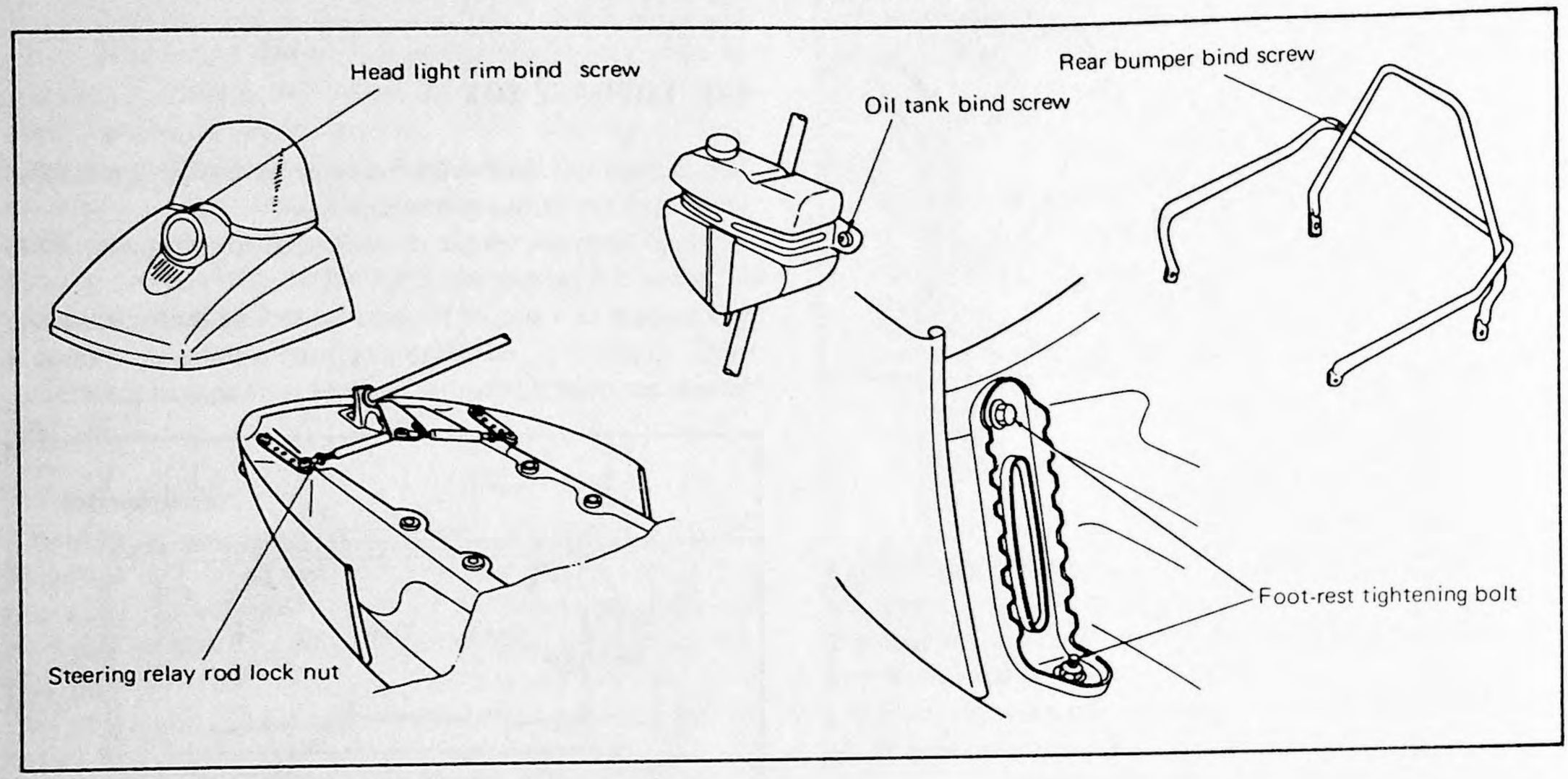

Fig. 5-1

CHAPTER 6. ELECTRICAL

6–1 IGNITION SYSTEM

Current for the ignition system is provided by the magneto assembly. The magneto assembly consists of the magnetized rotating flywheel and the primary source coils (attached to the magneto backing plate). The action of the rotating flywheel generates a low voltage primary current in the primary source coils. This current is timed, by the opening and closing of the ignition points, to pass to the secondary (high voltage) coils at the correct moment. The secondary coils convert the primary voltage into high voltage current and deliver it through the high tension leads to the spark plugs.

6–2 LIGHTING SYSTEM

Lighting current is generated in a similar manner by the lighting coil located on the point plate. The lighting system is of a balanced output type design for the headlight and taillight. Overloading of the lighting system by adding on lighting equipment is not recommended. Because the lighting system is of a balanced output type, burning out of either the headlight or taillight can result in a heavy surge of electricity being forced to the remaining light bulb. The remaining bulb can also burn out because of this surge.

6–3 WIRING CIRCUIT

Models SW433C, SL338D, SL433B

	Gy-O	G-Br	R-Y-L-Br	R-G/W-L-Br
OFF	O	X	X	X
1	X	O	X	X
2	X	X	O	X
3	X	X	X	O

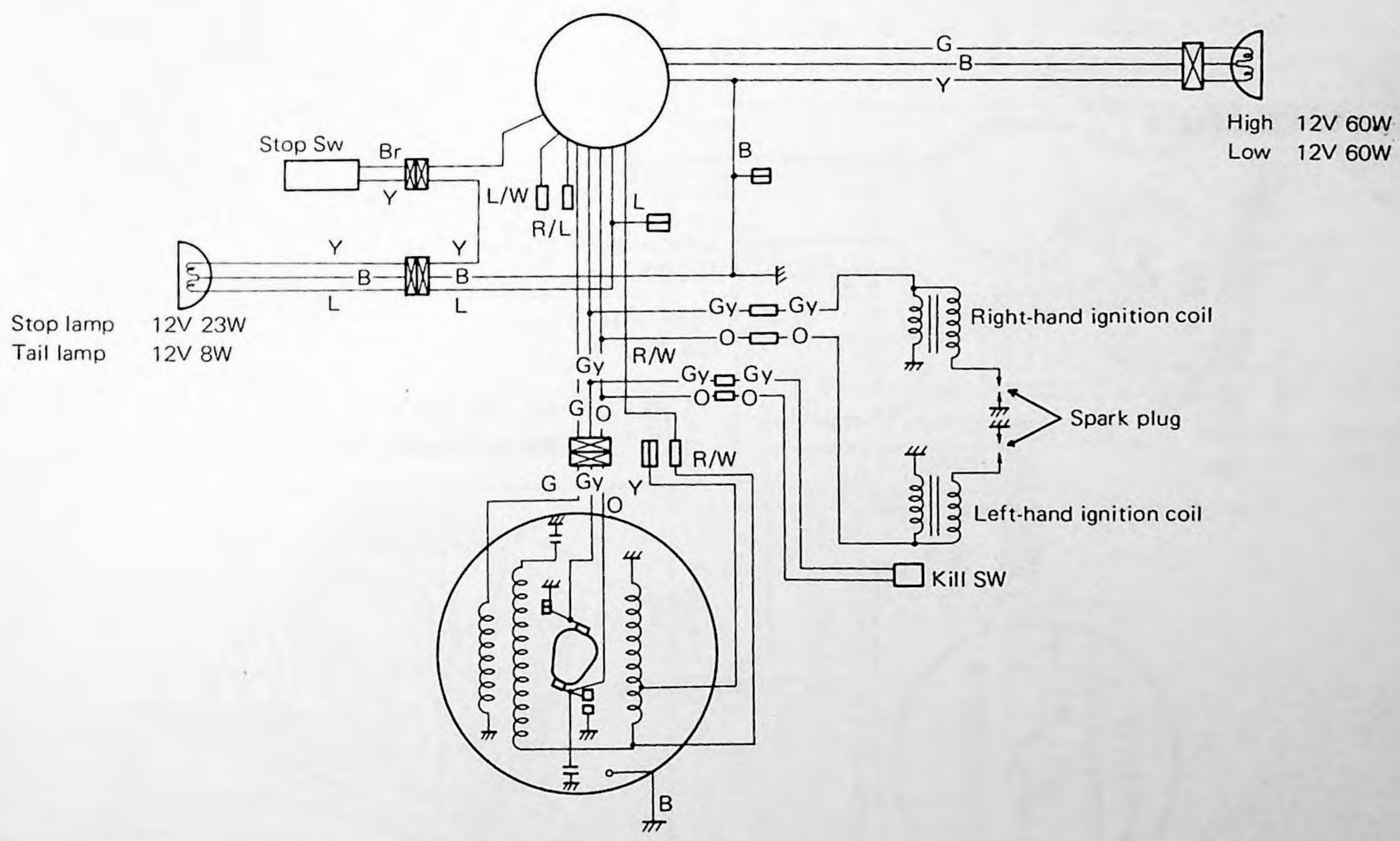

Fig. 6-1

Models EW433C, EL433B

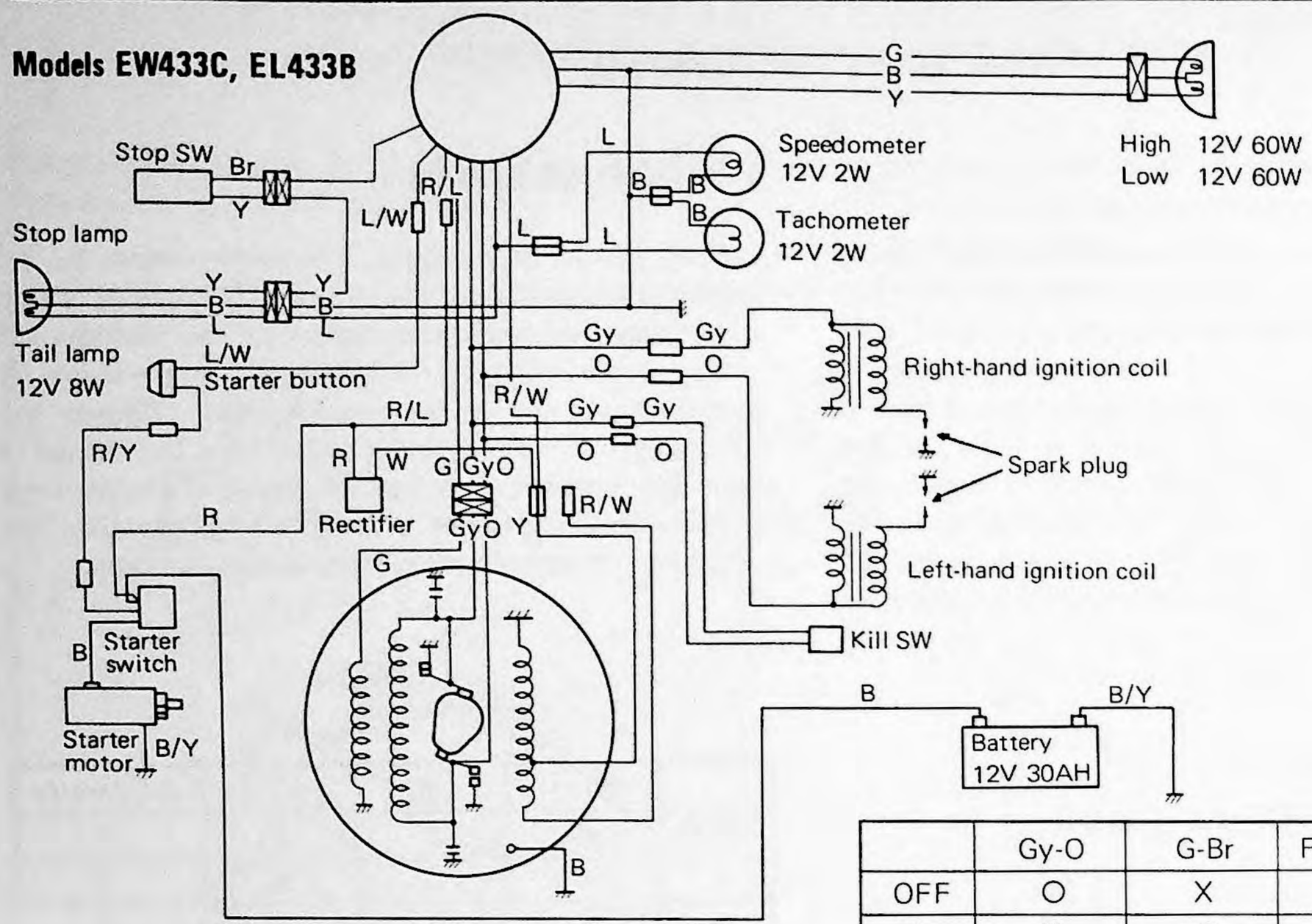

	Gy-O	G-Br	R-Y-L-Br	R-G/W-L-Br
OFF	O	X	X	X
1	X	O	X	X
2	X	X	O	X
3	X	X	X	O

Fig. 6-2

Models GP338, GP433B

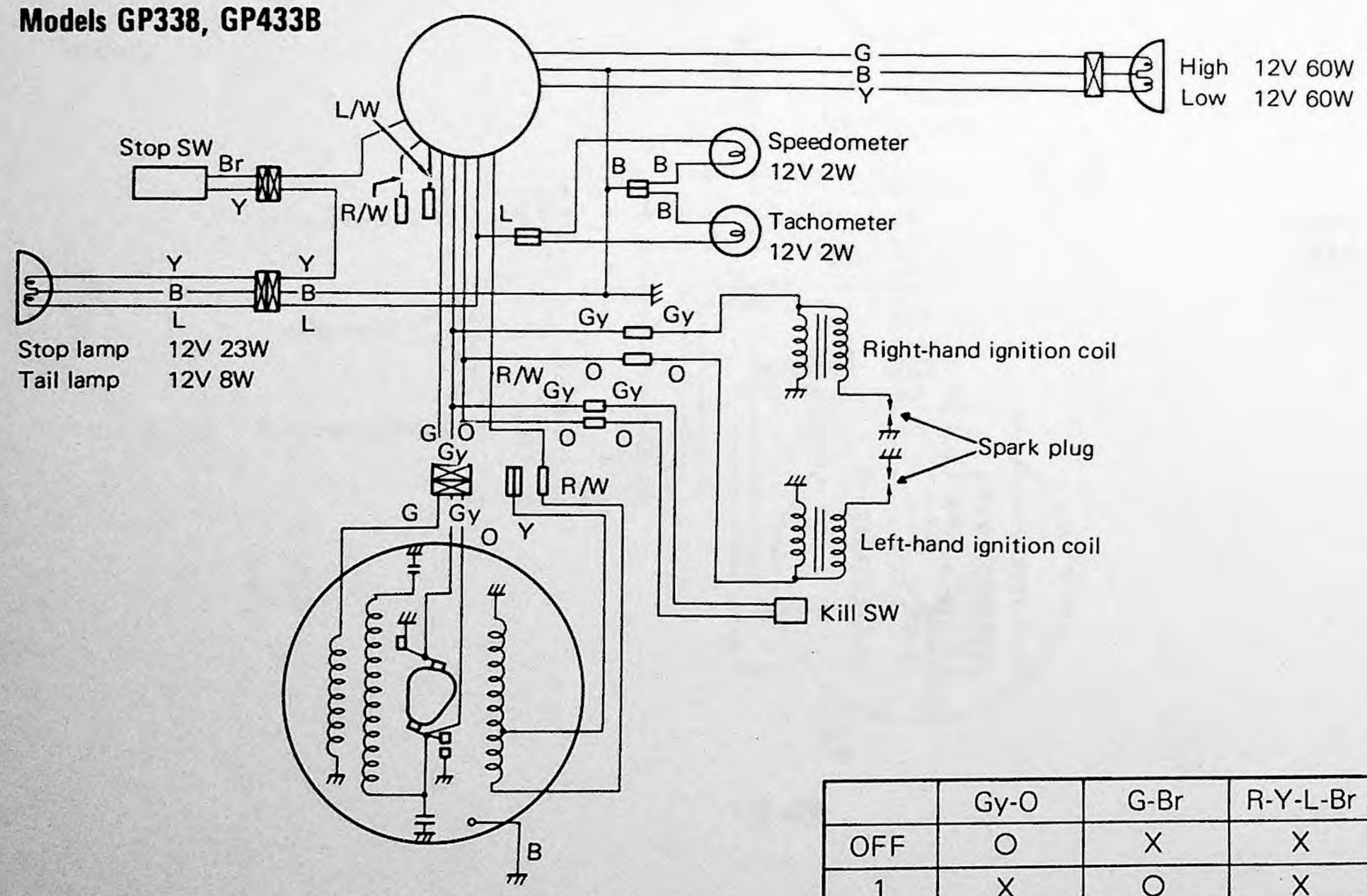

	Gy-O	G-Br	R-Y-L-Br	R-G/W-L-Br
OFF	O	X	X	X
1	X	O	X	X
2	X	X	O	X
3	X	X	X	O

Fig. 6-3

CHAPTER 7. ENGINE MAINTENANCE

7–1 IGNITION TIMING

7–1–1

Ignition timing is most accurately set with a point checker and a dial gauge.
It is necessary to set the ignition timing at a specified position ±0.1 mm BTDC.
If the ignition timing is found to be ±0.25 mm off the specified position, it must be corrected.

7–1–2

The following procedures for setting ignition timing should be adhered to very closely:

a. Clean the points by letting them snap closed on a strip of business card that has been dipped in lacquer thinner. The card should then be drawn from between the points to remove residue. Repeat this procedure until the points are clean.

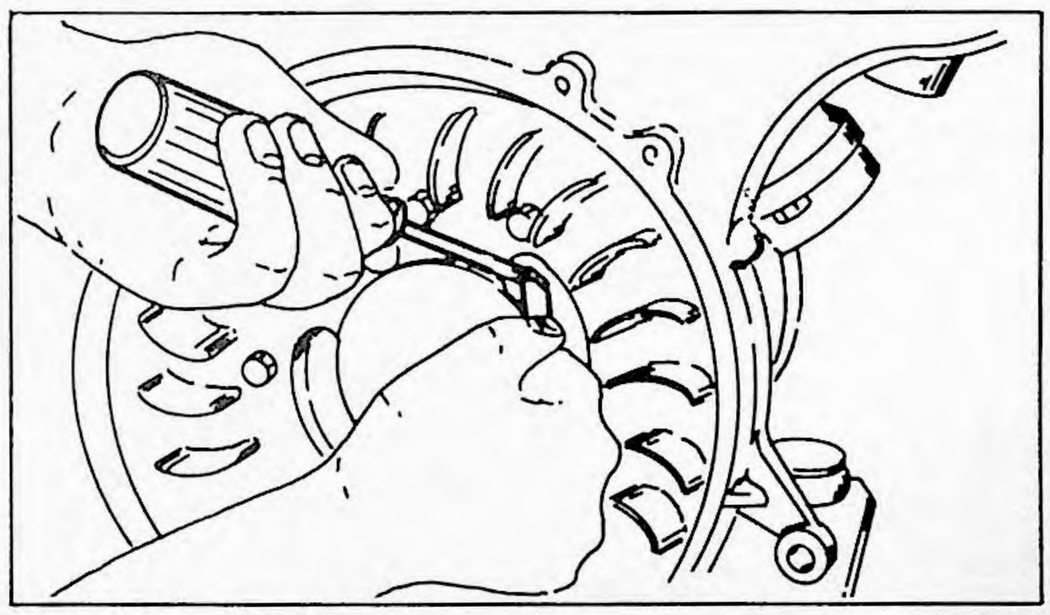

Fig. 7-1

b. Remove the spark plugs and install the dial indicator and adaptor into the right-hand cylinder head.

Fig. 7-2

c. Remove the connector from the four lead wires – gray, orange, black and green – of the flywheel magneto, and connect the point checker's red lead wire to the flywheel magneto's gray lead wire.
Then, ground the point checker's black lead wire to the cylinder or the frame.

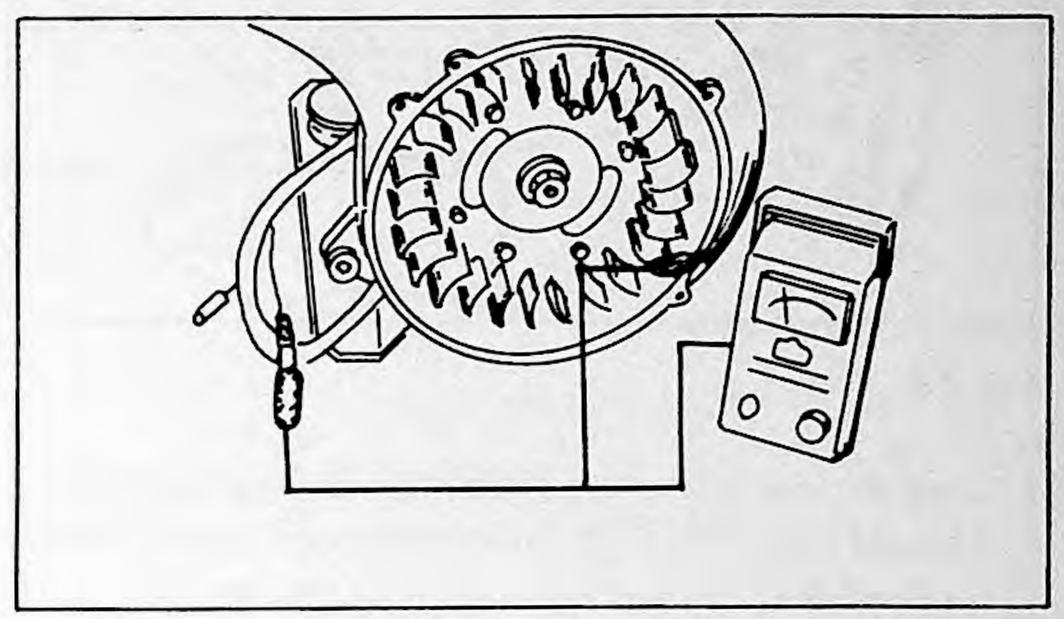

Fug. 7-3

d. Rotate the crankshaft until the dial indicator shows the piston to be at top dead center. This is the point where the needle hesitates just before it reverses direction. Set the "0" reading on the face on the dial to correspond with needle position at this point.

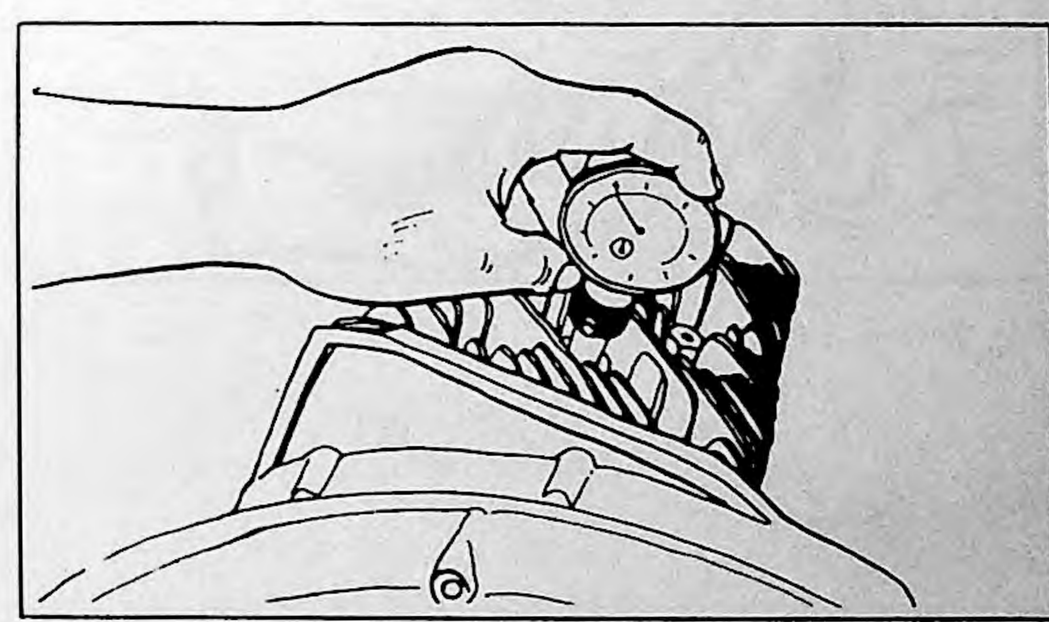

Fig. 7-4

e. With the piston at top dead center, rotate the crankshaft backwards until the dial indicator reads 1.8 mm before top dead center.

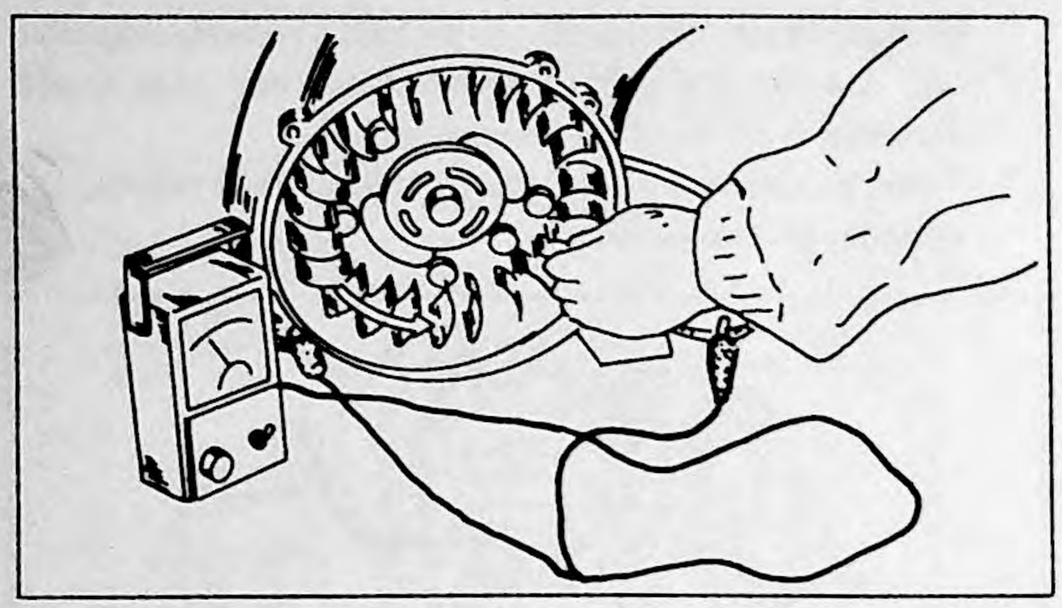

Fig. 7-5

f. Adjust the points by loosening the point securing screws and moving the point adjustment with a slotted screwdriver. Set the adjustment so that the points are just opening at 1.8 mm BTDC.

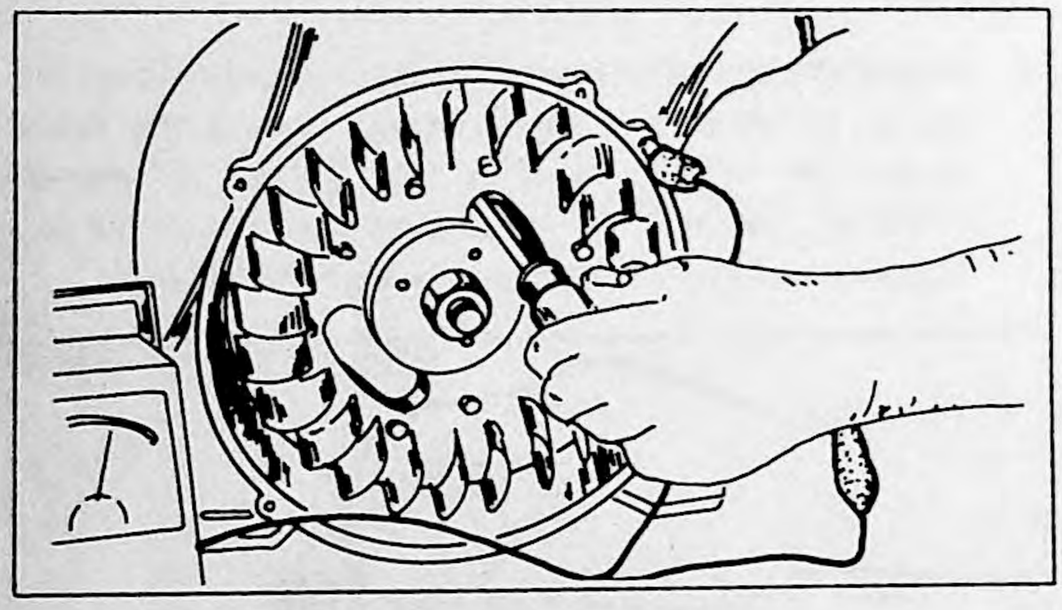

Fig. 7-6

g. Tighten the securing screws and recheck the timing.

h. Repeat the above procedure for the left-hand cylinder and left-hand set of points. The left-hand primary ignition wire is orange in color.

i. There is only one point adjustment on the AC magneto when the timing has been adjusted correctly the point gap will also be correct.

When the mark on the flywheel magneto aligns with each of both right and left timing marks on the stator, the piston heads are positioned 1.8 mm BTDC, respectively.

When the mark on the flywheel magneto aligns with the pointer on the dinamo stator, a spark takes place (with the advanced ignition timing).

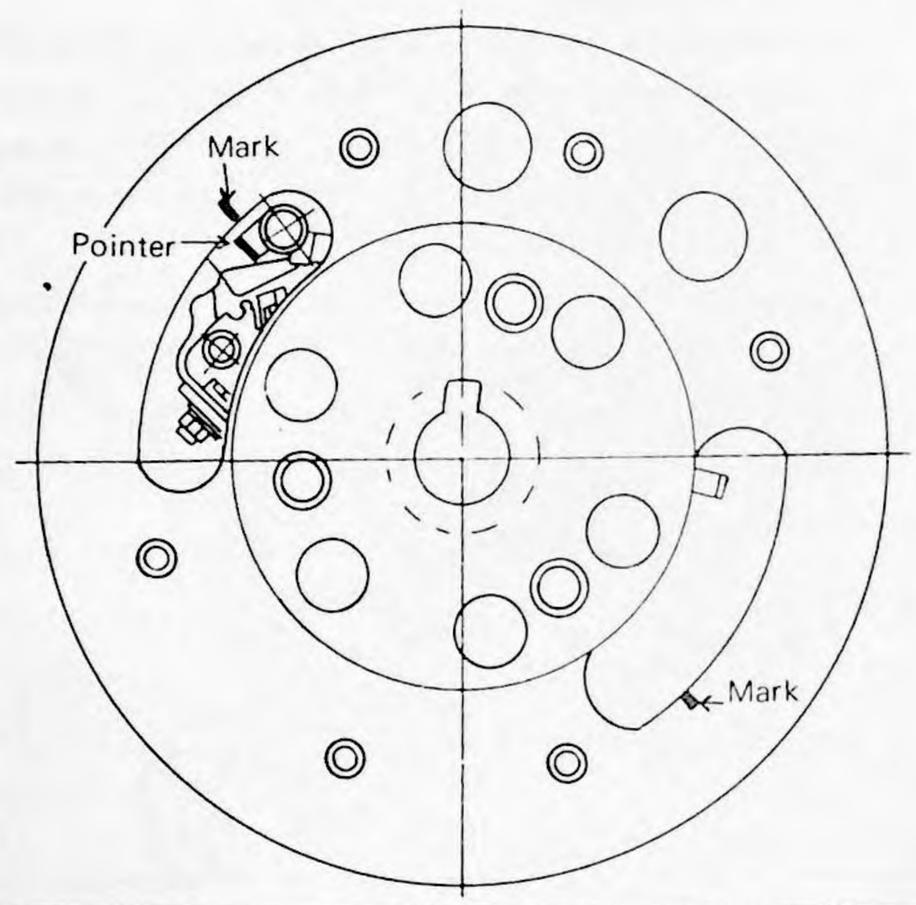

Fig. 7-7

7–2 CARBURETION AND FUEL SYSTEM

The SL338D, SL433B, EL433B, SW433C and EW433C are equipped with a KEIHIN diaphragm type carburetor CD42-38 (venturi bore 38 mm), the GP338 is with two KEIHIN diaphragm type carburetor CD38-30 (ventury bore 30 mm), and the GP433B is two KEIHIN diaphragm type carburetor CD38-32 (ventury bore 32 mm). (These carburetors are know as floatless type carburetors.)

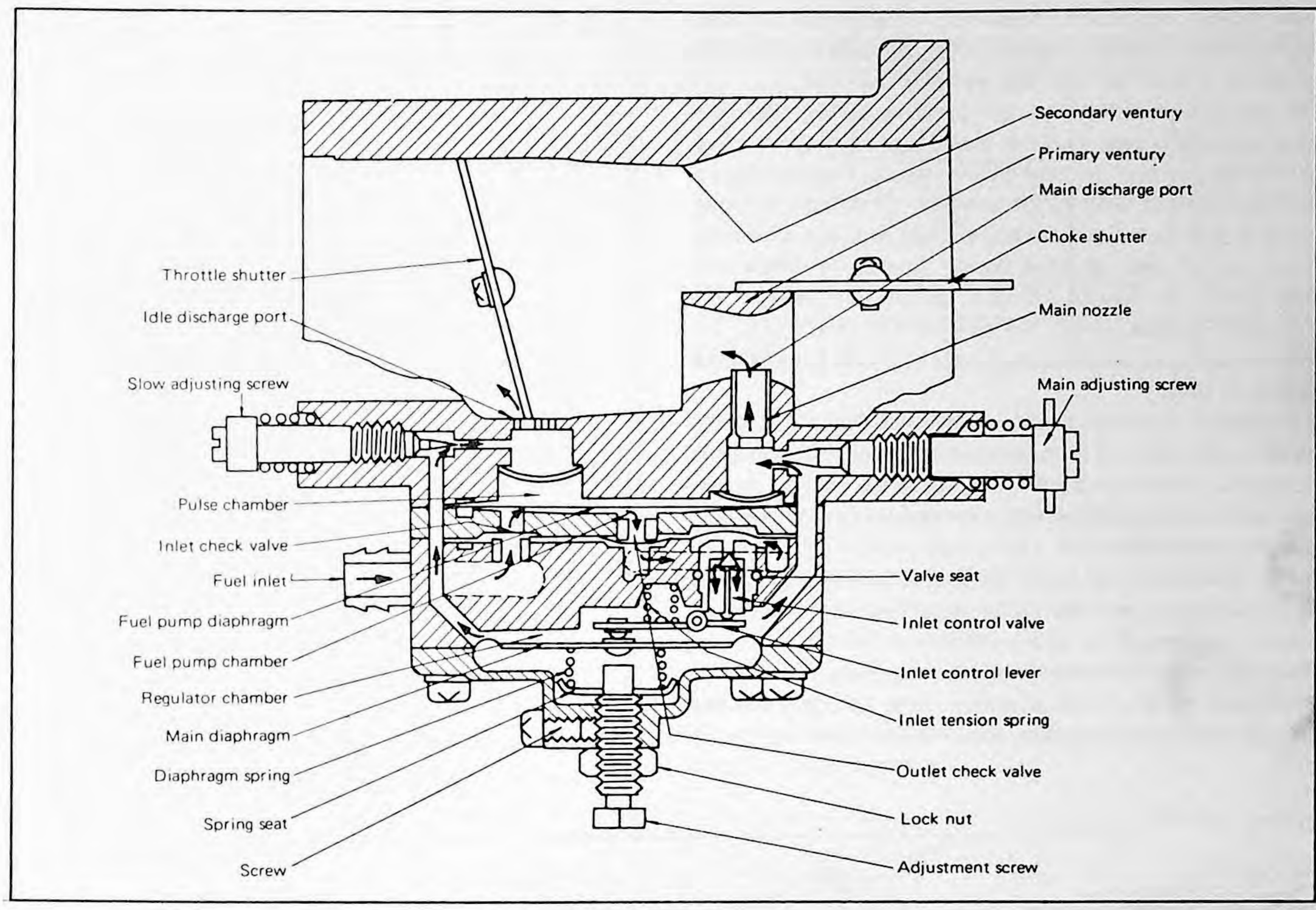

Fig. 7-8

The diaphragm carburetor draws the fuel at a proper rate from the fuel tank where the fuel is then metered to the engine according to fuel consumption in the engine.

The diaphragm type carburetor, adopted by Yamaha, has the following three main mechanisms:

1. Mixing body supplying an air-fuel mixture to the eninge.
2. Fuel pump drawing the fuel from the fuel tank to the carburetor.
3. Regulator maintaining the pump fuel pressure constant by reducing or increasing it in order to deliver a proper air-fuel mixture according to engine speed.

The regulator of the diaphragm type carburetor plays a role similar to the float of the float type carburetor. The fuel level in the float chamber is likened to the regulator internal pressure.

Accordingly, the regulator internal pressure must be kept at a constant level just as the fuel level of the float chamber type carburetor, because a proper air-fuel mixture must be supplied to the engine according to its requirements. To this end, the regulator internal pressure (difference between the regulator set fuel level and the main and idle discharge ports) must be optimum for feeding a proper air-fuel mixture.

For this reason, the above mentioned three main components are arranged as follows: The mixing body is provided with the fuel pump, and the regulator is positioned apart from the mixing body so that the regulator may maintain positive pressure. In addition, the regulator pressure setting is designed to be varied freely. The diaphragm for the fuel pump is made of thin stainless steel so that it quickly respondes to variations in engine speed. As a result, it may be said that the fuel pump is superior in discharge performance as well as in durability.

As the engine runs, the pulses which are generated in the crankcase are carried from the impulse port to the fuel

pump driving chamber, thus vibrating the fuel pump diaphragm. As a result, the fuel is drawn from the fuel tank, through the fuel pipe and inlet check valve, into the fuel pump chamber. Then, the fuel continues to flow through the outlet check valve and inlet control valve into the regulator chamber.

When the fuel flows into the regulator chamber, the main diaphragm is given a downward force, and at the same time, the diaphragm control lever is moved down at the one end and moved up at the other end. This causes the inlet control valve (needle) to move up to its closed position and stops the flow of fuel into the regulator chamber.

As the fuel level loweres, the pressure against the main diaphragm decreases and the main diaphragm spring overcomes the force of the inlet tension spring, thus pushing up the inlet control lever at the one end. This causes the inlet control lever to move down at the other end, and allows the inlet control valve to move down. At this movement, the fuel begins to flow in. This is, as the fuel lever in the regulator chamber lowers, the inlet control valve opens. On the contrary, as the fuel level rises, the inlet control valve begins to close.

In this way, the balance between the main diaphragm spring tension and the inlet tension spring tension maintains the fuel level constant, and the fuel is fed to the engine. At low speed, the fuel is drawn into the engine through the idle discharge port alone.

With 1/4 throttle or more, the fuel is drawn through the main discharge port and fully atomized in the primary venturi, being supplied to the engine.

The fuel is controlled by the slow adjusting screw at low speed and by the main adjusting screw at high speed at a proper rate according to fuel consumption in the engine.

7–2–1 To Remove the Carburetor

To remove the carburetor, disconnect fuel line, pressure pulse line, disconnect the pump operating rod and then loosen the carburetor from the cylinder.

Cleaning of the carburetor and any carburetor parts should be done in clean gasoline on solvent. After any dirt of film built-up has been removed, all parts should be blown off with an air hose.

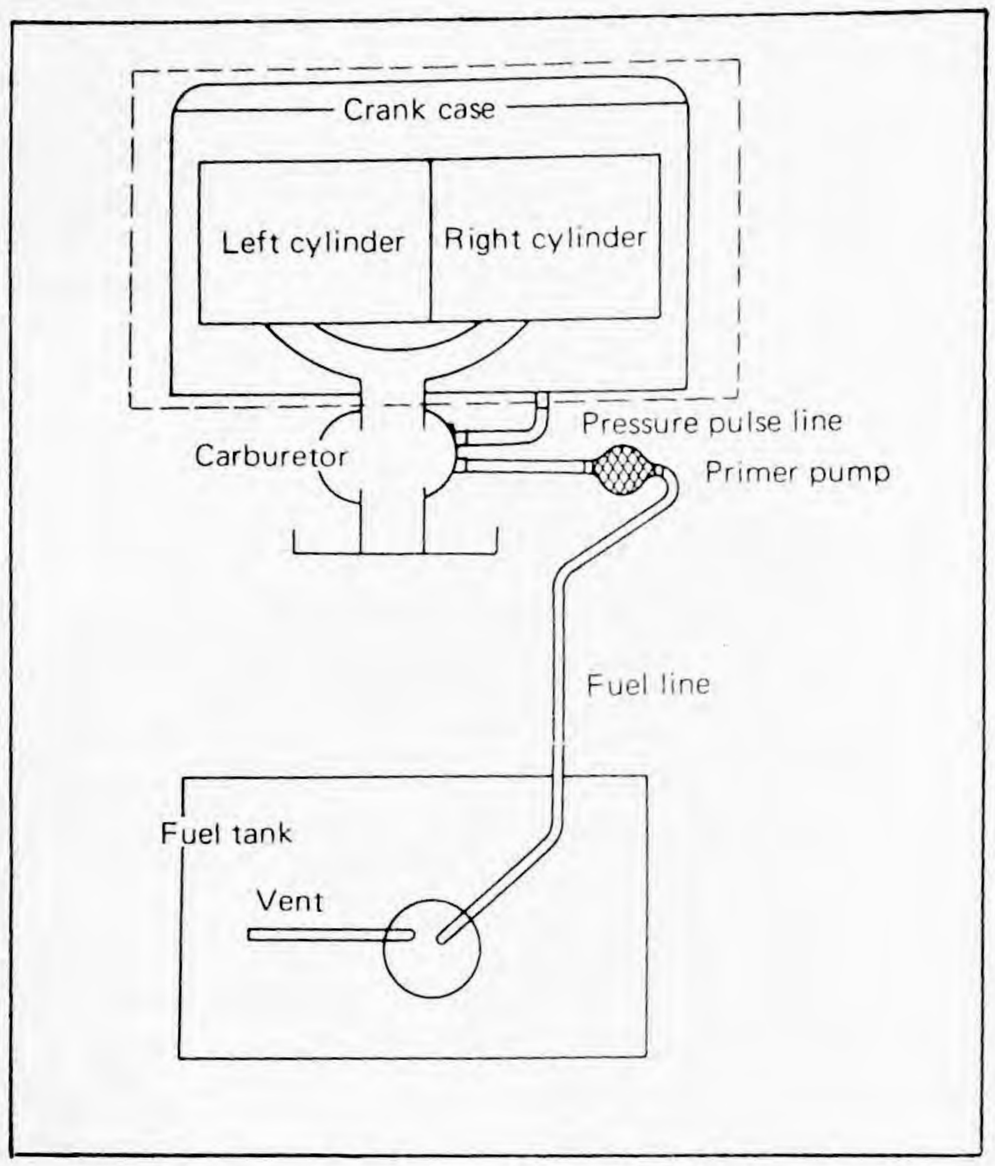

Fig. 7-9

7–2–2 Carburetor Setting

All carburetors are subject to strict testing before shipment. Therefore, no attempt to touch the adjusted points should be made unnecessarily, otherwise the performance of the carburetor will be impaired. If the carburetor is checked, cleaned, or disassembled for replacement of parts, or used under special atmospheric conditions, or at altitude, the following procedures must be followed with special care for readjustment. The adjustment points are three places as follows:

1. Slow adjusting screw controlling the mixture at idling speed.
2. Throttle stop screw (idle speed screw) controlling the idling speed.
3. Main adjusting screw controlling the air-fuel mixture while the throttle shutter is past 1/4 throttle.

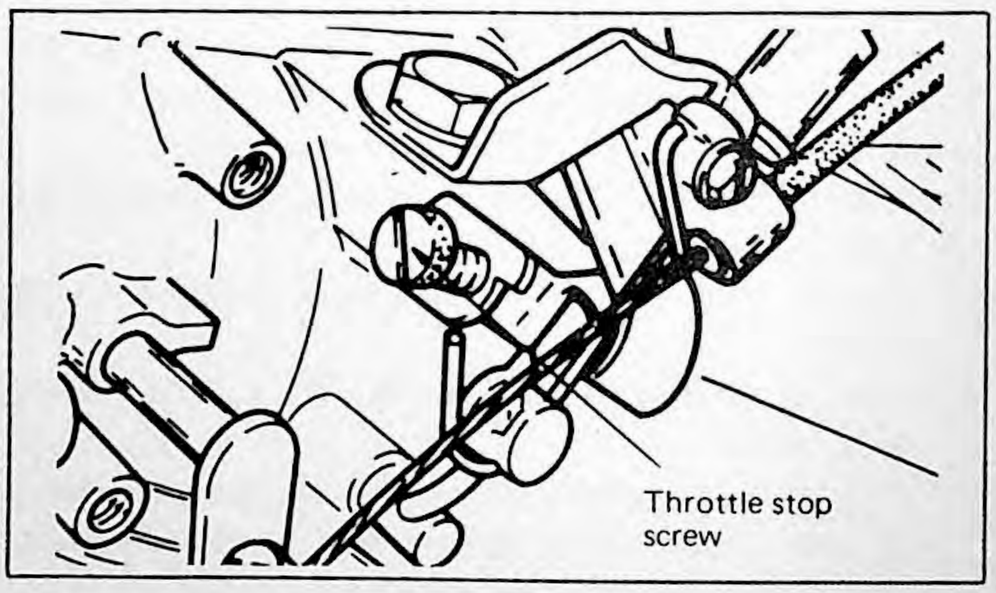

Fig. 7-10 Single carburetor

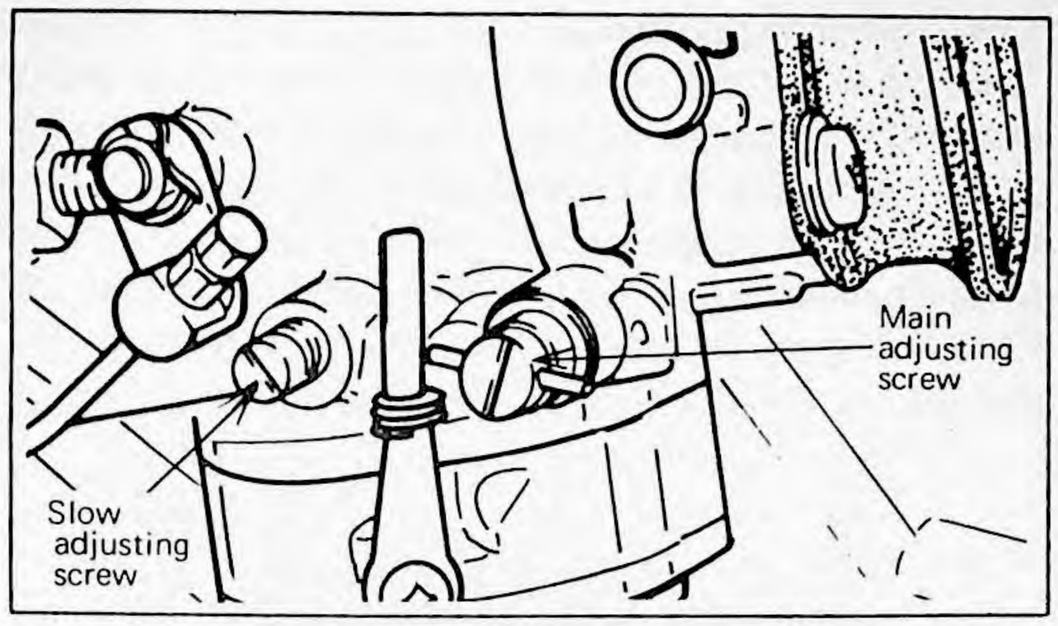

Fig. 7-11 Single carburetor

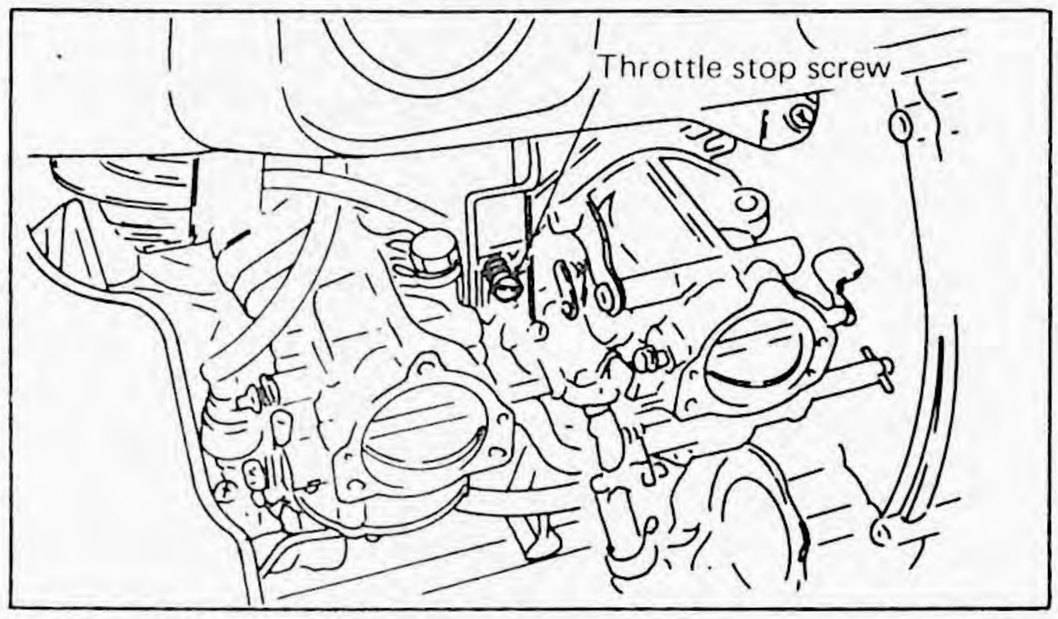

Fig. 7-12 Twin carburetor

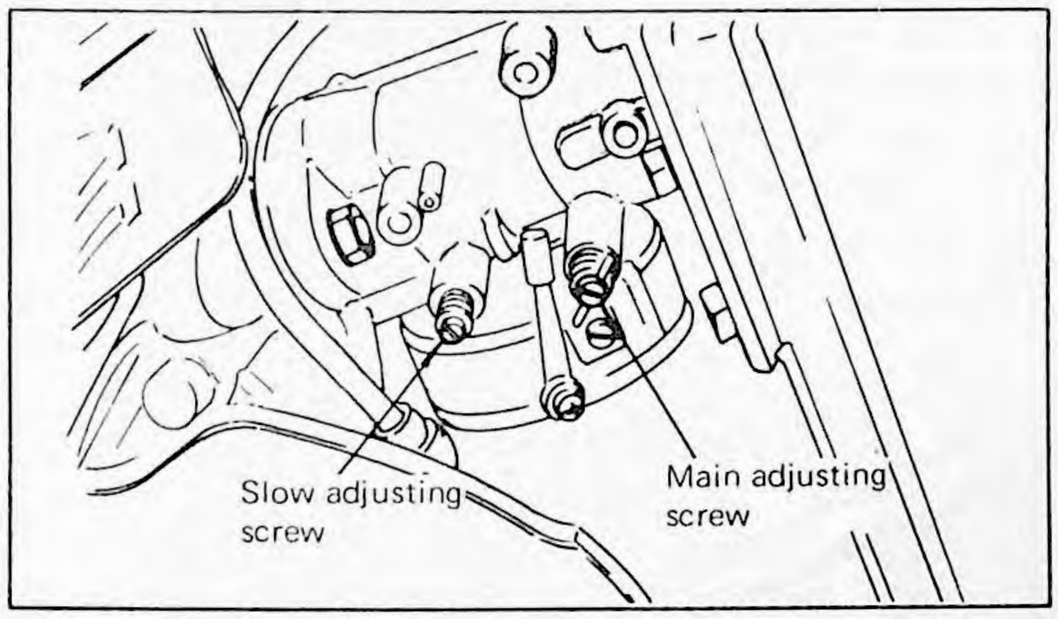

Fig. 7-13 Twin carburetor (left-hand side)

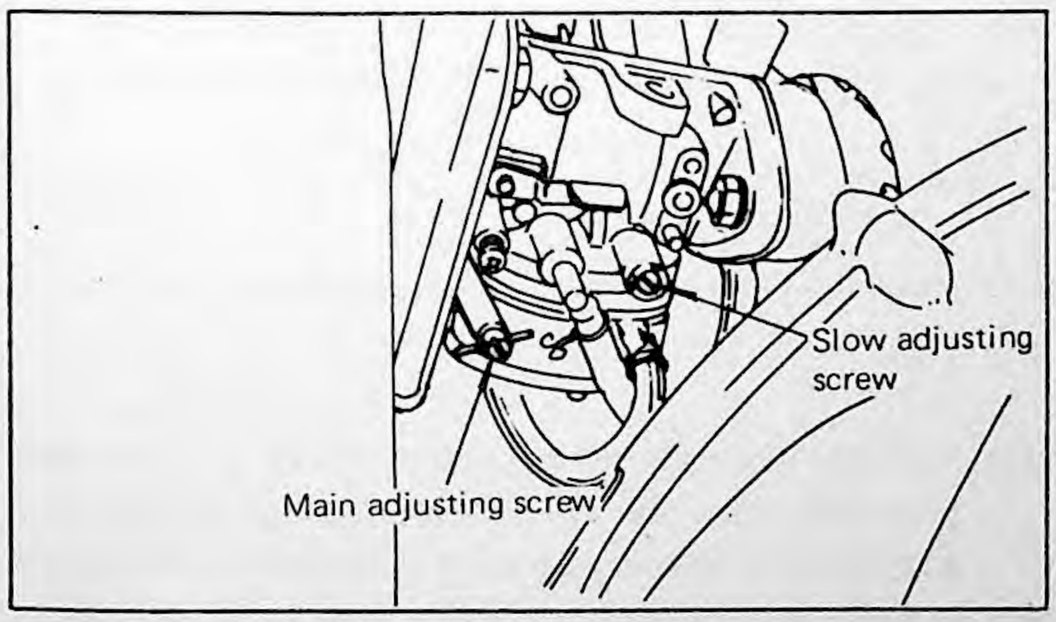

Fig. 7-14 Twin carburetor (right-hand side)

The setting is done with the consideration that the snowmobile is used in winter at low altitude. If the snowmobile is operated at high altitudes or under special atmospheric conditions, the specified setting may not be suitable. Accordingly, the carburetor may be readjusted so that its performance will be maximum.
The adjust screw should be turned out from a lightly seated position according to the following table.
Number of turns to be backed off: (See following table)

	Slow Adjusting Screw	Main Adjusting Screw
SW433C	–	–
SL433B	1	1-3/8
EL433B	1	1-3/8
EW433C	7/8	1-1/8
GP433B	–	–
SL338D	–	–
GP338	–	–

7–2–3 Fuel Level Adjustment

The Keihin carburetor is provided with a level pipe which is used for fuel level adjustment. When adjusting the fuel level, remove the level pipe cap and start the engine. Keep the engine speed at idling speed, and the gasoline will rise up to the specified fuel level.
If the fuel level is not in this range, loosen the fuel level adjust screw lock nut, and adjust the fuel level by turning in and out the fuel level adjusting screw, located on the bottom of the carburetor.

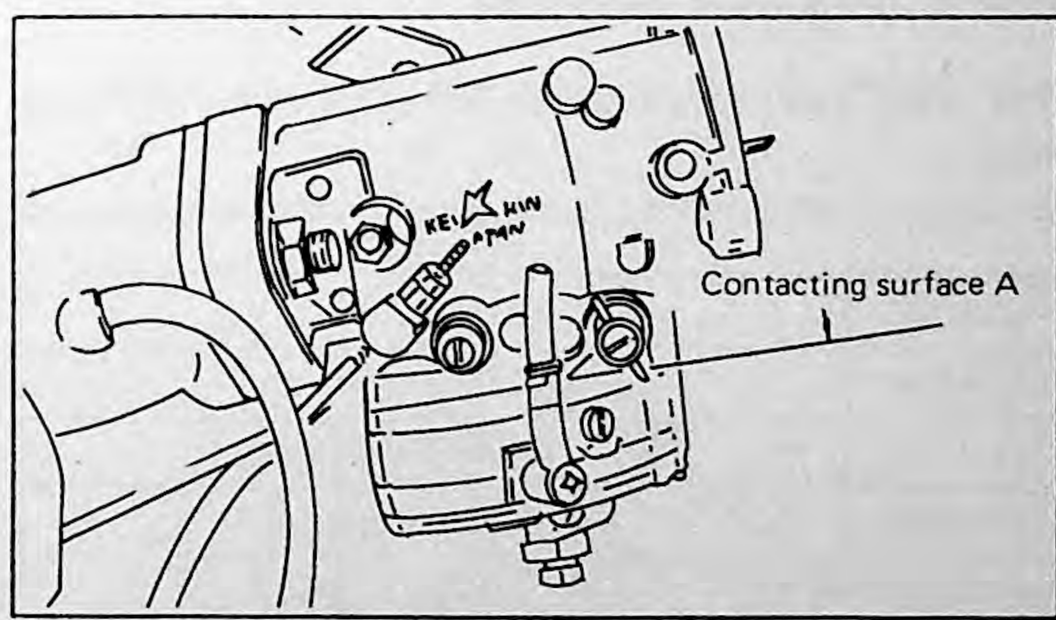

Fig. 7-15

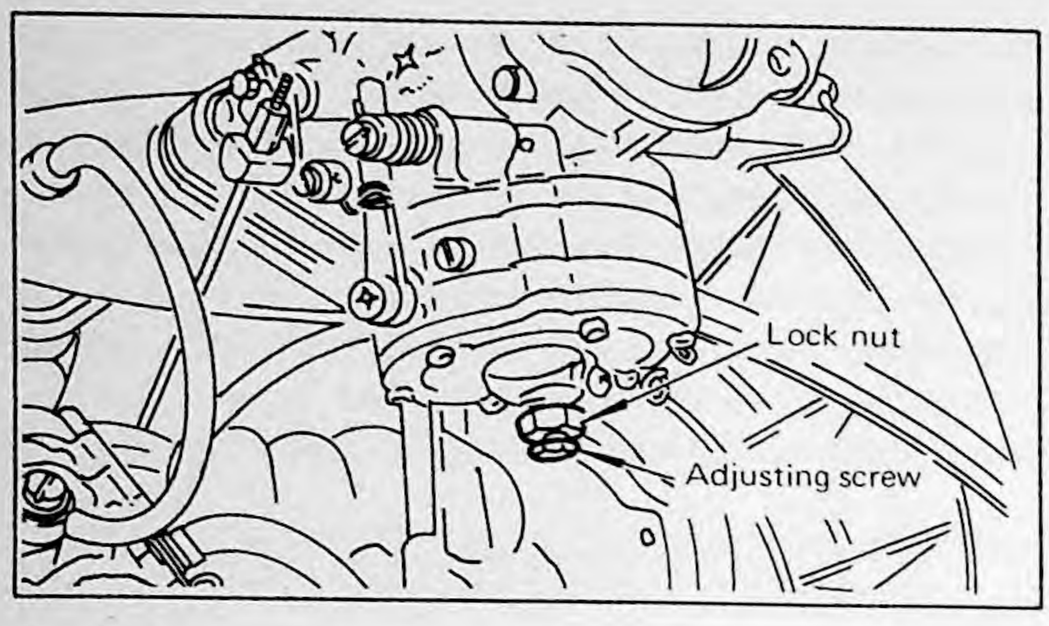

Fig. 7-16

The fuel level varies from model to model. For details, refer to the table below.

(A is contacting surface)

SW433C	A^{+0}_{-10} mm ($A^{+0}_{-0.394}$ in)
SL338D	A^{+0}_{-10} mm ($A^{+0}_{-0.394}$ in)
SL433B	A^{+0}_{-10} mm ($A^{+0}_{-0.394}$ in)
EW433C	A^{+0}_{-10} mm ($A^{+0}_{-0.394}$ in)
EL433B	A^{+0}_{-10} mm ($A^{+0}_{-0.394}$ in)
GP433B	A^{+2}_{-5} mm ($A^{+0.078}_{-0.197}$ in)
GP338	A^{+2}_{-5} mm ($A^{+0.078}_{-0.197}$ in)

7–2–4 Idling Speed Adjustment

The idling speed should be set according to the following table.

	Idling r.p.m.
SW433C	1,800 r.p.m.
SL433B	1,800 r.p.m.
EL433B	1,800 r.p.m.
EW433C	1,800 r.p.m.
GP433B	2,200 r.p.m.
SL338D	1,800 r.p.m.
GP338	2,400 r.p.m.

For smooth idling, the slow adjusting screw must be correctly set so that an optimum fuel-air mixture may be fed to the engine. The setting of the slow adjusting screw will greatly affect the engine performance from starting to acceleration in the range of low and medium speeds.
Turn in or out the slow adjusting screw, and when the engine speed reaches its maximum, back out the screw 1/8 turn to enrich the mixture a little.
The final adjustment of idling speed is made by the throttle stop screw (idle speed screw). The throttle stop screw is closely related to the slow adjusting screw in the adjustment of idling speed. Their positions cause the engine speed to increase or decrease, but by turning in and out the throttle stop screw, the final adjustment should be done so that the engine may run idle at specified r.p.m.

7–2–5 Adjustment Sequence is as Follows: (In case of single carburetor)

(1) Back out the slow adjusting screw from a lightly seated position, at the same time, the setting of the main adjusting screw should be adjusted to factory recommended setting.

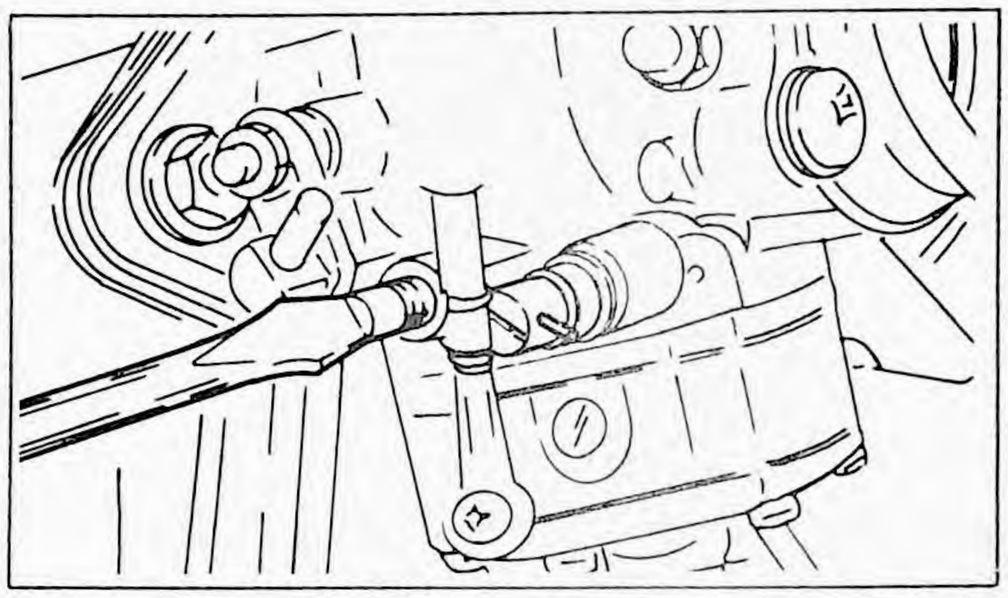

Fig. 7-17

(2) Start the engine and let it warm up.
(3) Increase the engine speed to specified r.p.m. by use of the throttle stop screw.

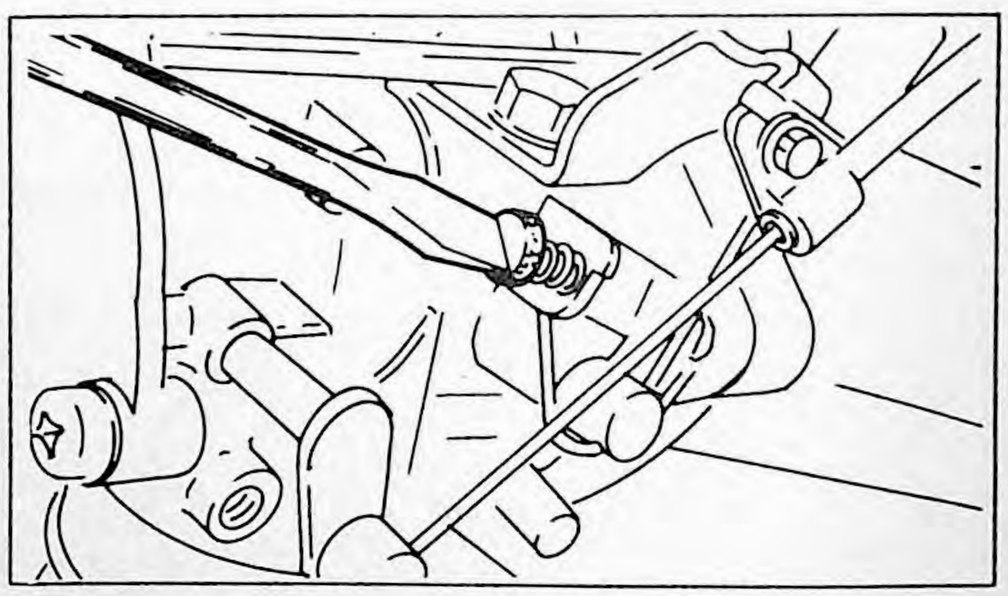

Fig. 7-18

(4) Turn the slow adjusting screw in or out 1/8 turn each time and when the idling speed reaches its maximum and becomes stable, stop turning the screw. Adjust the throttle stop screw once again, and set it so that the engine idle at specified r.p.m.
(5) Back off the slow adjusting screw 1/8 turn.

7–2–6 Main Adjuster Adjustment:

The main adjusting-screw is used to adjust the air-fuel mixture when the snowmobile runs at high-speed. Adjustment should be made so that the mixture becomes as rich as possible, provided that the engine still runs smoothly. (This is necessary to prevent engine overheating.)

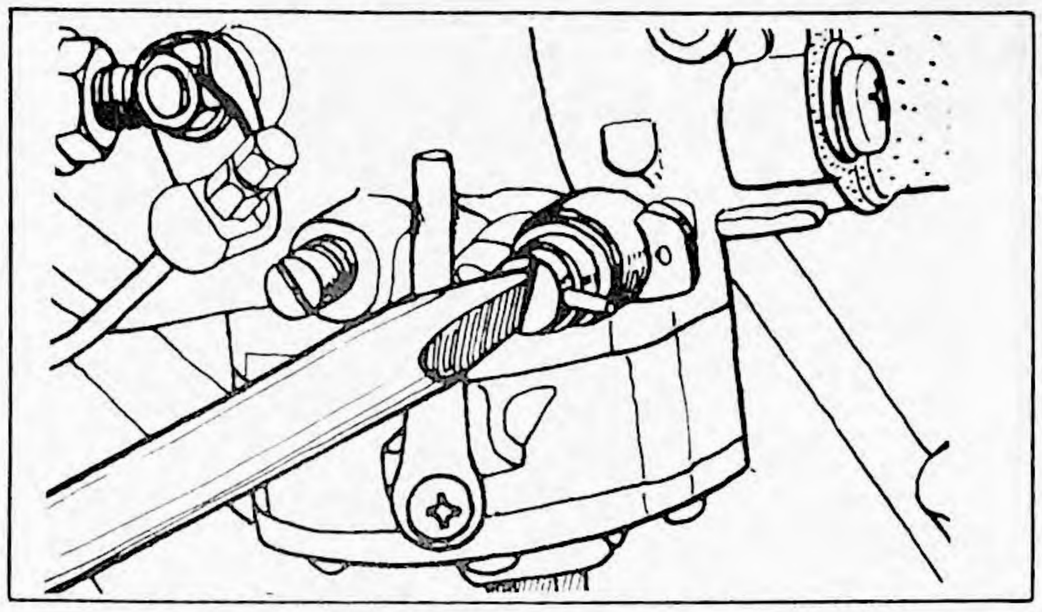

Fig. 7-19

For adjustment, follow the following steps:

1. First, back out the main adjusting screw as specified.
2. To adjust the main adjusting screws, run the snowmobile at high-speed and find the range of setting positions (number of turns out) at which the engine runs cleanly. Set the main adjusting screw to a position where the richest practical mixture is obtained. For this adjustment, the main adjusting screw should be turned 1/8 turn or less each time.
3. To test the engine, quickly bring the throttle shutter to full-open from idling position and acceleration the snowmobile. Then, watch the performance of engine operation.
4. After running at high-speed, check the spark plug for coloration for an indication of carburetor mixture.
5. Run the snowmobile at high-speed, and test if the engine will pick up speed smoothly. Repeat the adjustments as specified in 1-2 if necessary.

Note:

When the snowmobile is used under severe conditions the following spark plugs may be selected: NGK B-7HS, B-8HS or Champion L-3G.

7–2–7 Twin Carburetor Adjustment

Adjusting the throttle shutter opening.
With two carburetors, the throttle shutters must be so adjusted that both are the same in opening.
To adjust the throttle shutters, follow the steps as specified below.

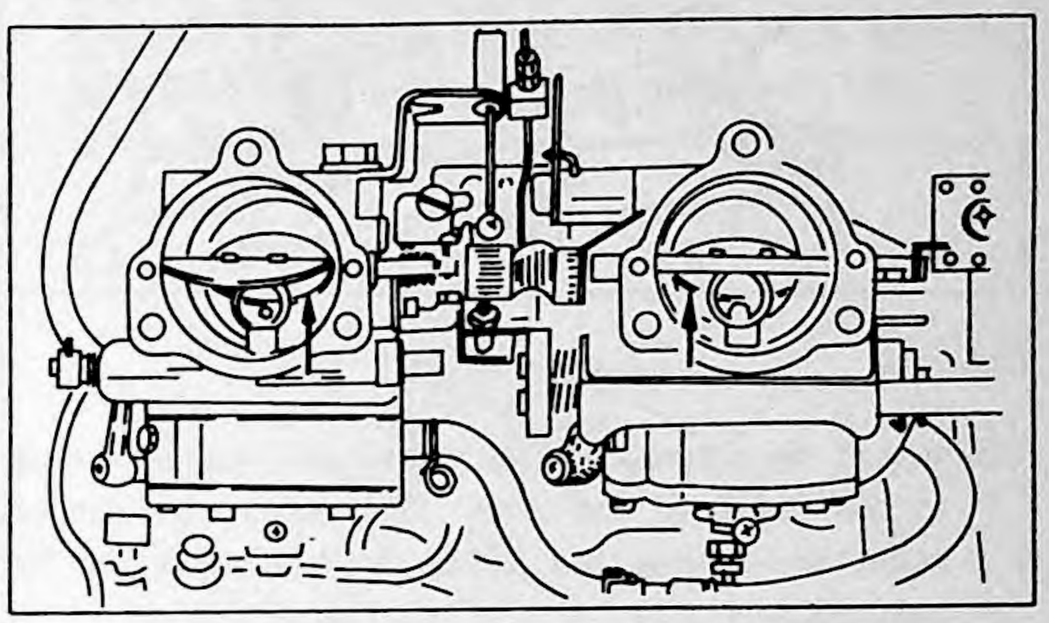

Fig. 7-20

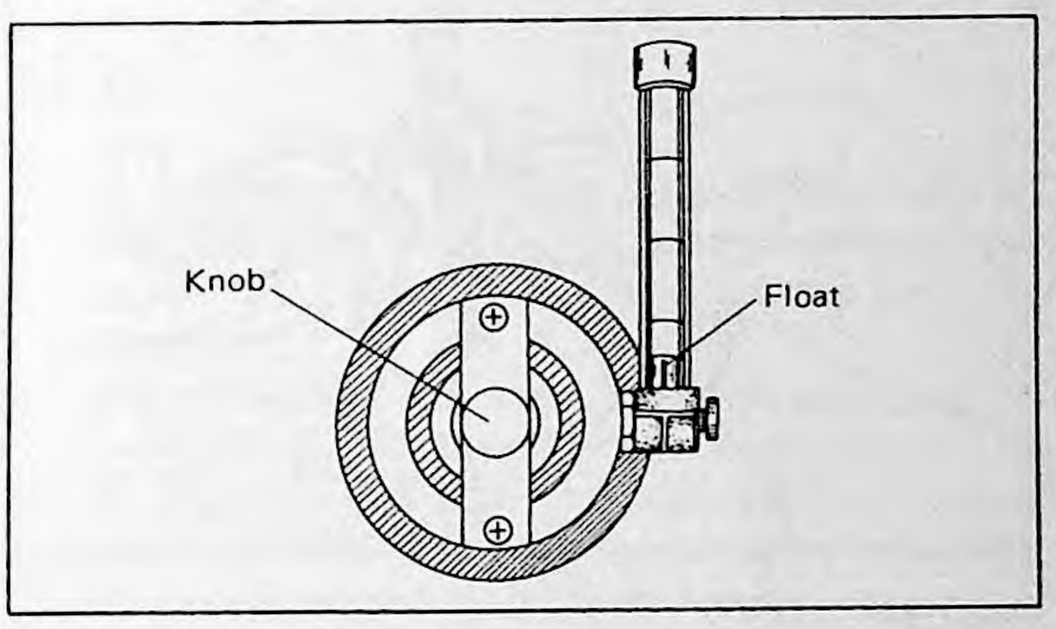

Fig. 7-21

(1) Attach the carburetor balancer to the left-hand carburetor inlet.

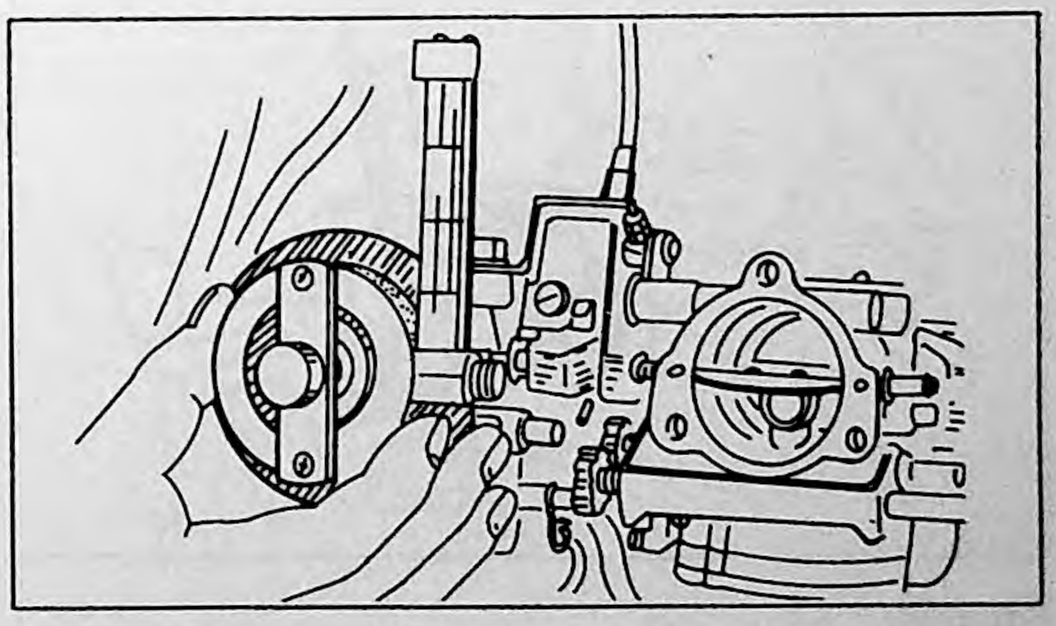

Fig. 7-22

(2) Adjust the engine speed to the specified idling speed.

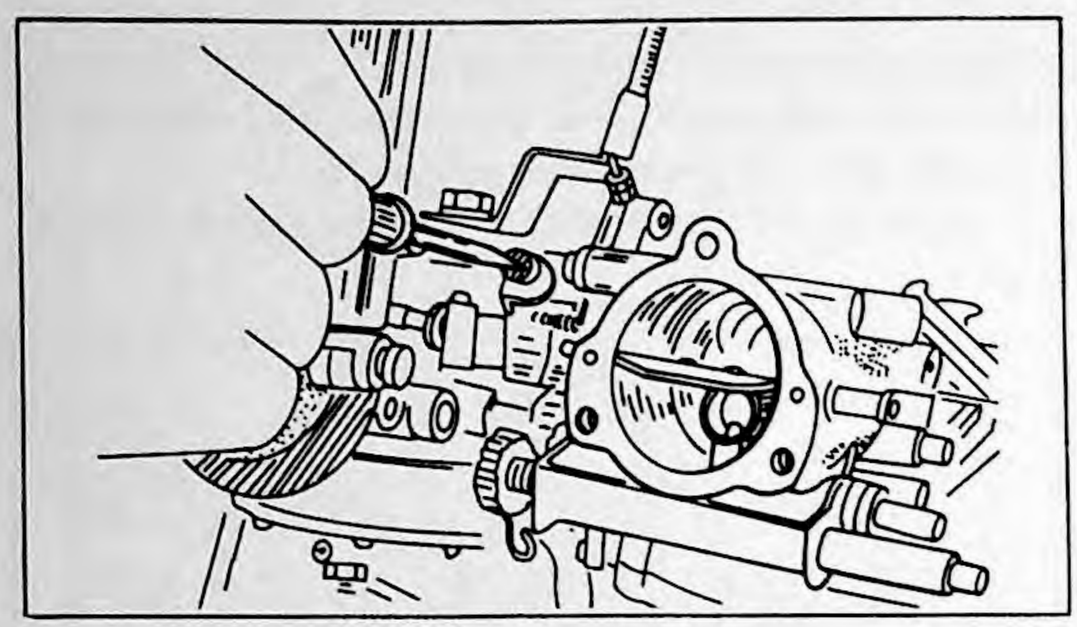

Fig. 7-23

(3) Adjust the balancer so that the balance float will move to the center of the scale. (The adjustment can be made by turning the knob in the center of the balancer.)

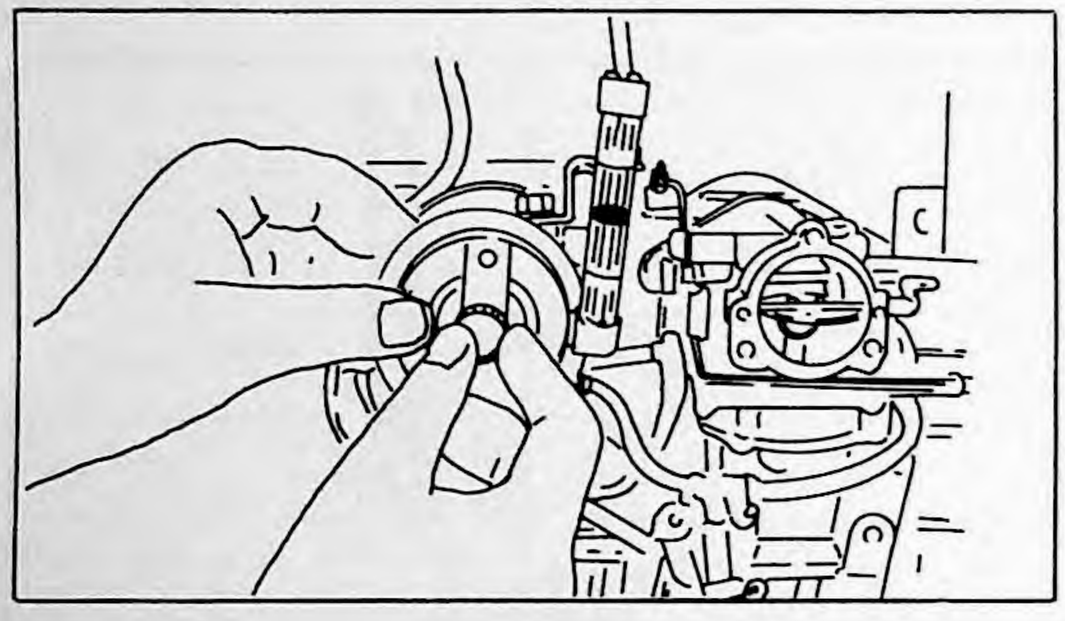

Fig. 7-24

(4) Attach the balancer to the right-hand carburetor air funnel. Then, check the float for position.

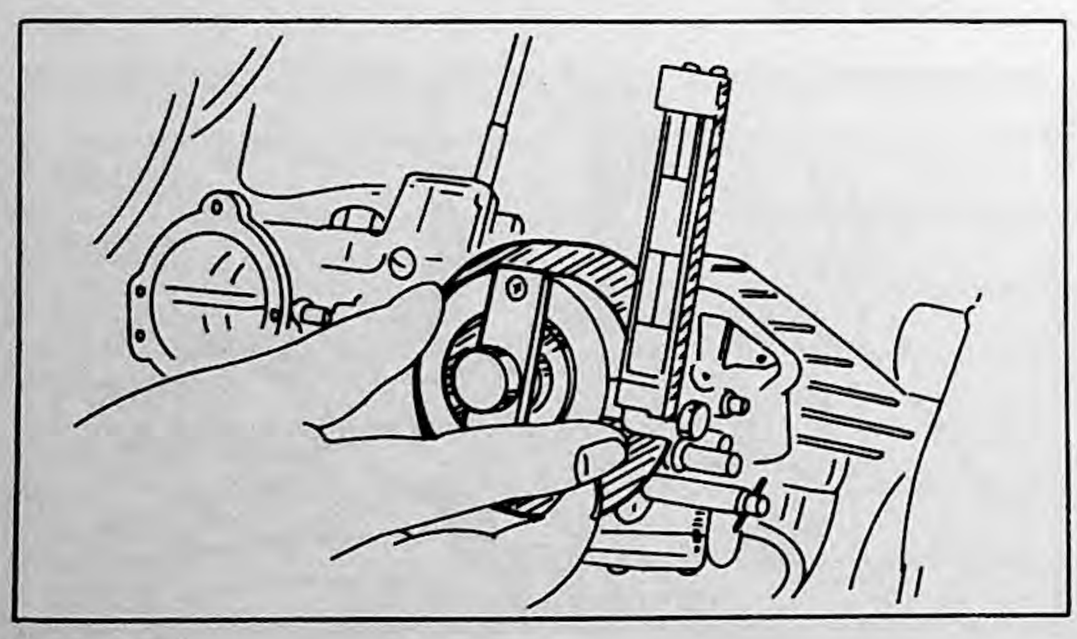

Fig. 7-25

(5) If the float is above the scale center, loosen the throttle synchronizing screw. If the float is below the scale center, tighten the throttle synchronizing screw. Then, turn the knob in the center of the balancer so that the float will move to the scale center.

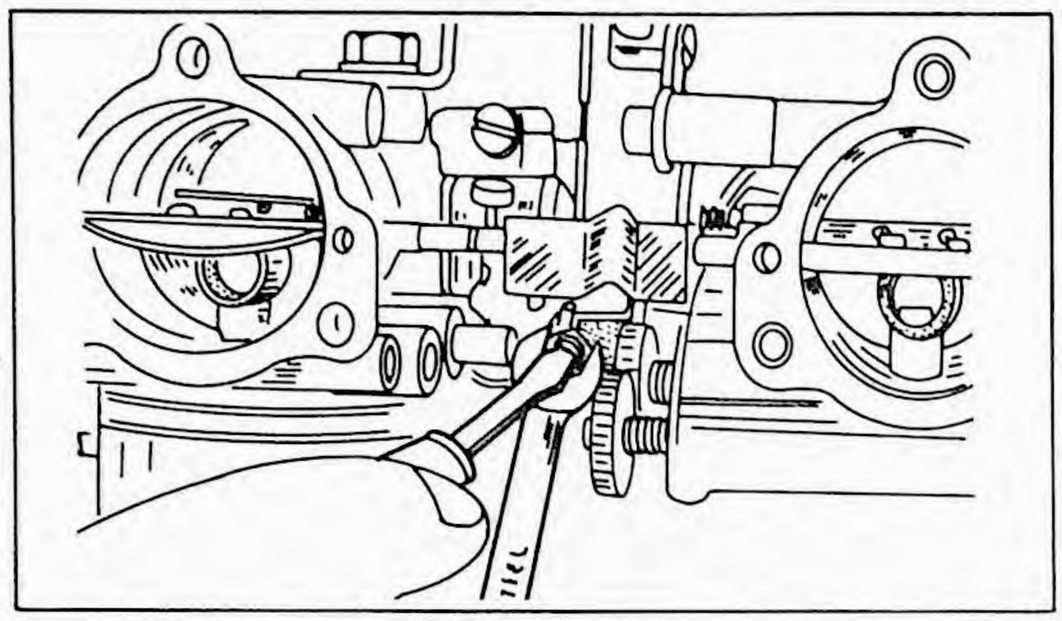

Fig. 7-26

(6) After the adjustment, set the throttle stop screw so that the engine idles at a specified speed.

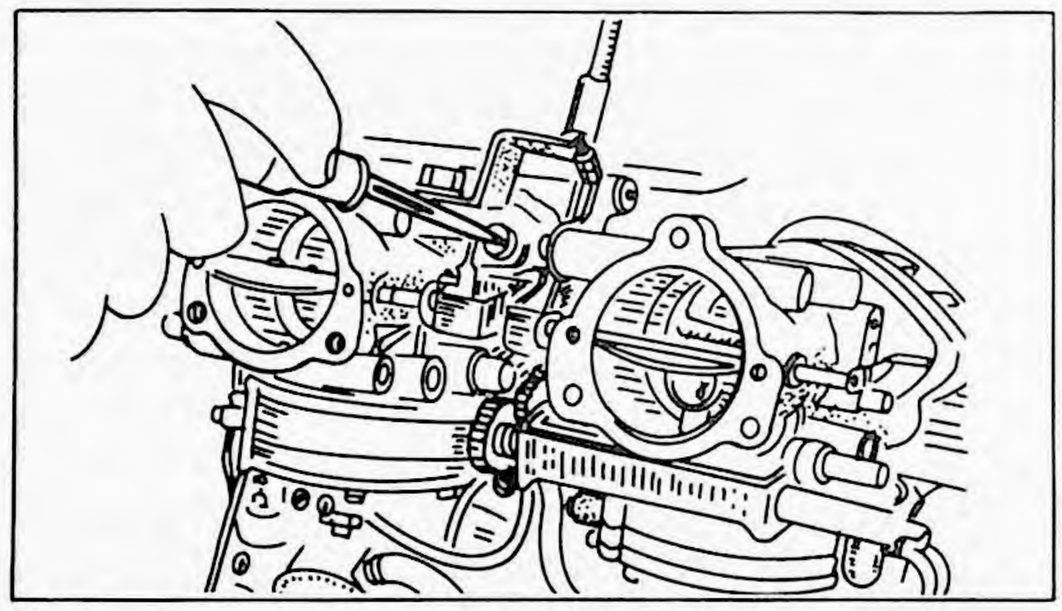

Fig. 7-27

7–2–8 Main Adjusting Screw and Slow Adjusting Screw

On a twin-carburetor, both main adjusting screw and slow adjusting screw are positioned, respectively, on the right side of the right-hand carburetor and on the left side of the left-hand carburetor in order to provide easy access.

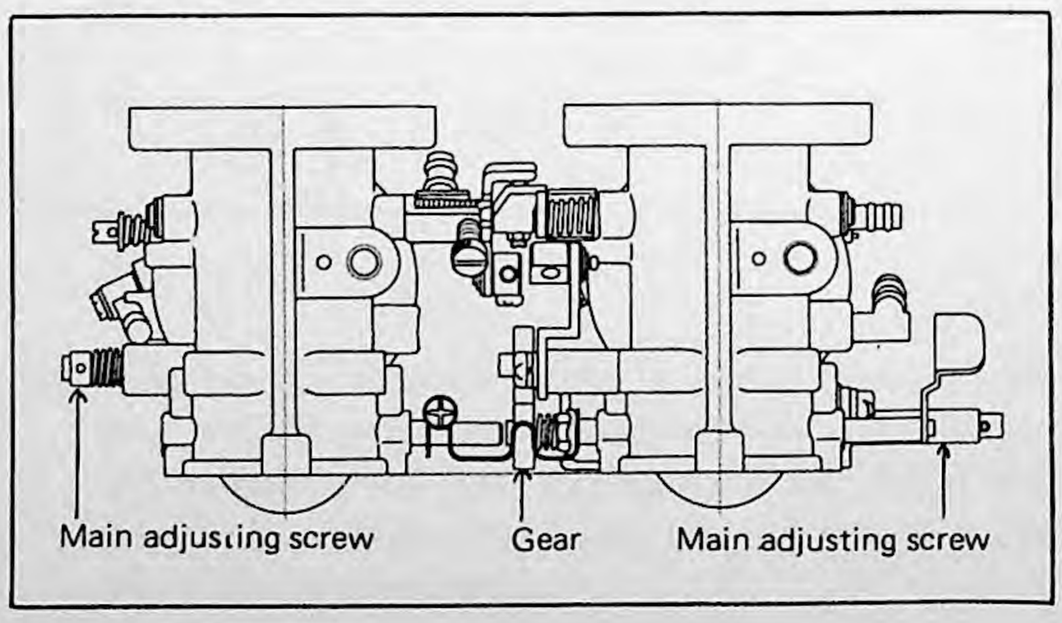

Fig. 7-28

7–2–9 Adjustment

Both main adjusting screw and slow adjusting screw can be adjusted in the same manner as in the case of a single-carburetor, and both right-hand and left-hand carburetors are identical in construction. Therefore, in this section, the right-hand carburetor is referred to.

(1) Back out the slow adjusting screw from a lightly seated position, at the same time, the setting of the main adjusting screw should be adjusted to factory recommended setting.

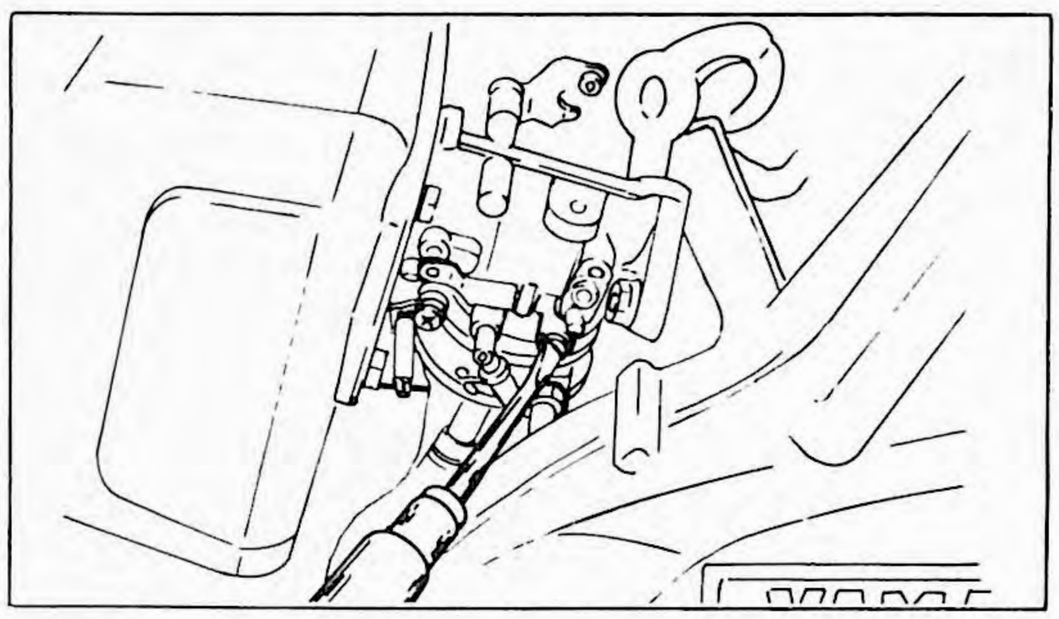

Fig. 7-29

(2) Start the engine and let it warm up.

(3) Increase the engine speed to specified r.p.m. by use of the throttle stop screw.

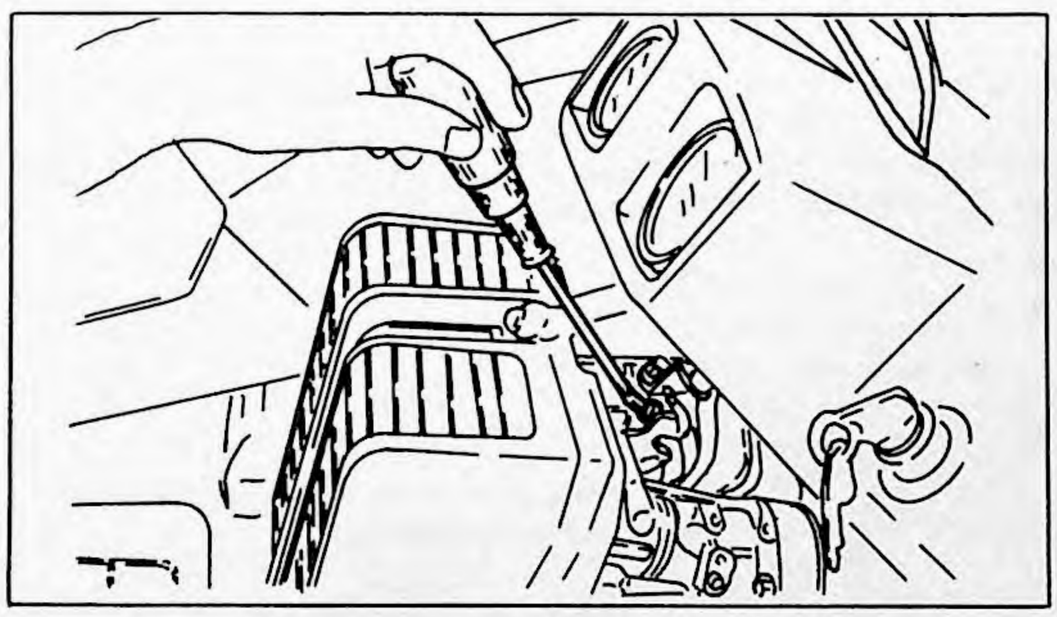

Fig. 7-30

(4) Turn the slow adjusting screw in or out 1/8 turn each time and when the idling speed reaches its maximum and becomes stable, stop turning the screw. Adjust the throttle stop screw once again, and set it so that the engine idle at specified r.p.m.

(5) Back off the slow adjusting screw 1/8 turn.

Main Adjuster Adjustment

The main adjusting-screw is used to adjust the air-fuel mixture when the snowmobile runs at high-speed. Adjustment should be made so that the mixture becomes as rich as possible, provided that the engine still runs smoothly. (This is necessary to prevent engine overheating)

For adjustment, follow the following steps.

1. First, back out the main adjusting screw as specified.
2. To adjust the main adjusting screws, run the snowmobile at high-speed and find the range of setting positions (number of turns out) at which the engine runs cleanly. Set the main adjusting screw to a position where the richest practical mixture is obtained. For this adjustment, the main adjusting screw should be turned 1/8 turn or less each time.

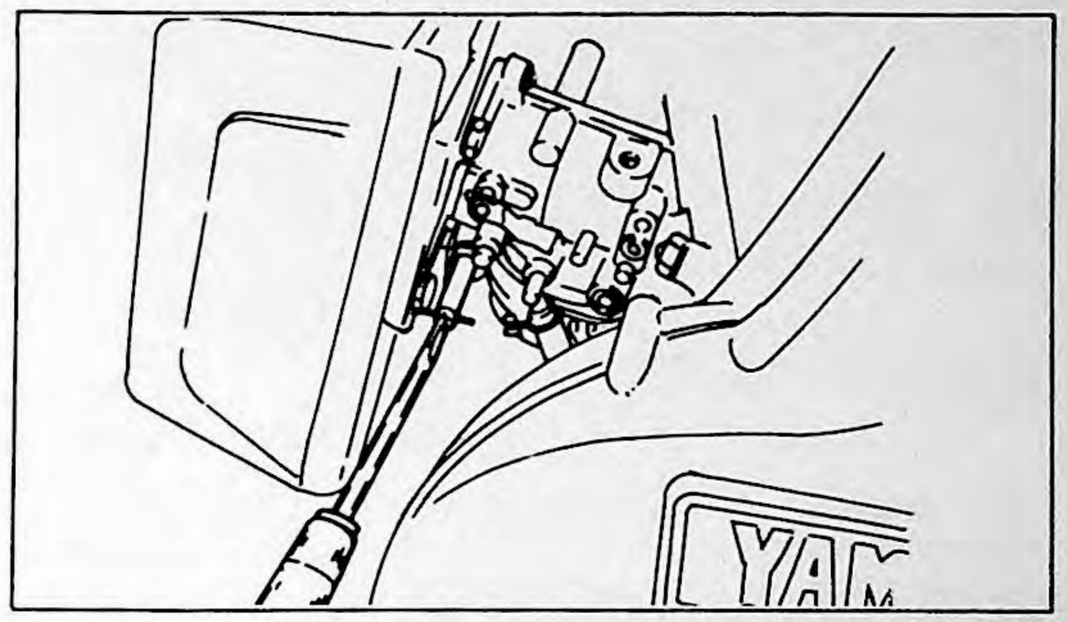

Fig. 7-31

3. To test the engine, quickly bring the throttle shutter to full-open from idling position and acceleration the snowmobile. Then, watch the performance of engine operation.
4. After running at high speed, check the spark plug for coloration for an indication of carburetor mixture.
5. Run the snowmobile at high speed, and test if the engine will pick up speed smoothly. Repeat the adjustments as specified in 1-2 if necessary.

How to Overhaul, Replace Parts, Adjust (SW433C, SL433B, EL433B, EW433C, SL338D)

After re-assembled, readjust fuel level or the regulator completely.

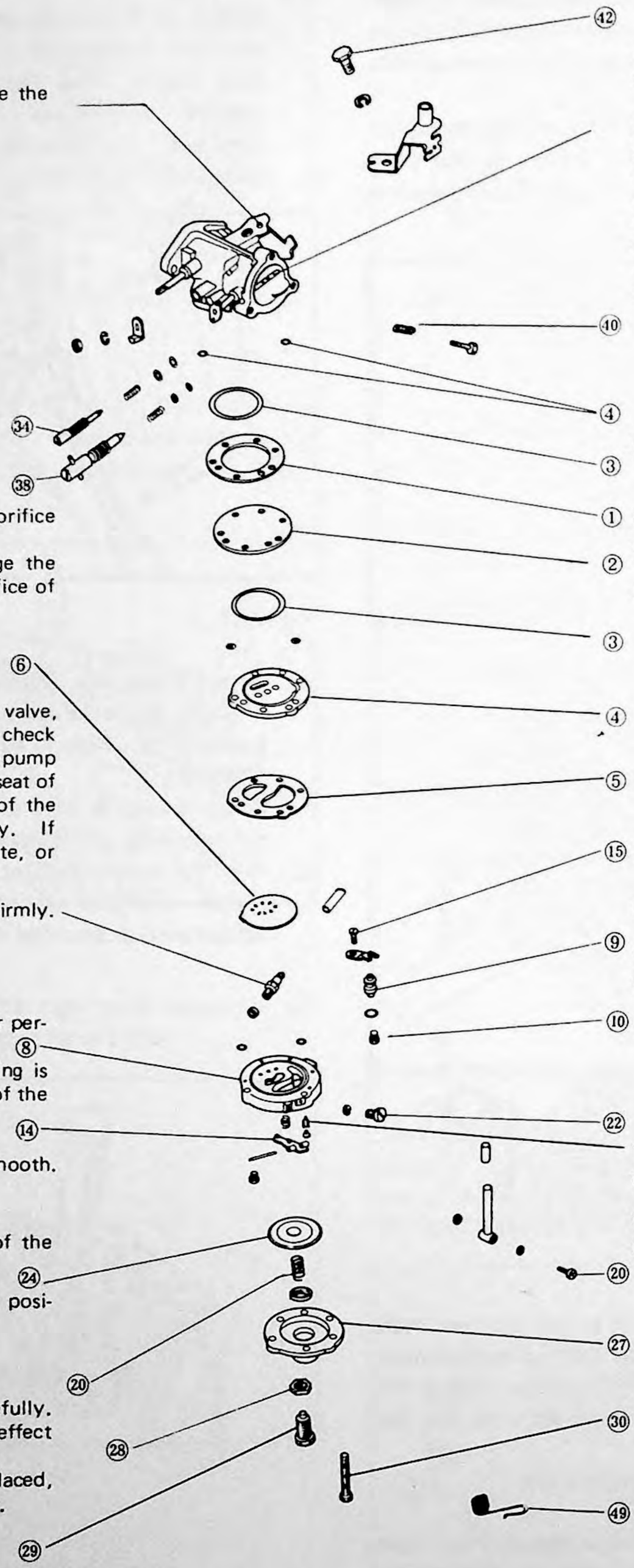

Never try to overhaul or replace the throttle valve or shaft.

Do not try to overhaul or replace the choke mechanism recklessly.

If the shaft is bent, or the lever is damaged, can replace.
Be careful not to lose the friction ball or the spring.
After replaced the choke valve fixing screws must be hammered firmly. If not loose screws may cause a fetal damage for the engine.

Never damage the top of the adjuster.

Never forget to insert ring.

When replacing, confirm if the orifice of the body is smooth.
Too tight screwing may damage the taper of the adjuster or the orifice of the body when replacing.

When assembling ① ② ③ ④ ⑧ ㉗ care should be taken.

All the fuel passages must coincide.

Confirm the correct position.

When assembling the check valve, ensure all the outer lip of the check valve fit in the hollow of the pump body, and also ensure the valve seat of the pump body and six ports of the check valve coincide completely. If not, the pump may not actuate, or show poor performance.

⑮ Secure firmly.

Secure firmly.

Do not damage the tip of the taper.

When the tip is worn or damaged, replace with ⑩ by assembly.

Deformed spring may result poor performance.
When assembling, ensure the spring is in correct position for the guide of the lever.

Confirm if the action is enough smooth.

Take care not to make any flaws inside and the seat section.

When the seat section is worn or damaged, replace with ⑨ by assembly.

Insert correctly in the hollow of the pump body.

The outer lip must be correctly positioned when assembling.

Never pull or bend.
Handle the diaphragm spring carefully.
If pulled or bent, spring may effect poor performance.
When diaphragm spring is replaced, readjust fuel level of the regulator.

Secure the nut after fuel level adjustment.

Fig. 7-32

How to Overhaul, Replace Parts, Adjust (GP338, GP433B)

After re-assembled, readjust fuel level or the regulator completely

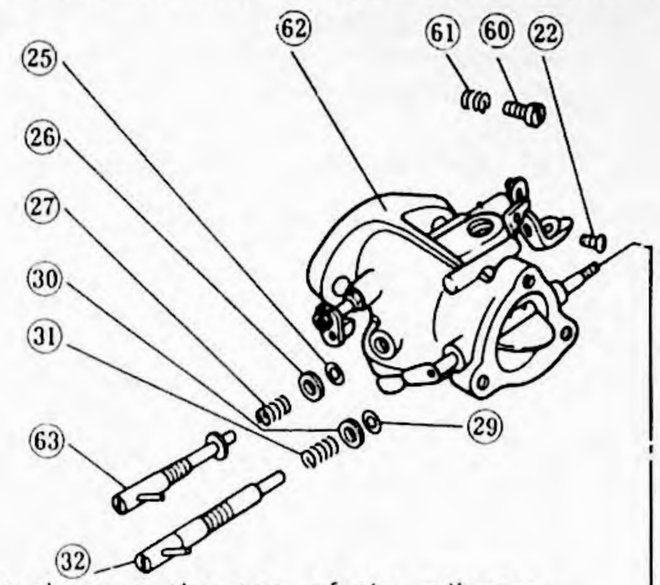

Never damage the top of the adjuster. When replacing, confirm if the orifice of the body is smooth.
Too tight screwing may damage the taper of the adjuster or the orifice of the body when replacing.

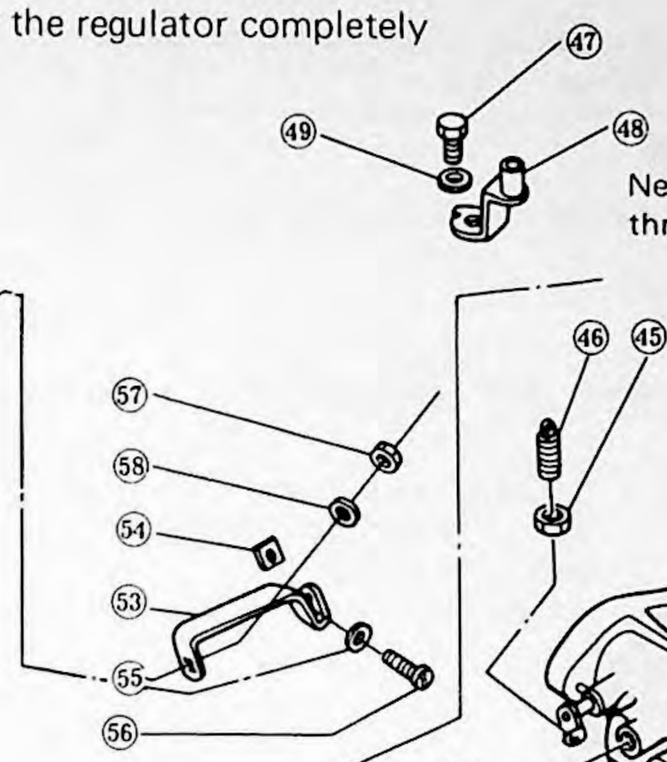

Never try to overhaul or replace the throttle valve or shaft.

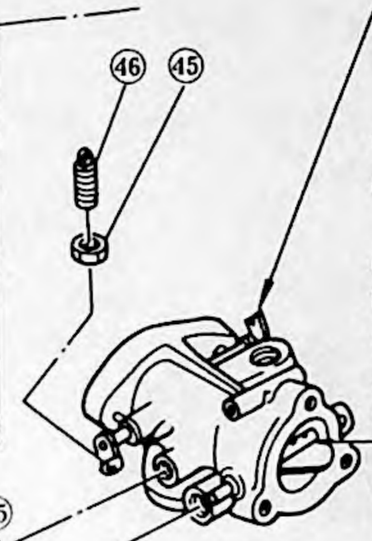

Do not try to overhaul or replace the choke mechanism recklessly.
If the shaft is bent, or the lever is damaged, can replace.
Be careful not to lose the friction ball or the spring.
After replaced the choke valve fixing screws must be hammered firmly. If not loose screws may cause a fetal damage for the engine.

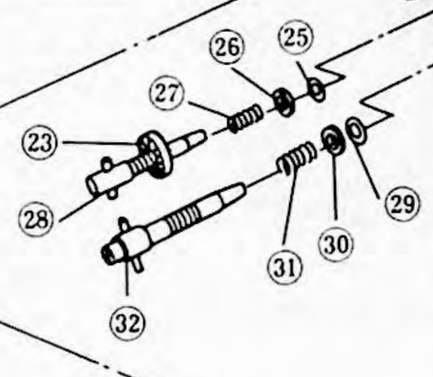

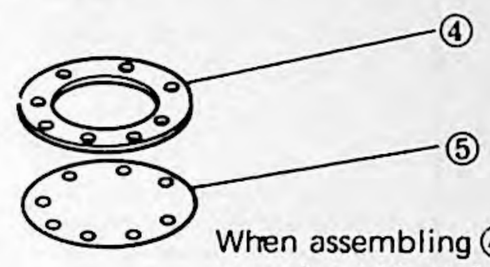

When assembling ④ ⑤ ⑥ ⑦ ㊷ care should be taken.
All the fuel passages must coincide.

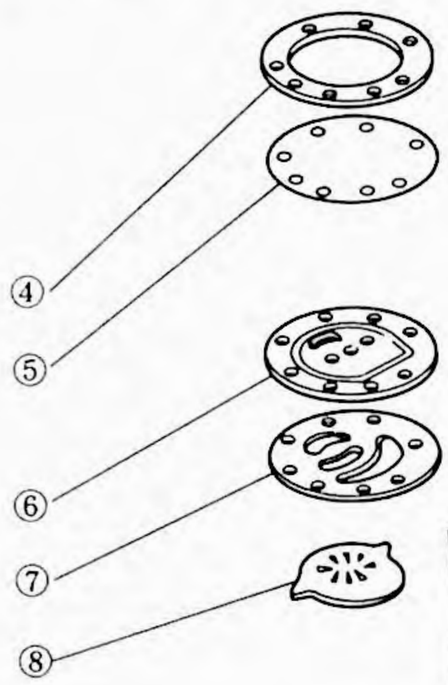

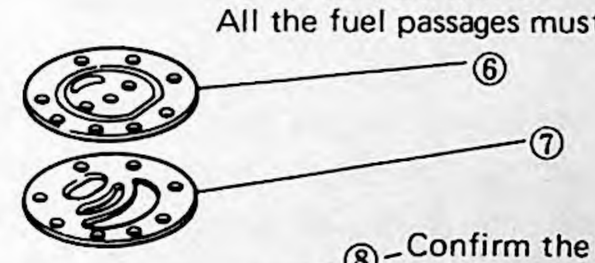

Confirm the correct position.

When assembling the check valve, ensure all the outer lip of the check valve fit in the hollow of the pump body, and also ensure the valve seat of the pump body and six ports of the check valve coincide completely. If not, the pump may not actuate, or show poor performance.
Do not damage the tip of the taper.

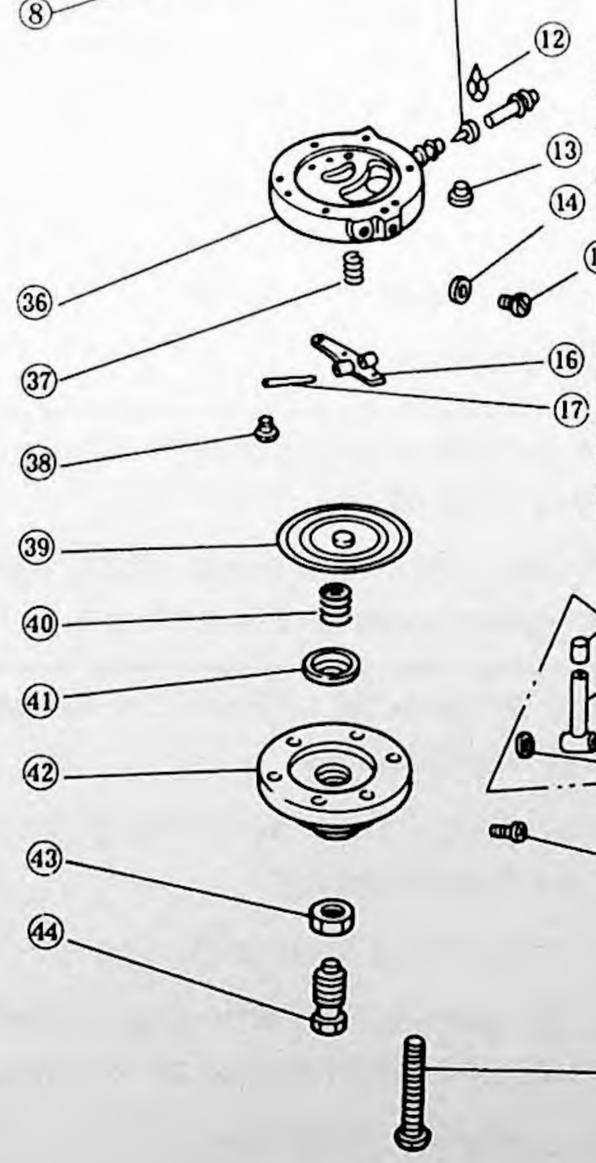

Deformed spring may result poor performance.
When assembling, ensure the spring is in correct position for the guide of the lever.

Never pull or bend.
Handle the diaphragm spring carefully.
If pulled or bent, spring may effect poor performance.
When diaphragm spring is replaced, readjust fuel level of the regulator.

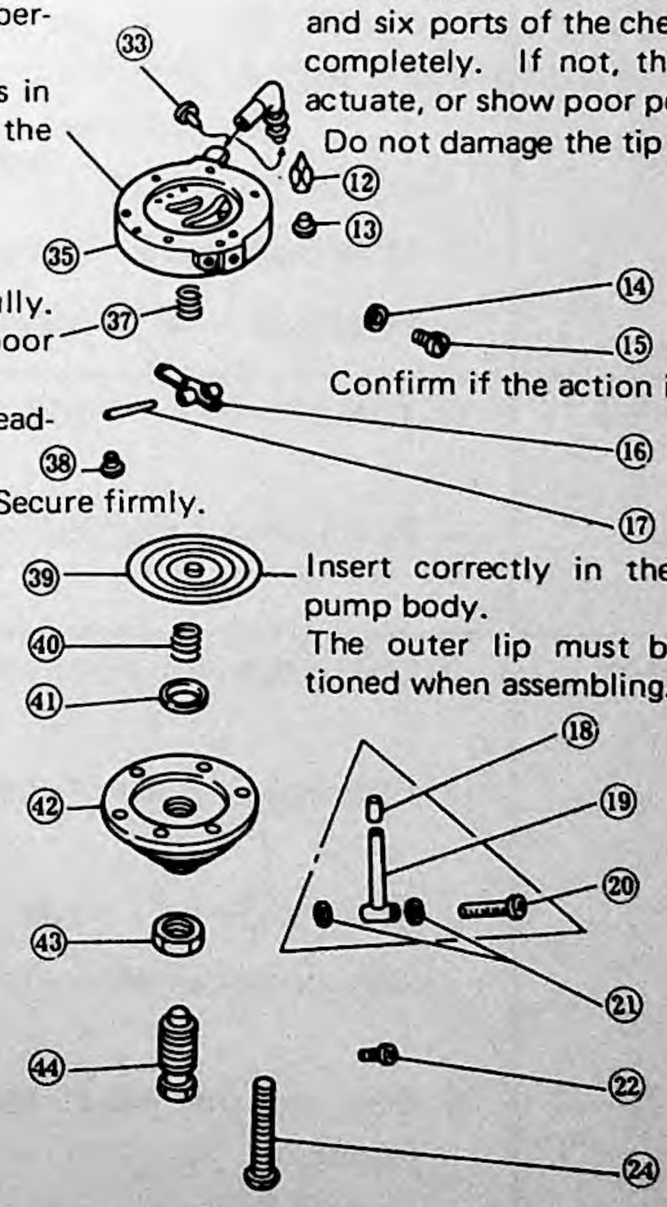

Confirm if the action is enough smooth.

Secure firmly.

Insert correctly in the hollow of the pump body.
The outer lip must be correctly positioned when assembling.

Fig. 7-33

Trouble Shooting

Trouble	Cause	Remedy
1. Overflow	o Inlet valve is dirty.	Remove inlet valve and clean it.
	o Inlet control valve does not close perfectly.	Replace inlet control valve. (When replacing it, make sure the seat surface is free of scratches.)
	o Inlet control valve does not operate smoothly.	1. Replace inlet control lever. 2. Reinstall inlet control lever correctly. (Adjust the end of lever to the position as shown in Fig. 7-34.)
	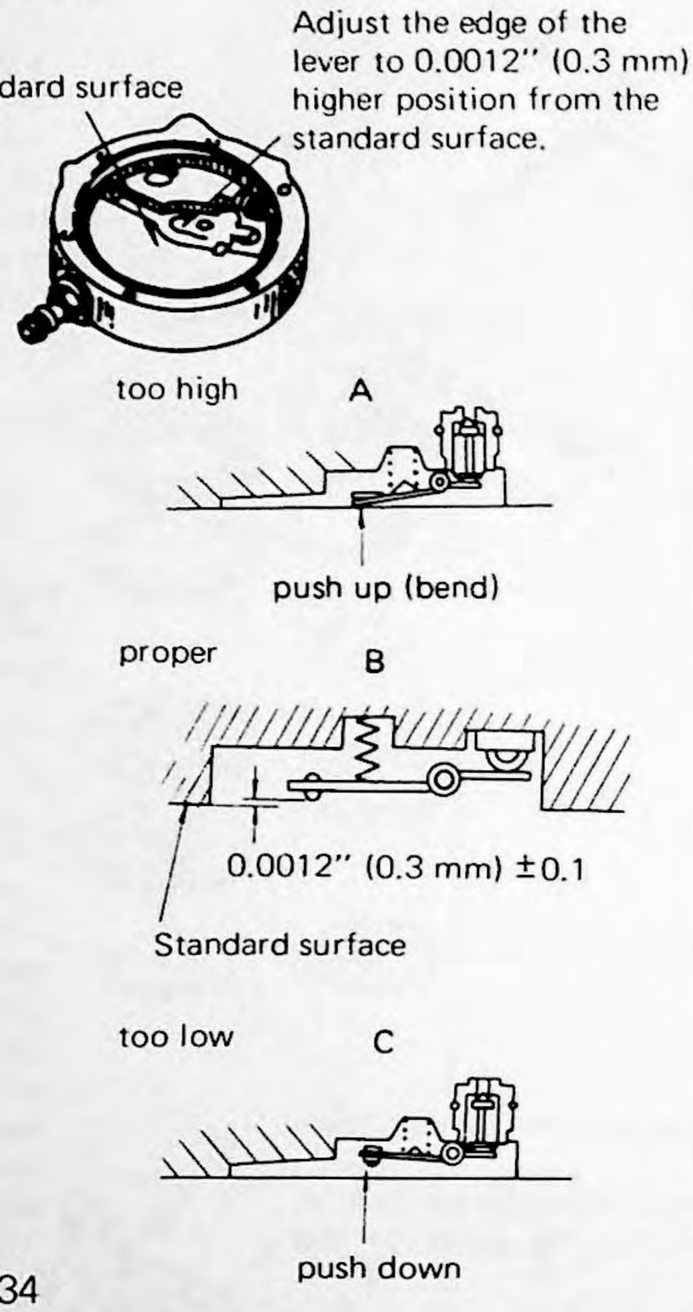 Fig. 7-34	
	o Main diaphragm is not correctly installed.	Reinstall main diaphragm correctly.
	o Regulator internal pressure is too high.	Reduce the pressure.
2. Hard starting	o Fuel passage is clogged.	Clean fuel passage with gasoline, and blow it out carefully with air.
	o Fuel pump is inoperative.	Check impulse port, fuel pump diaphragm, and check valves (inner and outer).
3. Rough idling	o Choke does not open perfectly.	Reassemble it correctly. Check the linkage between both carburetors.
	o Fuel supply is insufficient.	Use primer pump. Refer to Starting Procedures on the following page.
	o Fuel supply is in excess.	Refer to C of Starting Procedure.
	o Adjustment is incorrect.	Readjust as specified. Particularly, check regulator fuel lever and readjust as required.
	o Inlet control lever end is incorrect in height.	Readjust. (Refer to "Overflow".)
	o Fuel pump operation is not smooth.	Refer to "Hard Starting".
	o Both carburetors do not synchronize.	Check synchronization.

Trouble	Cause	Remedy
4. Engine speed will not increase. Main adjusting screw is not workable.	○ Main adjusting screw adjustment is improper.	See 81 page 83 and readjust.
	○ Fuel pump is faulty.	Air is in fuel pump. Remove plug screw, and bleed air at idling speed. (Fig. 7-35.)
	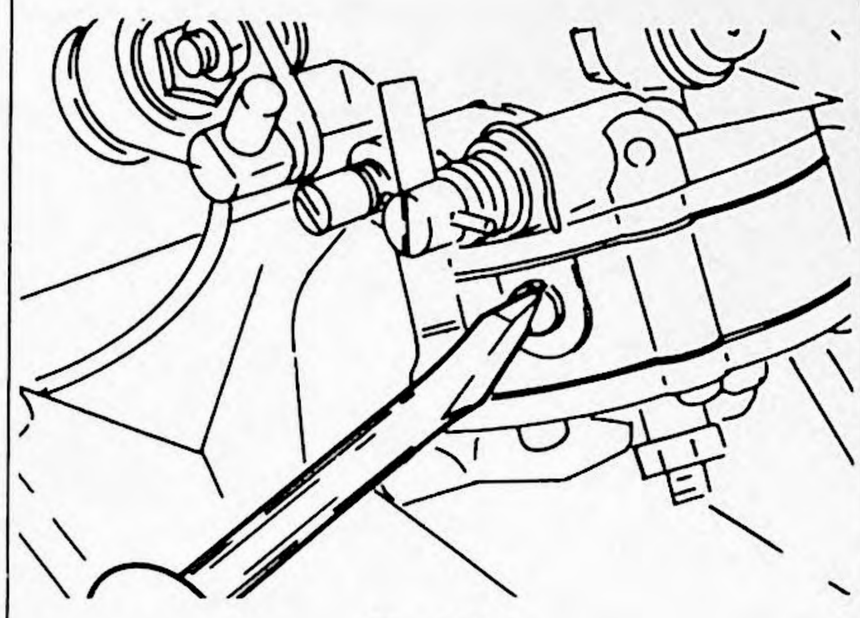 Fig. 7-35	
	○ Fuel passage is clogged.	Overhaul carburetor.

Note:

1. In order to maintain the diaphragm carburetor in good condition it must be cleaned and checked periodically. Dust and careless handling are the major causes for carburetor malfunctions. Cleaning and checking should be conducted in a clean place. For cleaning, gasoline should be used. Solutions including alcohol, acetone, lacquer, thinner, benzol, etc. should not be used as cleaning agents for they will damage the synthetic rubber in the carburetor.
2. When the primer pump is used for the diaphragm type carburetor, it should not be squeezed more than one time or an excess amount of fuel will be fed to the cylinder.
3. Fuel filter is attached in the fuel tank. It is advisable that it be replaced with a new one each season. If the filter is found faulty (obstructing the fuel flow or having a breakage in the element), it should be replaced in the form of an assembly unit.

CARBURETOR

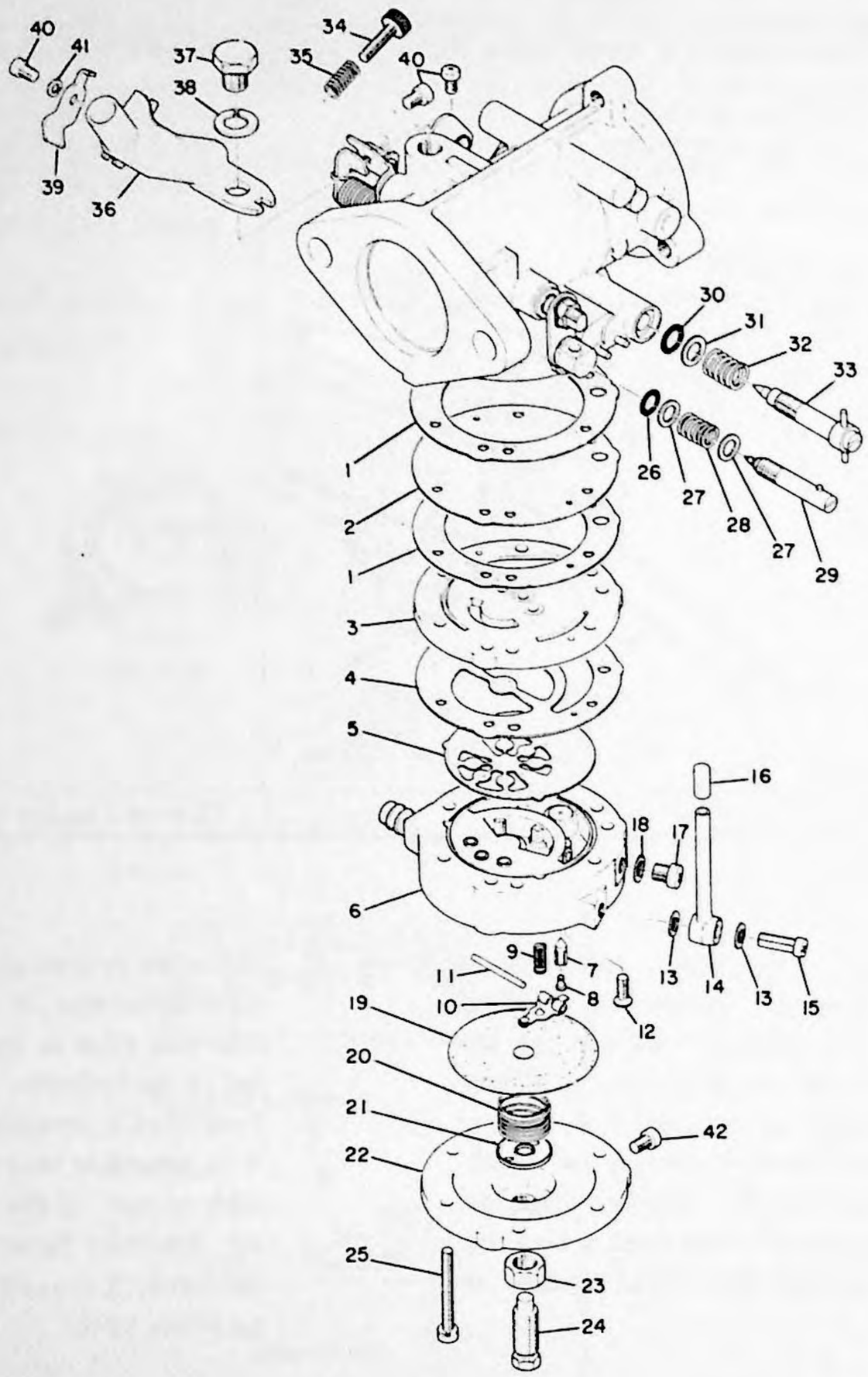

Fig. 7-36

Ref. No.	Description	Q'ty	Ref. No.	Description	Q'ty
0-1	CARBURETOR ASS'Y	1	22	BODY, pump 3	1
1	GASKET	2	23	NUT, lock	1
2	DIAPHRAGM, pump	1	24	SCREW, stop	1
3	BODY, pump 1	1	25	SCREW, panhead	6
4	GASKET	1	26	O-RING	1
5	VALVE, check	1	27	WASHER, plain	2
6	BODY, pump 2	1	28	SPRING, slow adjuster	1
7	VALVE, needle	1	29	SCREW, slow adjuster	1
8	PIN, valve	1	30	O-RING	1
9	SPRING, arm	1	31	WASHER, plain	1
10	ARM, float	1	32	SPRING, main adjuster	1
11	PIN, arm	1	33	SCREW, main adjuster	1
12	SCREW, oval head	1	34	SCREW, stop	1
13	WASHER	2	35	SPRING, stop screw	1
14	PIPE, fuel level	1	36	BRACKET, throttle	1
15	SCREW	1	37	BOLT	1
16	CAP, blind	1	38	WASHER, spring	1
17	SCREW, plug	1	39	PLATE, stay	1
18	WASHER, plain	1	40	SCREW, panhead	3
19	DIAPHRAGM	1	41	WASHER, spring	1
20	SPRING, main diaphragm	1	42	SCREW, panhead	1
21	SEAT, spring	1			

7–3 AUTOLUBE

1. The autolube tank should be supplied with YAMALUBE or another suitable oil for two-stroke aircooled engines. Check the rubber hose from the tank to the oil pump for obstructions from pinching or damage.

Note:

Two stroke oil is recommended for the extra added protection it offers. However automotive oil of SAE "MS" designation is suitable. Use a 10W-30 weight.

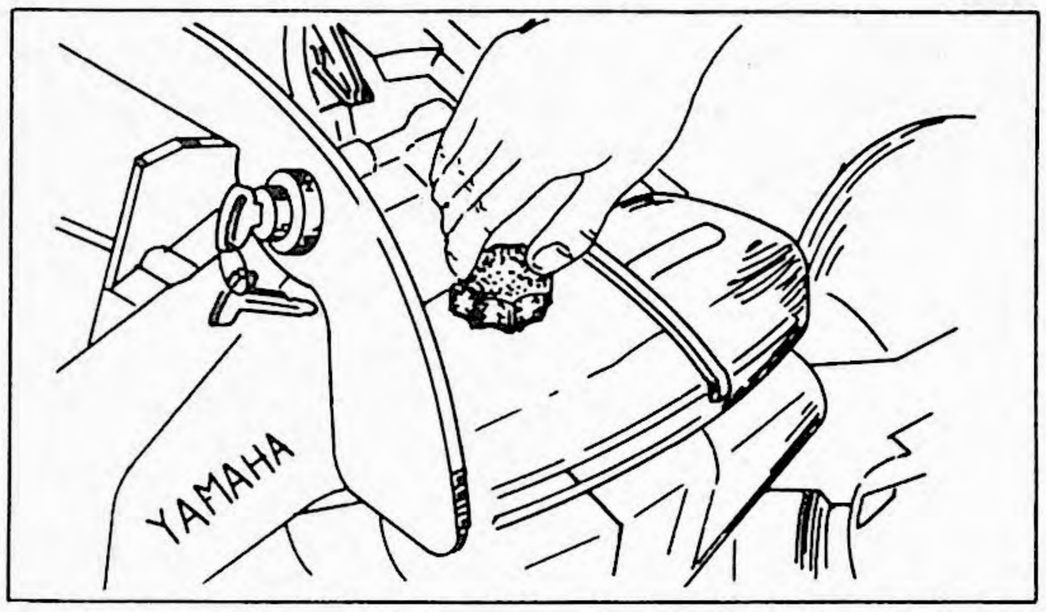

Fig. 7-37

2. Adjustment of the pump.
   1) Fully open the carburetor throttle valve.
   2) Turn pump control lever so that it is set to the match mark on the oil pump.
      (Adjust can be made by turning the pump control rod nuts.)
   3) After adjustment fully tighten the nuts, by holding bottom nut while tightening top nut.

When fully open the carburetor, mold as shown in Fig. 7-38 and adjust to the marking.

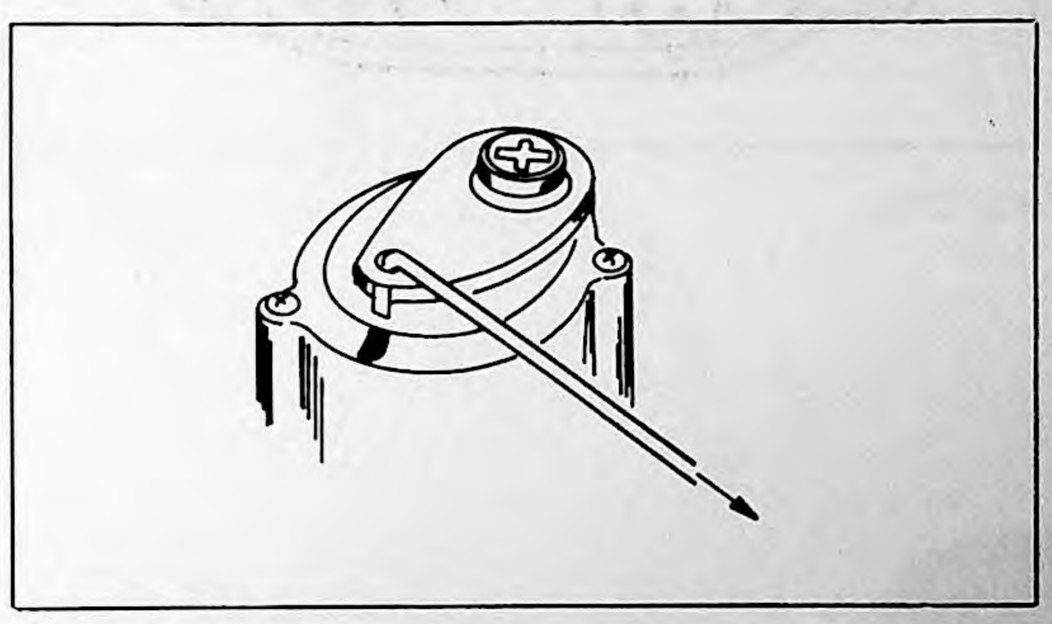

Fig. 7-38

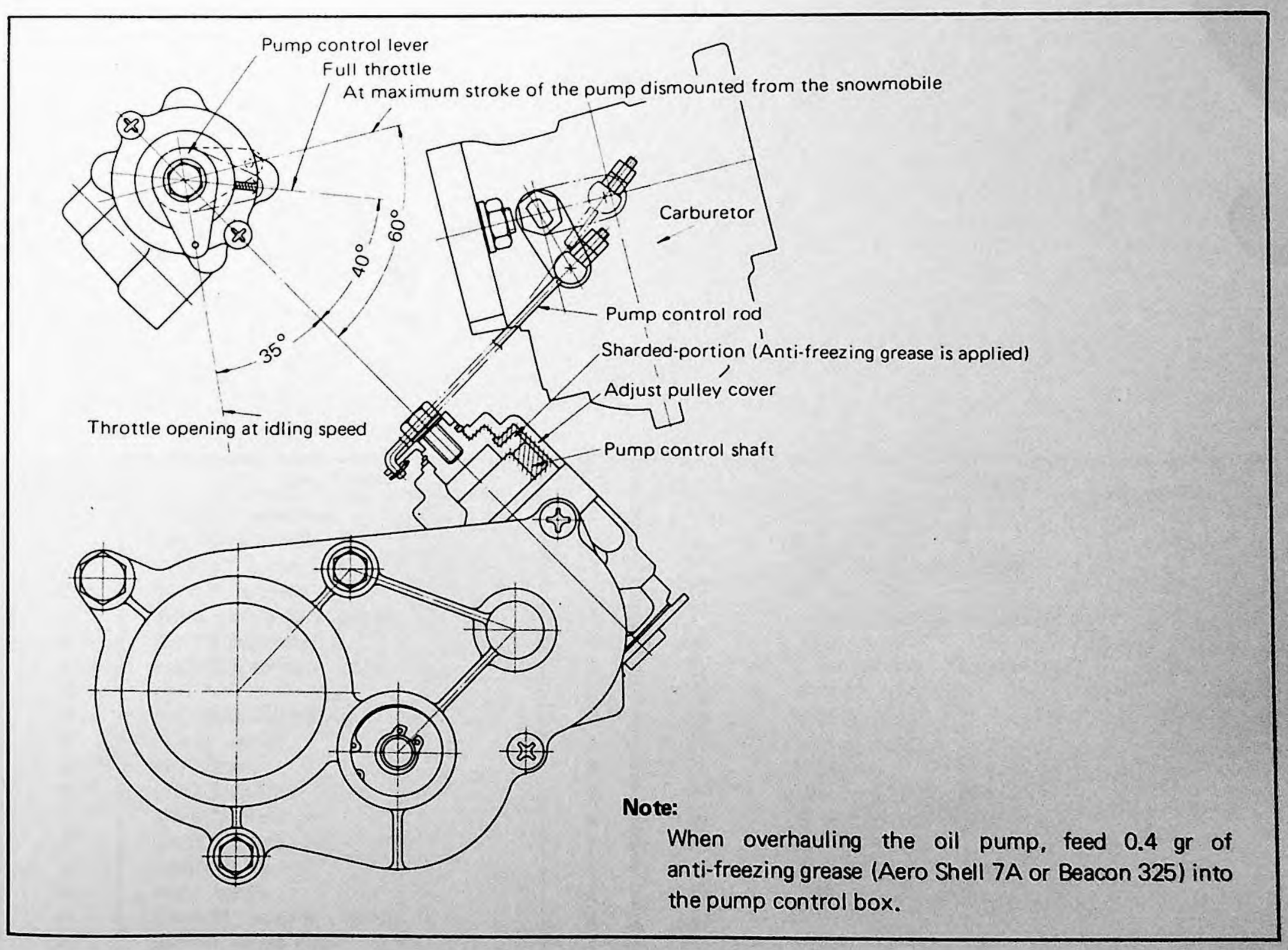

Note:

When overhauling the oil pump, feed 0.4 gr of anti-freezing grease (Aero Shell 7A or Beacon 325) into the pump control box.

Fig. 7-39

To set the pump control gears in the pump control box, bring the match marks of both gears in line.

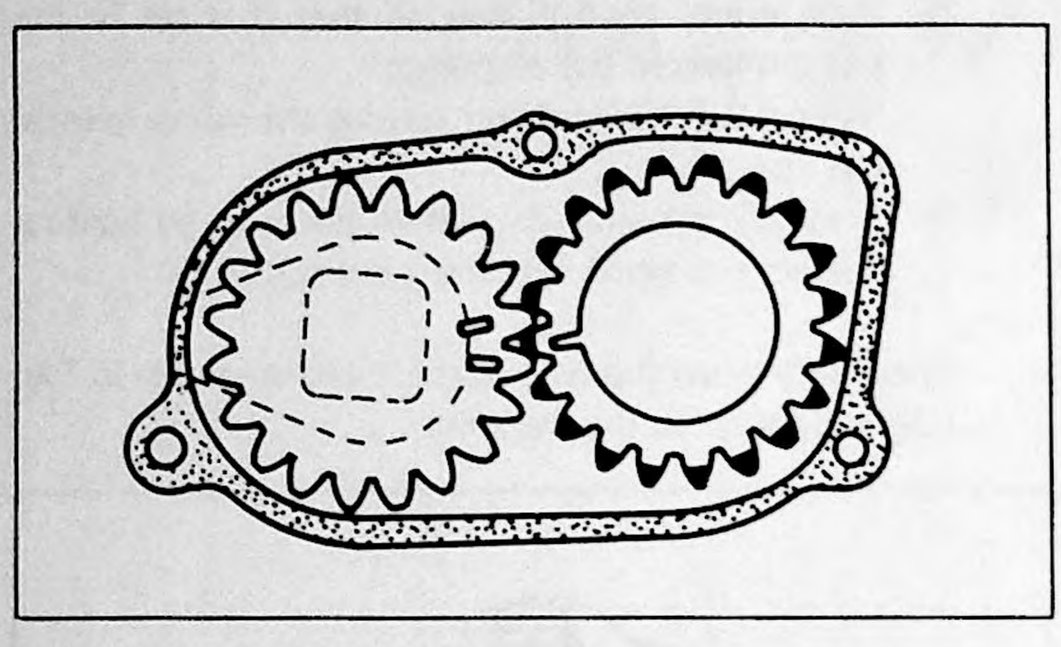

Fig. 7-40

1. Avoid disassembling the pump control gear, adjusting pulley cover and pump control lever as much as possible. If they are in need of disassembly, markings should be given to these parts prior to the disassembling, so that both gear shaft and control lever may be correctly reassembled.
2. The adjusting pulley cover, if once removed from the adjusting pulley, should be reinstalled, and the gear timing must be set. These two gears should be meshed so that the markings match.

Note:

When the pump control lever reaches the maximum working range, the center line of the lever and the marking on the case should be in line. In this case, the carburetor throttle valve is in the full-open position.

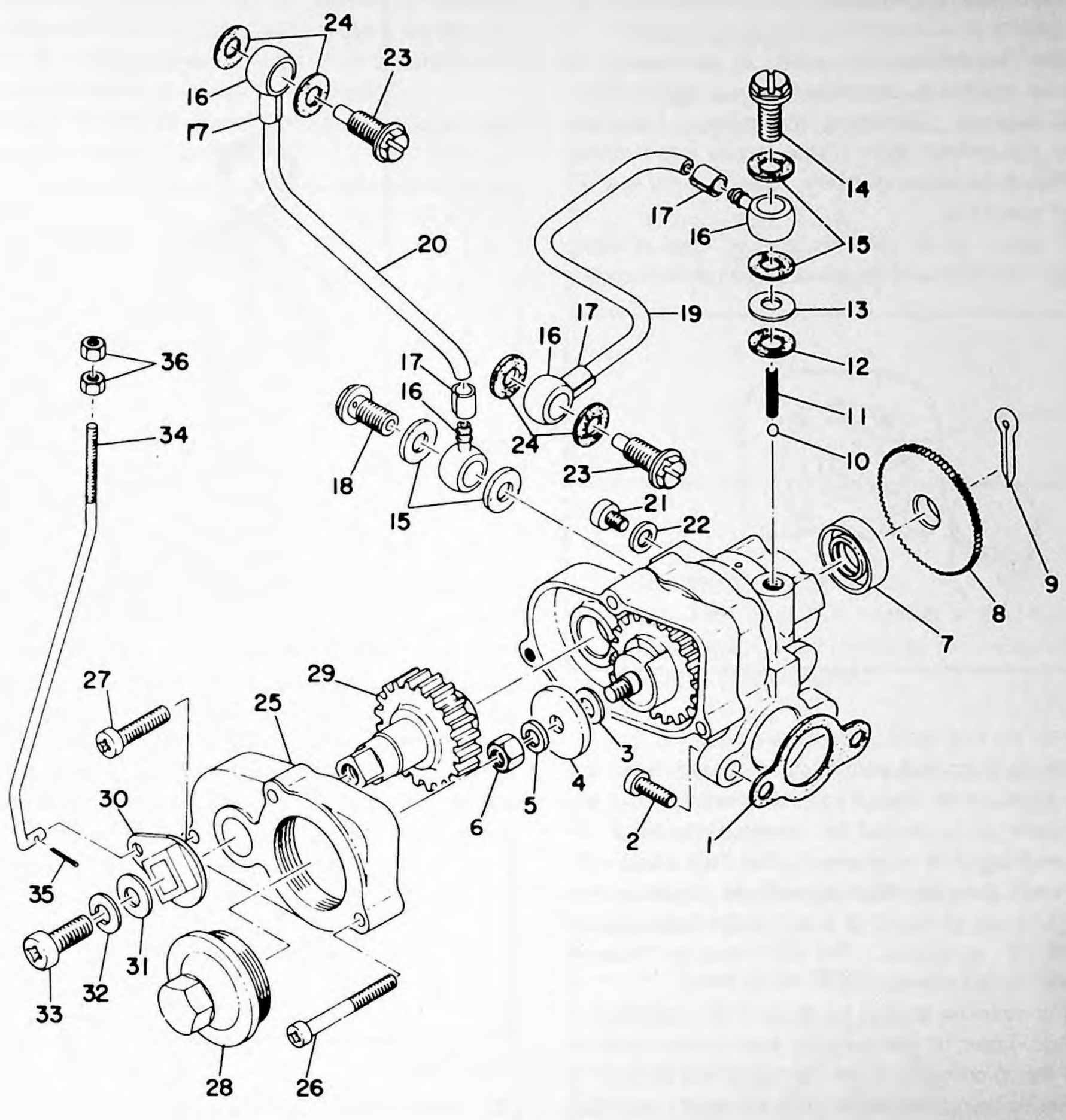

Fig. 7-41

Ref. No.	Description	Q'ty	Ref. No.	Description	Q'ty
0-1	GASKET, pump case	1	18	BOLT, banjo 1	1
	OIL PUMP ASS'Y	1	19	PIPE, 6 (3-120)	1
1	GASKET, pump case	1	20	PIPE, delivery right (3-170)	1
2	SCREW, panhead	2	21	SCREW, bind	1
3	SHIM, plunger (5.8-10-0.1)	1	22	GASKET, breather (4.2-8.5-0.5)	1
4	PLATE, adjusting	1	23	BOLT, banjo 2	2
5	WASHER, spring	1	24	GASKET, banjo bolt (6-13-0.5)	4
6	NUT	1	25	COVER, adjust pulley	1
7	OIL SEAL (S-10-21-5)	1	26	SCREW, panhead	2
8	PLATE, starter	1	27	SCREW, panhead	1
9	PIN, cotter	1	28	CAP, pump	1
10	BALL (5/32")	2	29	GEAR, pump control	1
11	SPRING, check ball	2	30	LEVER, pump control	1
12	GASKET, banjo bolt	1	31	WASHER, plain	1
13	WASHER, special	1	32	WASHER, spring	1
14	BOLT, banjo	1	33	SCREW, panhead	1
15	GASKET, banjo bolt (6-13-0.1)	4	34	ROD, pump control	1
16	BANJO, deliver pipe	4	35	PIN, cotter	1
17	CLIP, delivery pipe	4	36	NUT	2

7–4 TOP END MAINTENANCE

1. Since the formation of carbon is a product of two-stroke operation, decarbonization at regular intervales is essential. Removing the cylinder head and scraping the carbon from piston crown and cylinder head should be done at every tune-up or every 40 hours of operation.
   During every other decarbonization, the cylinder should be removed and the exhaust port decarbonized.

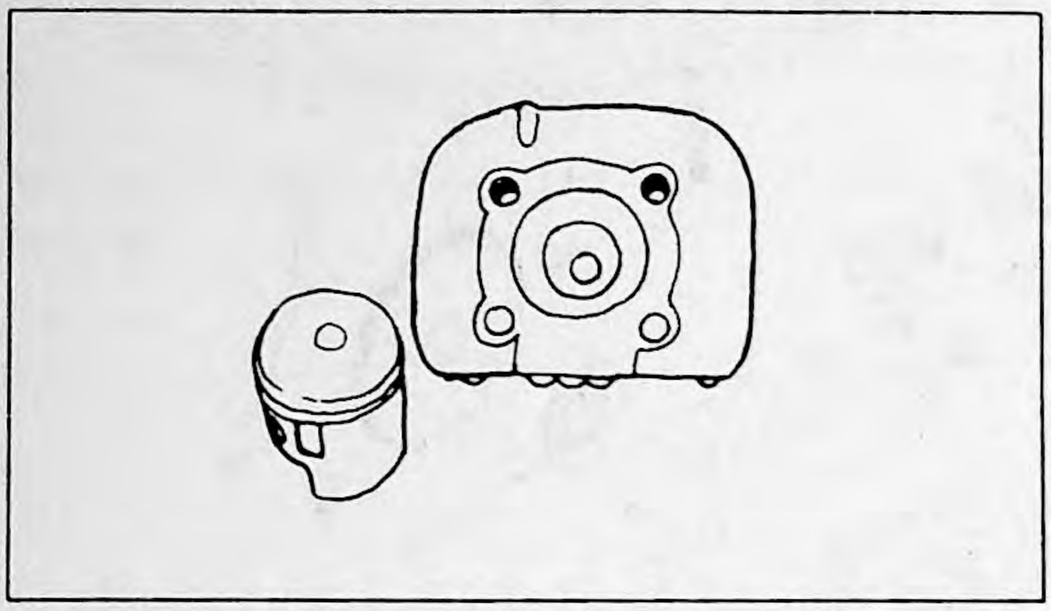

Fig. 7-42

2. When the cylinder and piston are removed, there are several checks which should be performed. First of all, the cylinder bore should be checked for wear or scoring each time it is removed. The "out of round" and "taper" can be checked with an inside micrometer. The out of round of the cylinder bore circular direction 90° at a time. The difference in measurements should not exceed 0.002" (0.05 mm).
   Honing or reboring should be done if this tolerance is exceeded. Taper of the cylinder bore is measured by moving the micrometer from the top to the bottom of the cylinder being careful to miss the port openings. The difference in these measurements (between top and bottom) should not exceed 0.002" (0.05 mm). If upon inspection of the cylinder bore, scoring of the cylinder wall is observed hone or rebore until these scores disappear. Before assembly, always clean the carbon from the exhaust port. Also wash out the cylinder with solvent or soap and water to insure that all hone material has been removed. Failure to do this may result in premature wearing or scoring of the cylinder and piston.

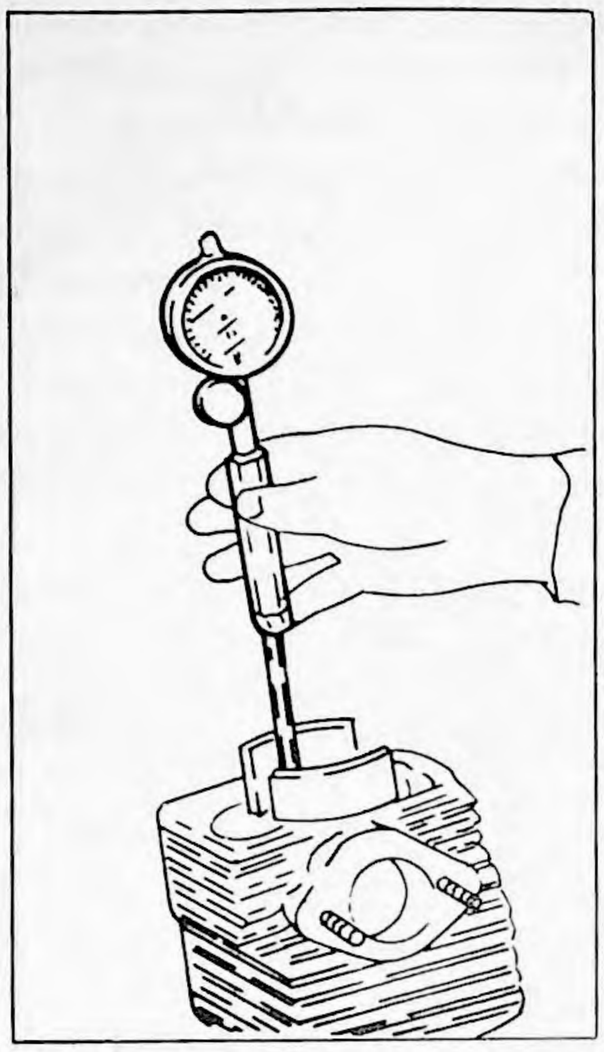

Fig. 7-43

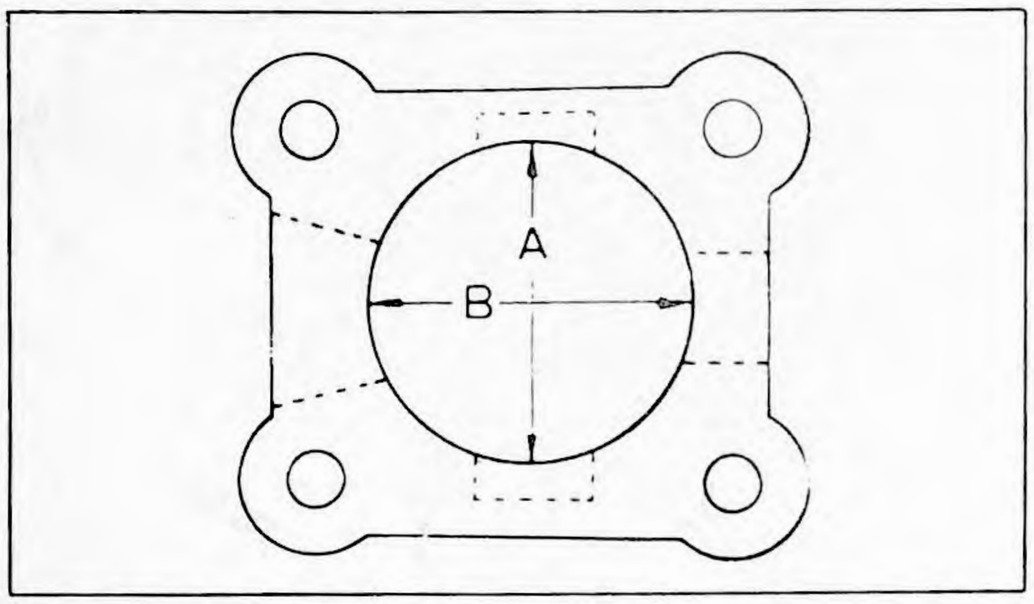

Fig. 7-44

3. The piston-to-cylinder wall clearance should be checked before reassembly.
   This is done by measuring the largest outside diameter of the piston and the smallest inside diameter of the cylinder bore. The largest diameter of the piston is checked 0.4" (10 mm) above the bottom of the piston skirt and at right angles to the piston pin hole. New position to cylinder wall clearance is 0.0018 ~ 0.002" (0.045 ~ 0.050 mm).

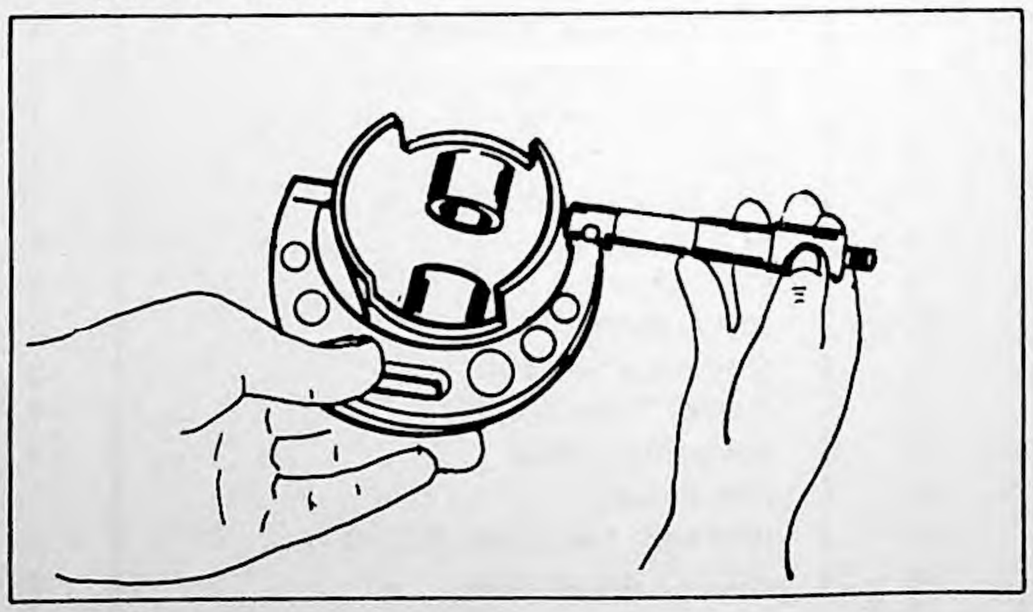

Fig. 7-45

4. The piston pin-piston fit can be checked by inserting the piston pin into the piston and checking the amount of resistance encountered. The piston pin should fit into the piston with a snung, thumb press fit.
   Also check the needle bearings and needle bearing cage for excessive wear, or overheating.

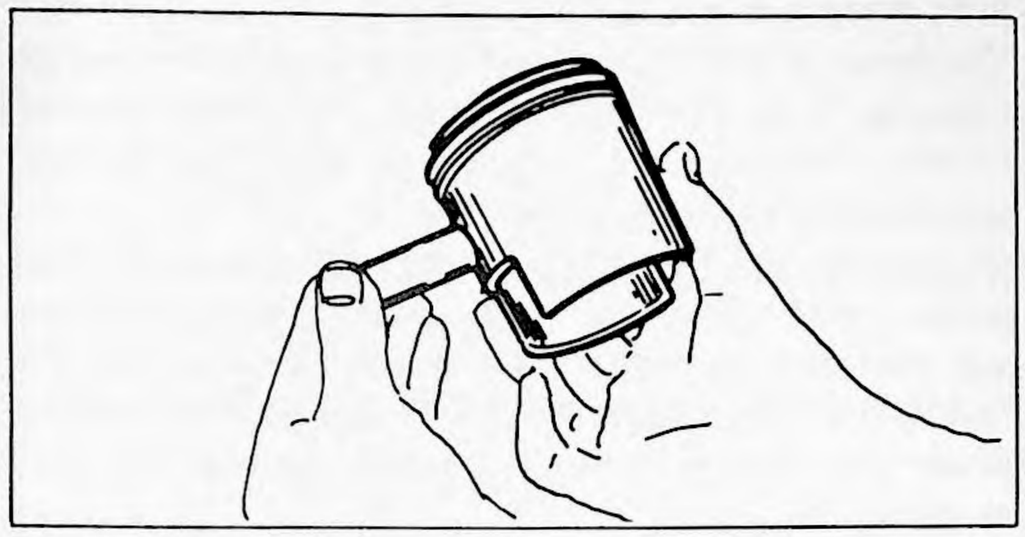

Fig. 7-46

5. The piston rings are removed from the piston by spreading them open with your fingers and lifting them off the piston. The piston ring gap can be checked by placing the rings inside the cylinder bore horizontally. The ring gap should be checked with a feeler gauge placed into the opening between the ends of the ring. Maximum gap of both upper and lower piston rings should not exceed 0.006 ~ 0.014" (0.15 ~ 0.35 mm).

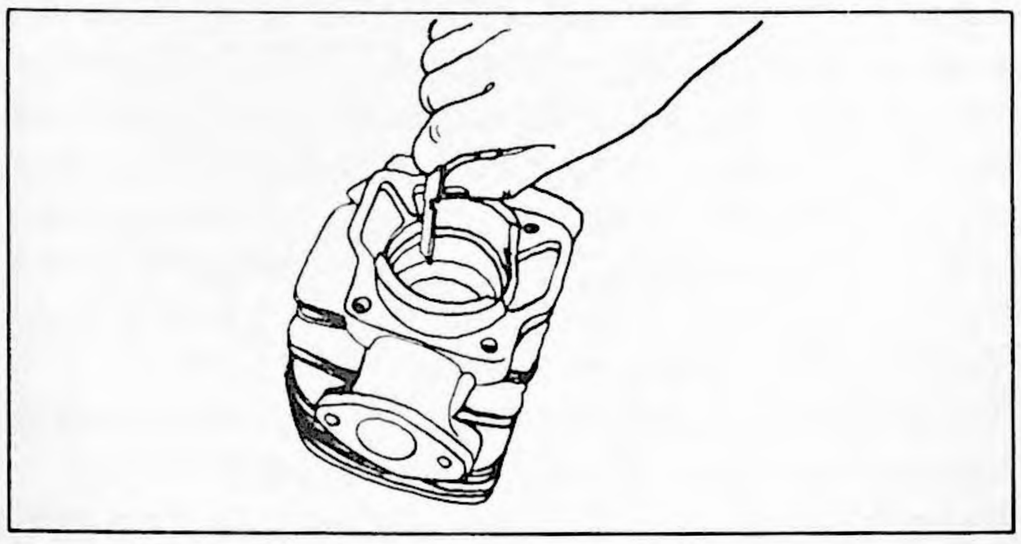

Fig. 7-47

6. Remove the carbon build-up from the piston ring grooves and replace the piston ring gap be aligned with the knock pin in the ring groove as shown in the illustration. This is especially critical when installing the cylinder over the piston.

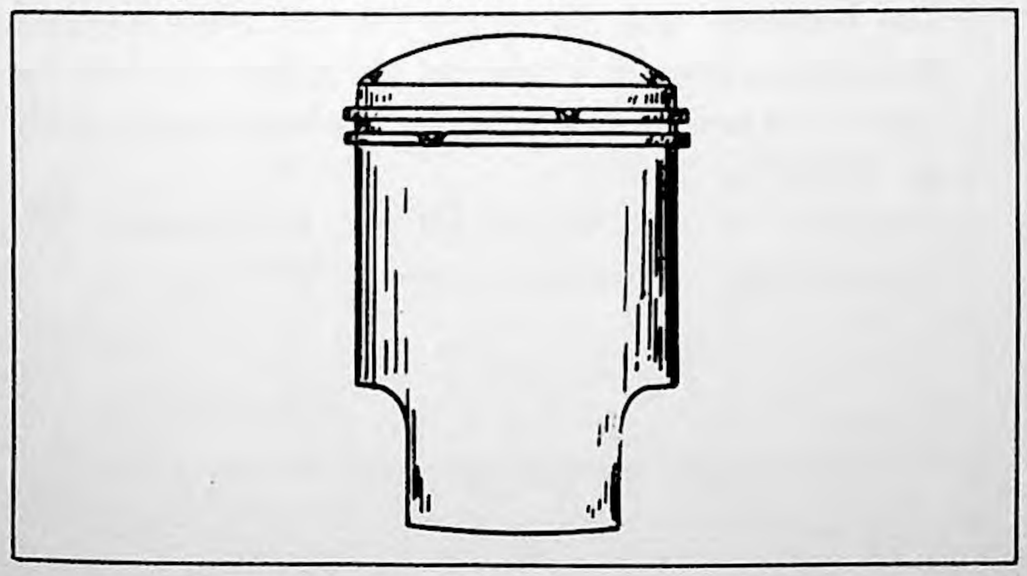

Fig. 7-48

7. The up and down play of the piston rings in the piston ring groove should be checked with a feeler gauge. Tolerance should be 0.001 ~ 0.0027" (0.03 ~ 0.07 mm) for both upper and lower rings.

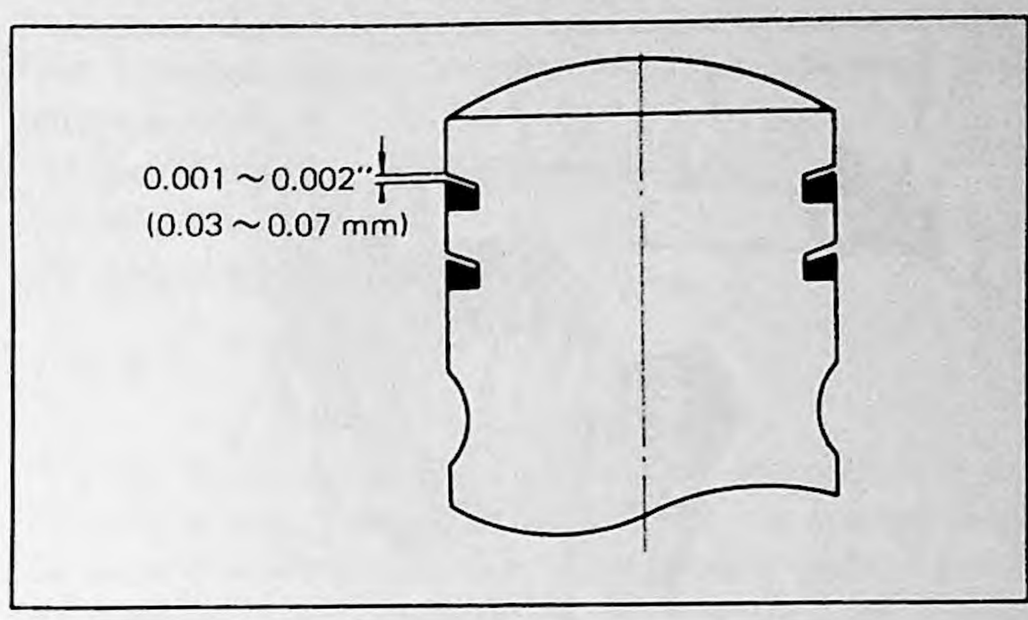

Fig. 7-49

8. Installing the piston
   The piston should be installed so that the arrow mark on the piston head points to the exhaust port (toward the front of the engine).

Note:

If the piston dome or piston skirt is badly scored or damaged, it would be advisable to replace the piston.
If a piston has once seized it would be advisable to replace the piston.
Once seizure has occured and the piston has been damaged, seizure can more readily re-occur.

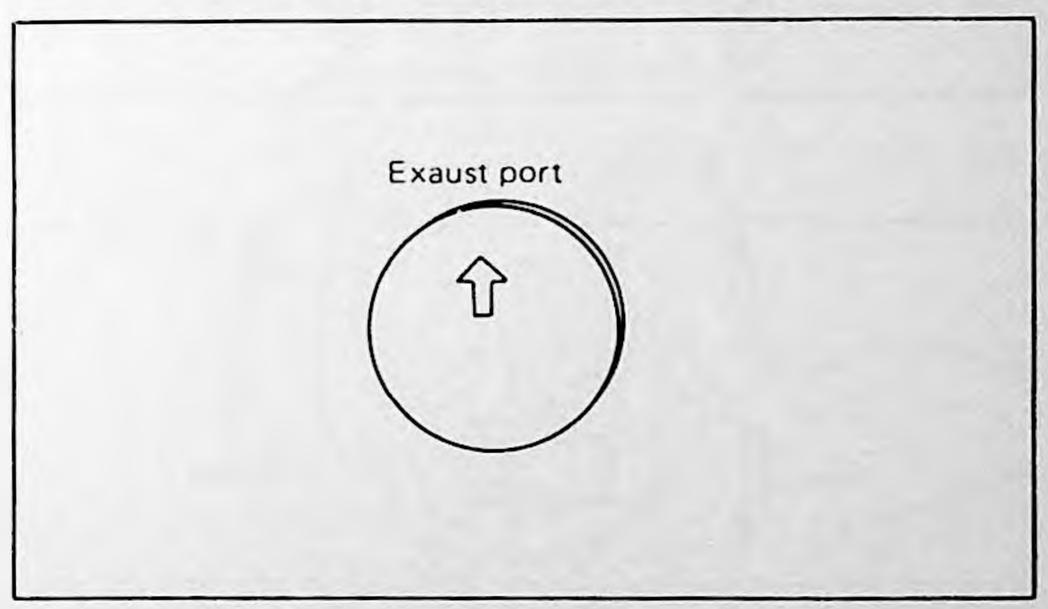

Fig. 7-50

9. Installing the cylinder head
   The cylinder head tightening torque is 16.5 ~ 19.5 ft/lbs. (2.3 ~ 2.7 kg-m).
   The six bolts should be tightened evenly.

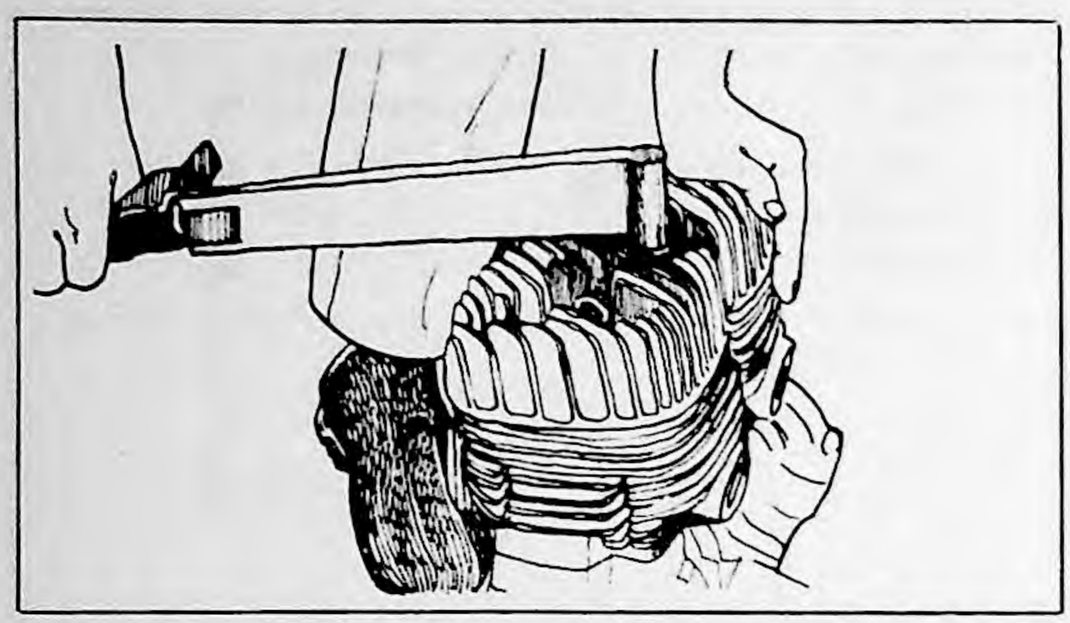

Fig. 7-51

10. Keystone Type Piston and Keystone Ring

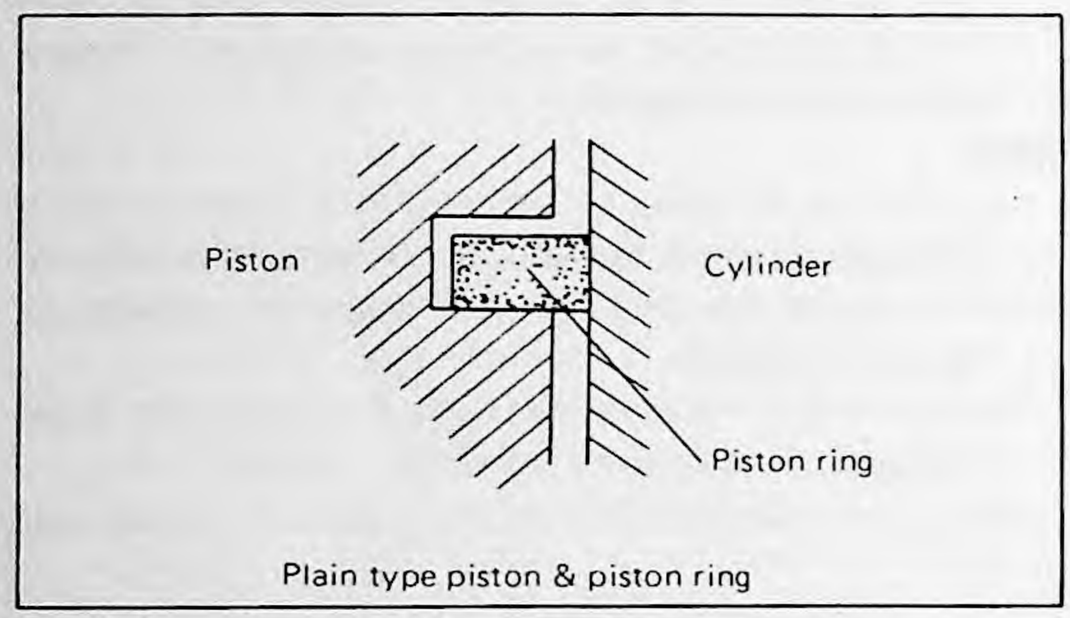

Fig. 7-52

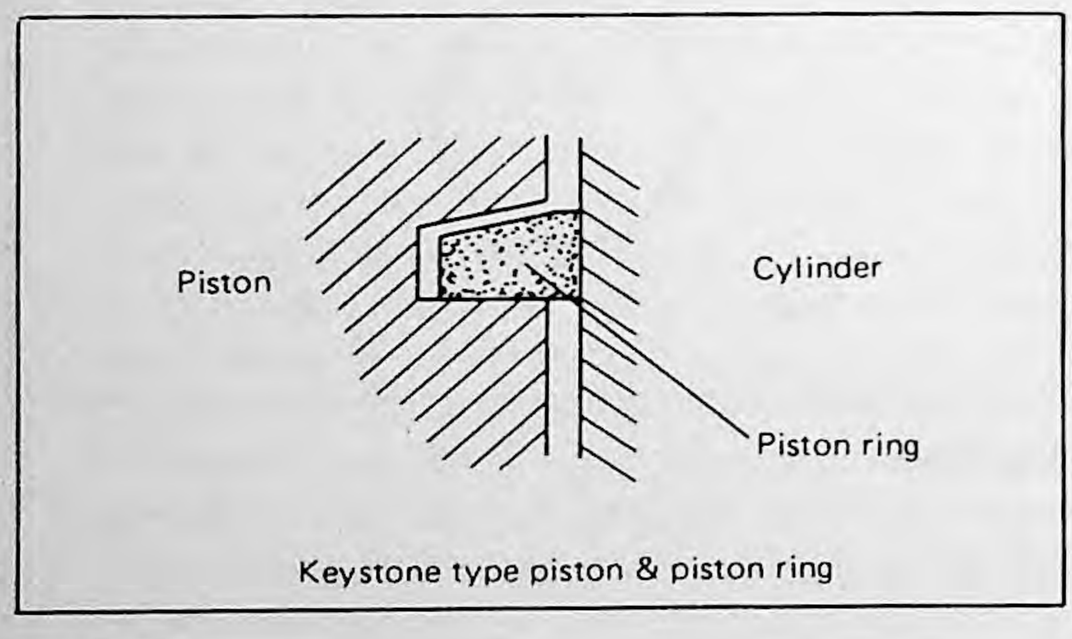

Fig. 7-53

A good seal must be maintained between the piston and cylinder wall for effective use of combustion pressures. It is not practical, however, to attempt to secure a perfect seal. With this in mind, importance is placed on effective sealing and prevention of piston ring sticking. Piston ring sticking is generally caused by gum deposits which are produced through a break down of the fuel and oil from the heat of the combustion process. This gum residue will deposit itself in the ring lands and rings. The subsequent blow-by tends to speed up the accumulation of these gum deposits.

In order to prevent the rings from sticking and to provide more effective sealing of the combustion pressure Yamaha has employed the keystone piston and ring in its engines. This marks the first time such an application has been made in the history of motocycle engineering.

The design of the keystone ring is such that combustion gas pressures force the ring down and out almost simultaneously. This forces the ring tightly against the cylinder wall preventing blow-by. (Fig. 7-54)

On the other hand, in the case of the plain ring, combustion pressure first acts on the top of the ring, forcing it down, and then passes between the ring and piston to force the ring against the cylinder wall: This action is considerably slower than that of the keystone type ring, and will allow more blow-by.

With blow-by, heat cannot be dissipated from the piston ring to the cylinder wall and, as was mentioned earlier, excessive combustion heat will cause the oil film to break down creating additional gum deposits. The keystone ring allows for much better heat transferencœ than the standard type ring.

The most important advantage of the keystone type ring is that the piston ring land clearance changes as the piston moves up and down. Fig. 7-55 and 7-56 show variations in the clearance resulting from the floating action of the piston in the cylinder. This variation in ring land clearance produces a "scrubbing" effect that reduces the accumulation of gum deposits and thus prevents the ring from sticking in the land. Lastly, the outer surface of the ring is coated with Teflon (Fig. 7-56). The Teflon coating serves as an effective aid during ring "seating". In addition, the Teflon coating will follow microscopic irregularities in the Technical Notes on Keystone Rings.

The keystone ring can be handled in the same manner as conventional rings as far as servicing is concerned.

However, the keystone ring is not interchangeable and must be used as a set with a matching keystone piston. The keystone ring can be identified from the conventional by its unique cross-sectional shape. The conventional ring has a rectangular cross-section where conventional ring has a rectangular cross-section where as the keystone ring employs a 7° slope on the top.

Important:

The keystone type piston has the "K" mark stamped after the numerals indicating the piston size on its head. The keystone type piston ring has a symbol such as "1(2)N" or "1(2)T".
(Numeral "1" denotes the 1st ring, and Numeral "2" the 2nd ring.)

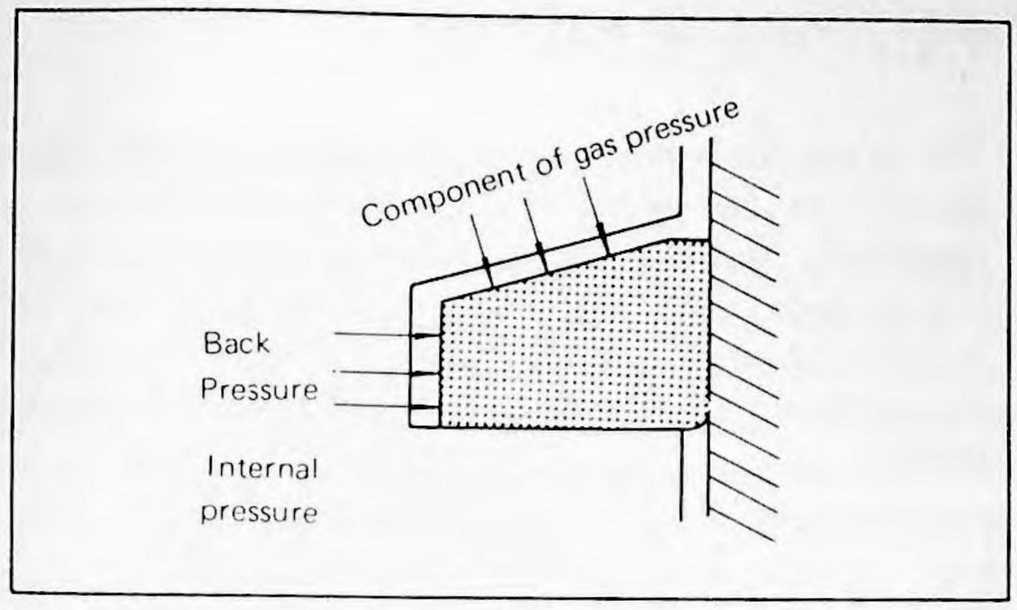

Fig. 7-54

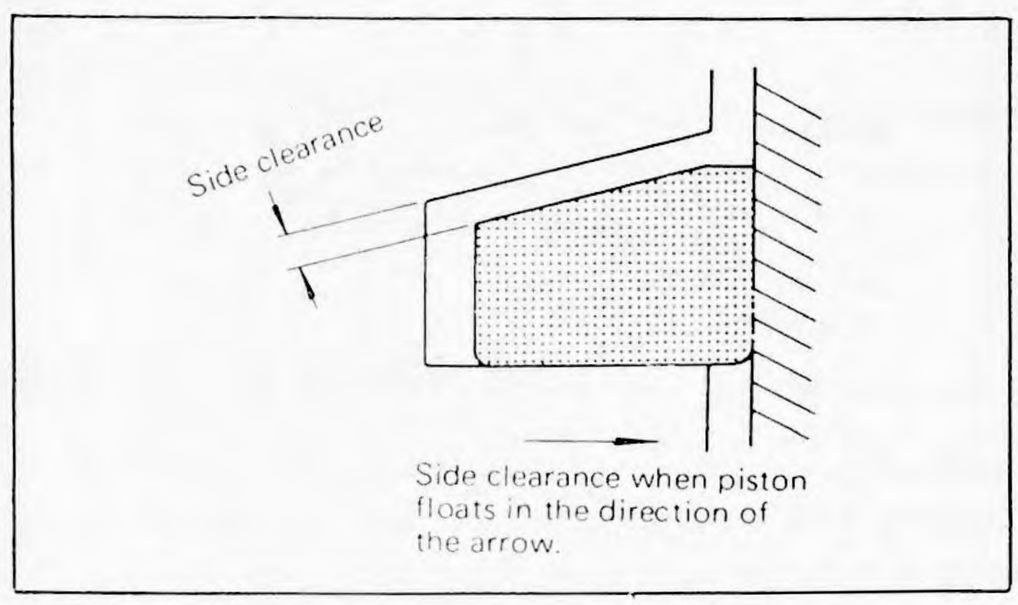

Fig. 7-55

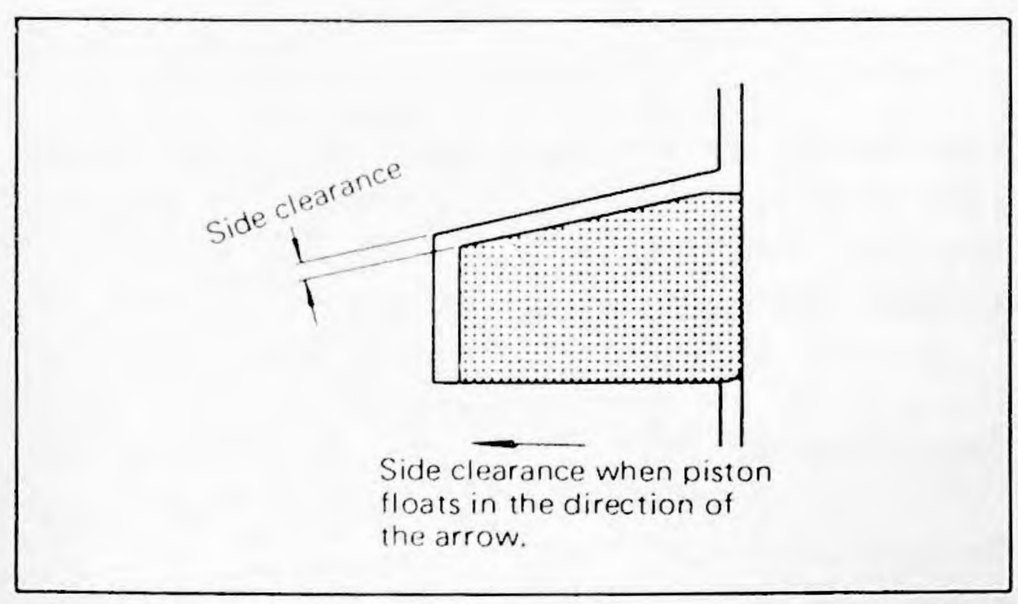

Fig. 7-56

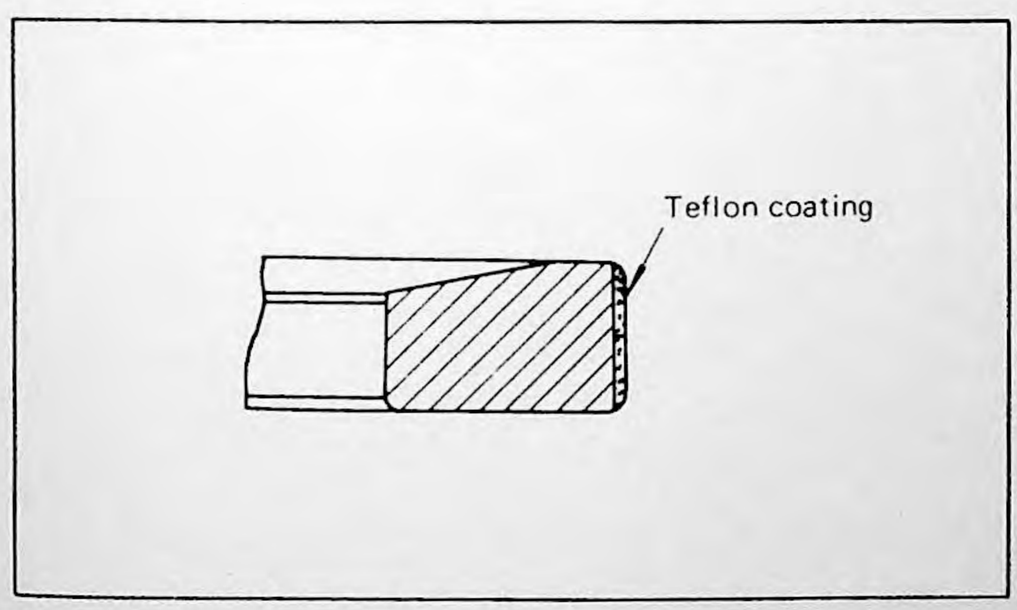

Fig. 7-57

7–5 PISTON AND PISTON RING MAINTENANCE (GP338, GP433B)

7–5–1

The L-shaped piston rings featuring the following three improvements:

(1) Better sealing
(2) Higher output
(3) Improved radiant efficiency

7–5–2

Remove the piston ring from the piston, and place it in the cylinder so that it is in tight contact with the cylinder wall. By using the piston head, position the ring in parallel to the cylinder top edge. Measure the ring end gap with a feeler gauge. If the gap measured is in the range of 0.0012 to 0.002" (0.3 to 0.5 mm), the ring is in satisfactory condition. If more than 0.002" (0.5 mm), the ring face is excessively worn.

Remove the ring from the cylinder and keep it in a free position. Then, measure the ring end gap. If the gap measured is less than 0.0012" (0.3 mm), the ring is considered to be fatigued with heat. Replace it with a new one; otherwise, power loss or ring breakage may result. When installing a ring on the piston, avoid opening the end gap apart more than 0.627" (16 mm), because the ring may break.

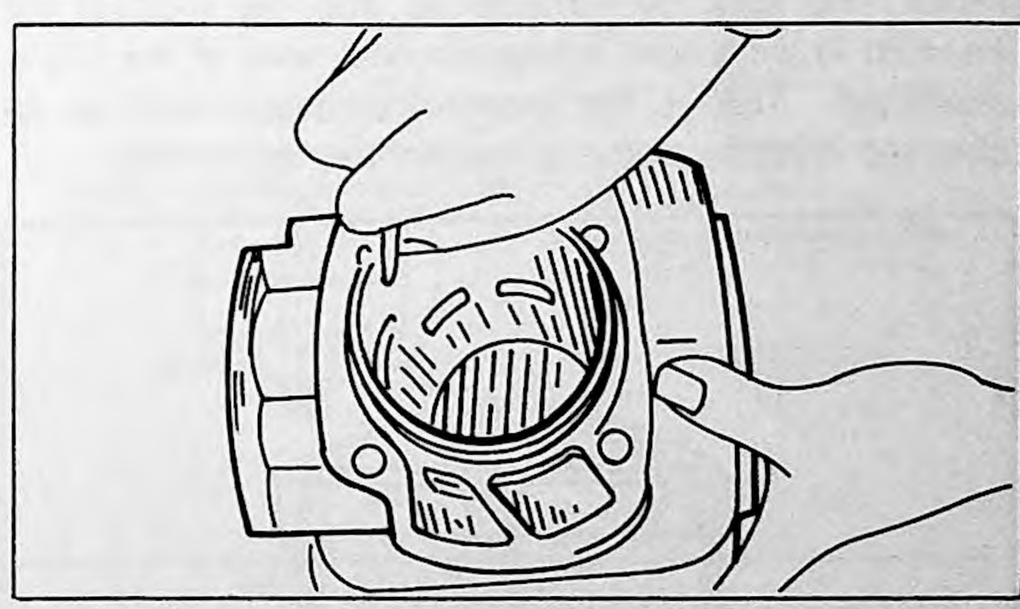

Fig. 7-58

7–5–3

In addition to the description referring to the judgement of the condition of piston rings, the following check-ups should be made:

(1) Check the piston ring for sticking to the piston groove.
(2) Check for scuffing by the piston rings.
(3) Check the piston ring face for contact with the cylinder wall.
(4) Check the piston ring bottom for contact with the groove.

Remedies:

(1) If any piston ring is found stuck, poor sealing will result.

(2) If the cylinder wall is scuffed, poor sealing will result as in the case of the piston ring being stuck. In the above two cases, the piston ring should be replaced with a new one, and at the same time, the cylinder wall should be checked for scratches.

(3) Whether the contact between the piston ring and the cylinder wall is good or not will have a great effect on sealing. The entire area of the piston ring face must be in tight contact with the cylinder wall. If excess wear is found on the upper or the lower half of the piston ring face, the piston ring groove is considered to be worn unevenly, causing the ring to twist. (See Fig. 7-60)
If imitation piston rings (other than genuine Yamaha parts) are used, such defects as mentioned in (3) and (4) above may easily occur, and in the worst case, serious engine troubles may result.

(4) When a good seal between the piston ring bottom and the ring groove bottom is noticed, the piston ring is considered to smoothly slide in and out on the ring groove bottom in a correct manner.

7–5–4

Before replacing the piston ring, remove carbon accumulations from the gap between the ring and the groove. The piston ring must be installed so that the locating pin knocked in the groove is between both ends of the ring as illustrated. This is the most vital requirement to be observed when the piston is inserted into the cylinder.

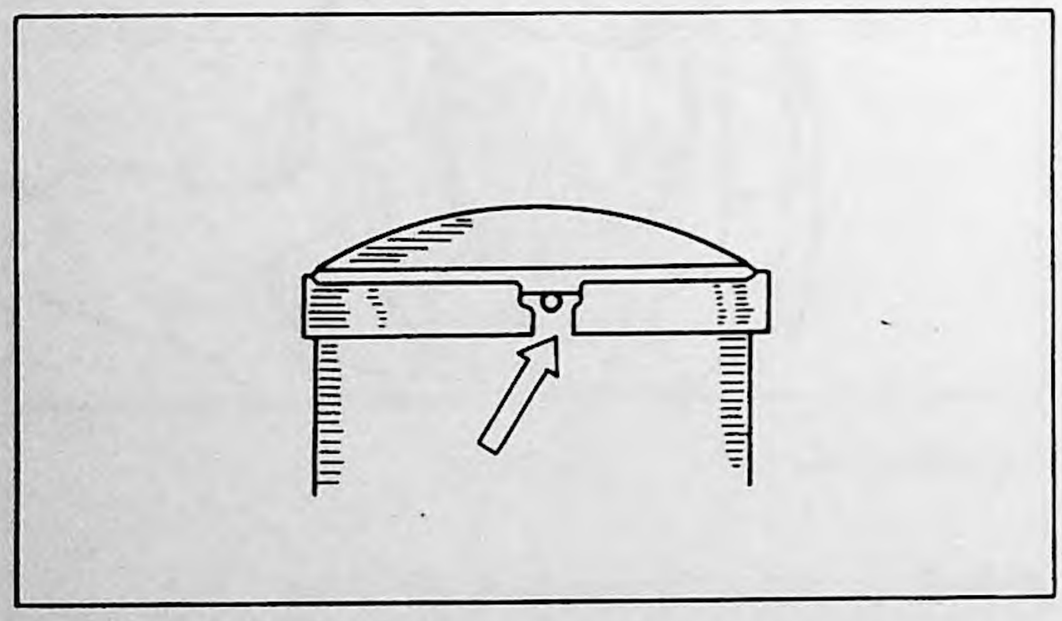

Fig. 7-59

7–5–5

The up and down movement of the piston ring in the piston groove can be calculated from the side clearance as illustrated. This side clearance is created by wear on the ring bottom. If the side clearance is measured more than 0.2 mm, the ring should be replaced. The illustration shows the sectional view of a new piston ring installed in the ring groove.

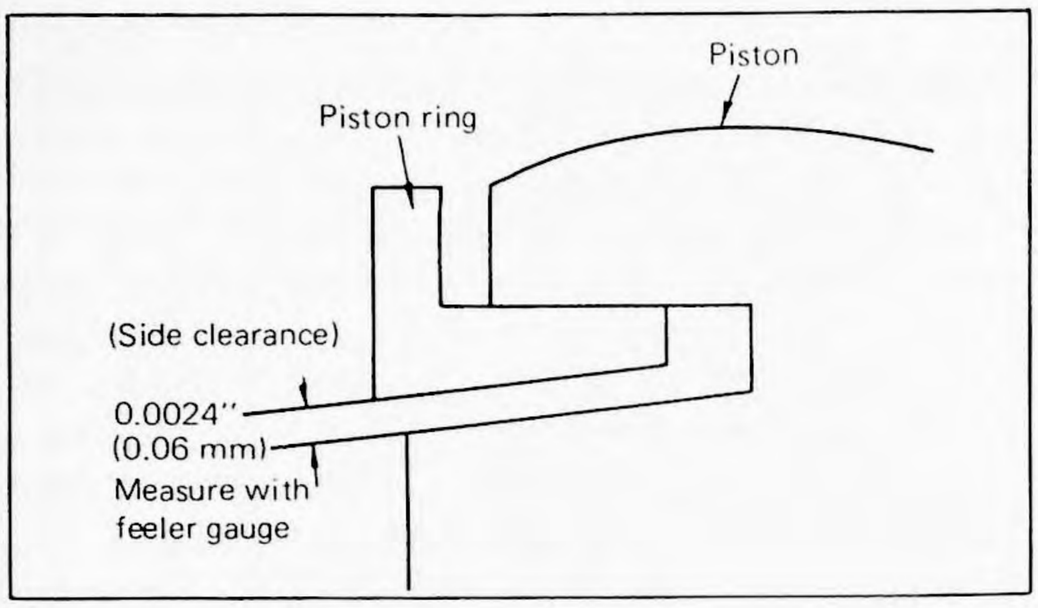

Fig. 7-60

CHAPTER 8. DRIVE TRAIN AND CHASSIS MAINTENANCE

8–1 PRIMARY SHEAVES

Very little maintenance of the primary sheaves is necessary, however, periodic removal, checking and lubrication is advisable. The mating surfaces of the crankshaft and the sliding sheave should be lubricated with molybdenum disulfide grease. Any warpage of either the primary fixed sheave or primary sliding sheave might indicate improper primary spring tension. The four counterweight hooks inside the primary sheave cap should be periodically lubricated at their pivot points with a graphite spray lubricant.

Caution:

Excessive amounts of lubricant on the primary sheave will be transferred to the "V" belt and slippage may occur at engagement speed.

8–2 SECONDARY SHEAVES

After approximately 40 hours riding time, sliding secondary sheave should be removed and the secondary shaft greased. This will keep the sheave from binding up from lack of lubrication.

8–3 DRIVE-BELT

Tension of the drive-belt is adjusted by maintaining a pre-determined distance between the centers of the primary and secondary sheaves. It should be 10.8" (270 mm). Adjustment is made by shifting the engine after loosening the four mounting bolts.

Note:

New belt width is 1.24" (31 mm). Replace the belt it is worn to a width of 1.04" (26 mm).

8–4 PRIMARY SHEAVE AND SECONDARY SHEAVE ALIGNMENT

The two sheave assemblies must be parallel with one another for the drive-belt to obtain maximum grip and minimum wear. Use the special sheave gauge that comes in our special tool kit.

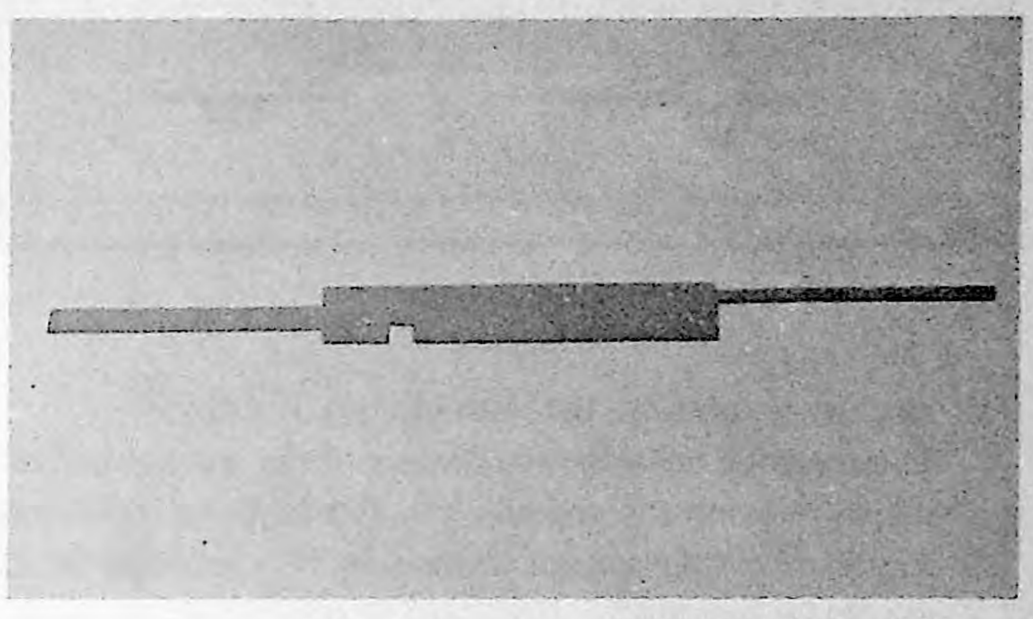

Fig. 8-1

Each sheave must be adjusted at two points.

(1) Distance between centers of sheaves.
Adjust the distance between the centers of the primary shaft and the secondary shaft to 10.8" (270 mm).

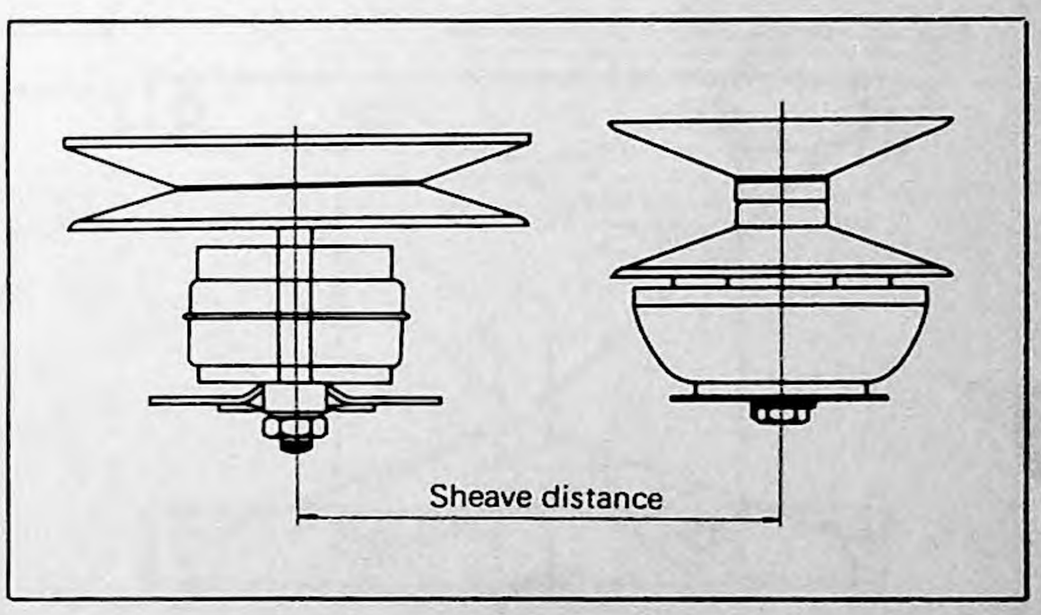

Fig. 8-2

(2) Adjust the off-set between the primary fixed sheave and the secondary sliding sheave as specified. The amount of off-set varies from model to model.

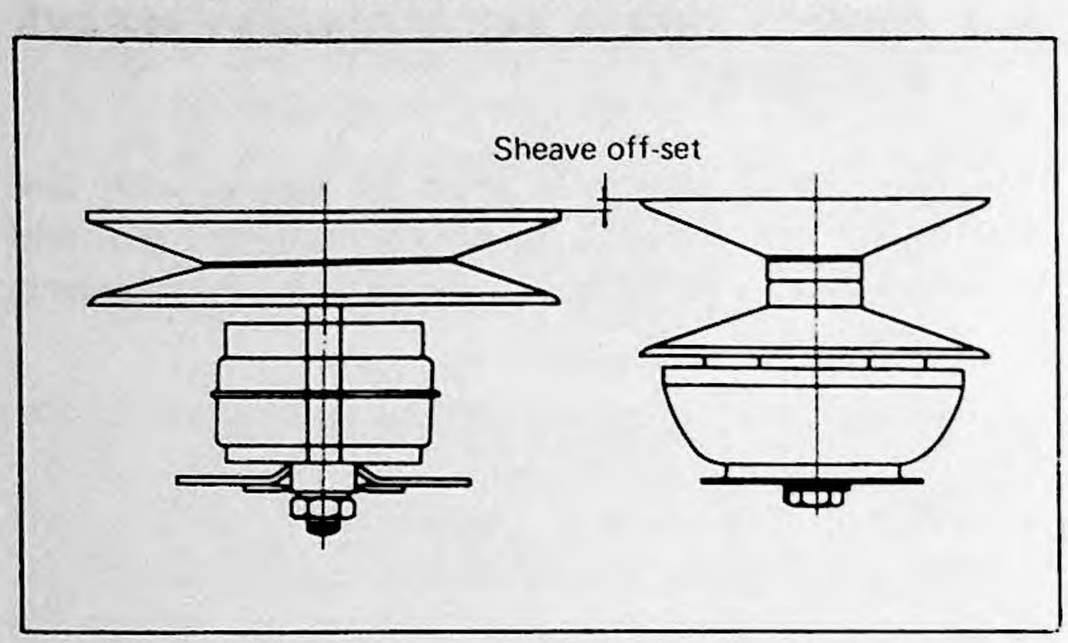

Fig. 8-3

(3) How to set distance between centers of sheaves.
The distance between the centers of the sheaves can be set by moving the engine back and forth to move the engine, the four engine lower bracket mounting bolts should be loosened.

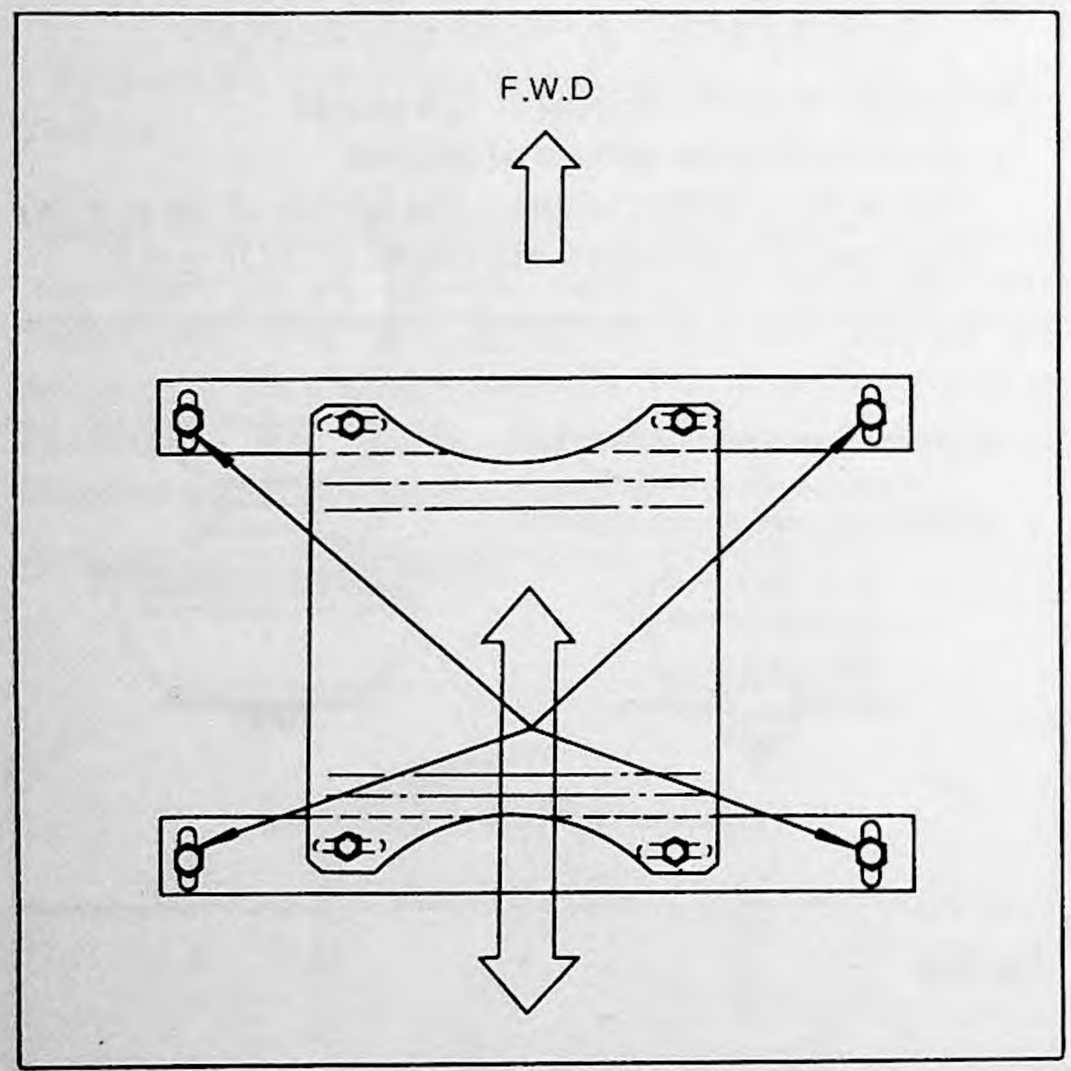

Fig. 8-4

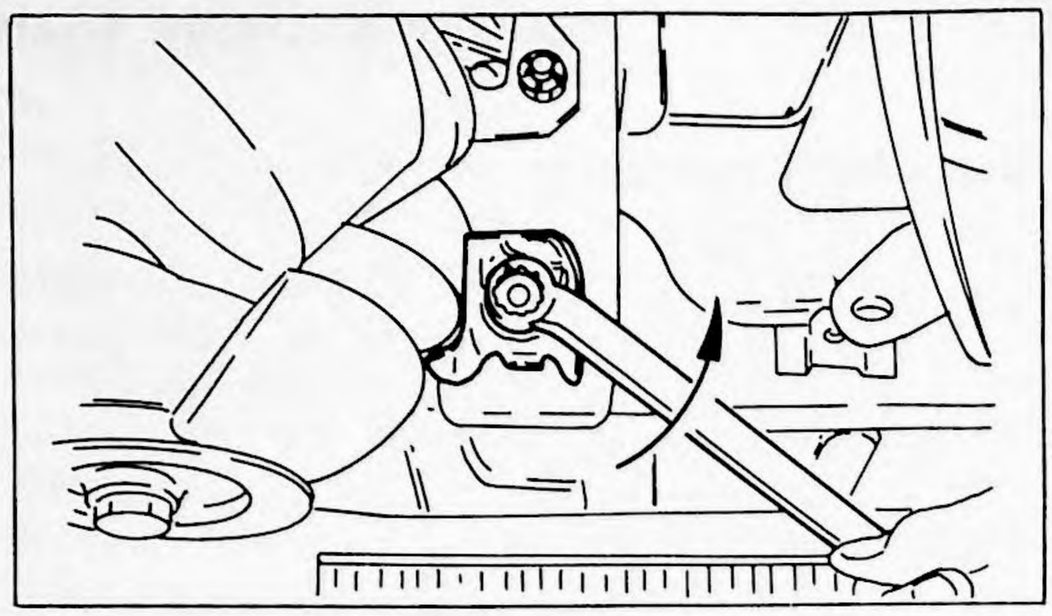

Fig. 8-5

(4) How to set the off-set between sheaves.
The sheave off-set can be set by moving the engine sideways.
To move the engine, the four engine upper bracket mounting bolts should be loosened.

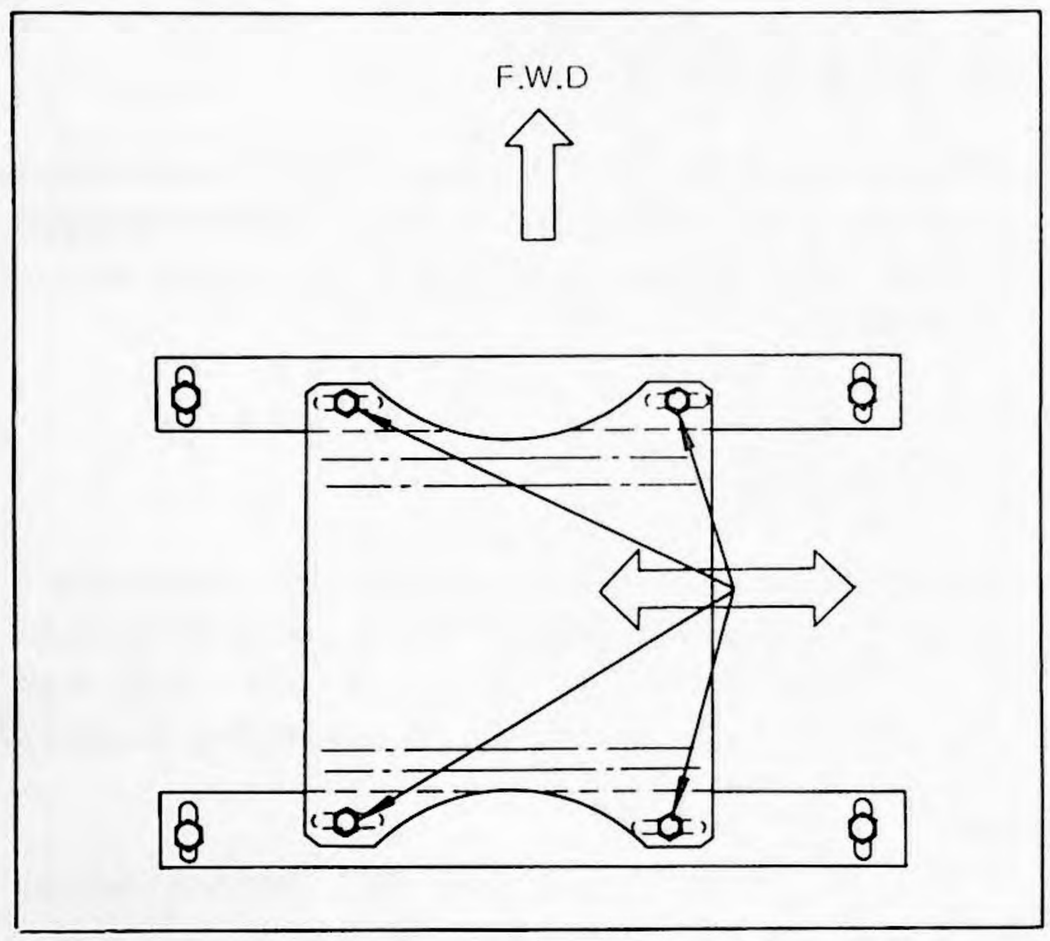

Fig. 8-6

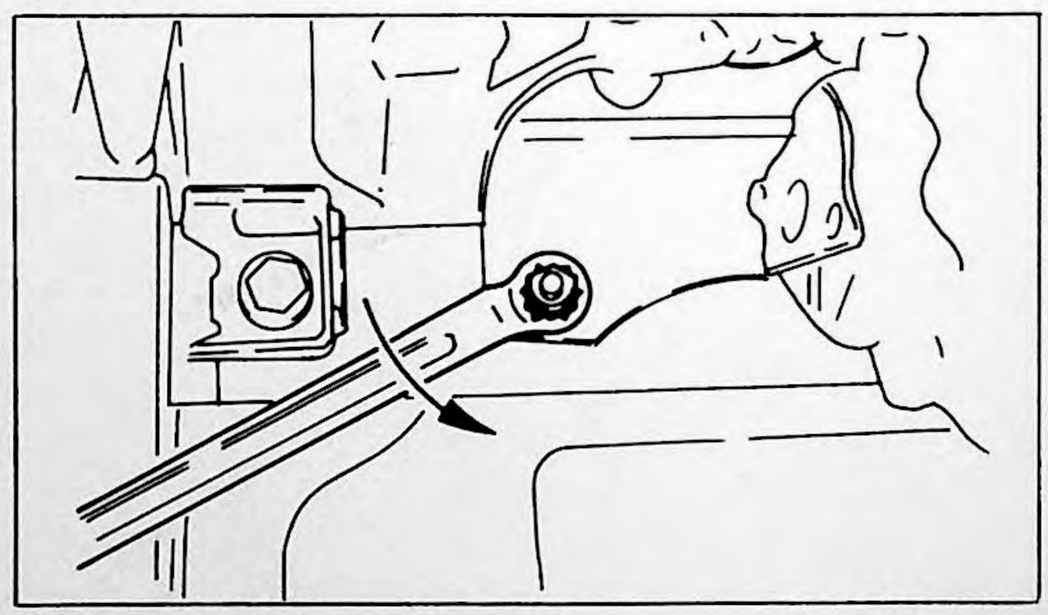

Fig. 8-7

(5) Using the sheave gauge.

(a) Sheave off-set

Remove the V-belt, and allow the secondary sliding sheave to contact the secondary fixed sheave. Then, as illustrated, place the sheave gauge against inner sheave surfaces.

If the sheaves are parallel, the gauge will touch at all four spots (See arrows).

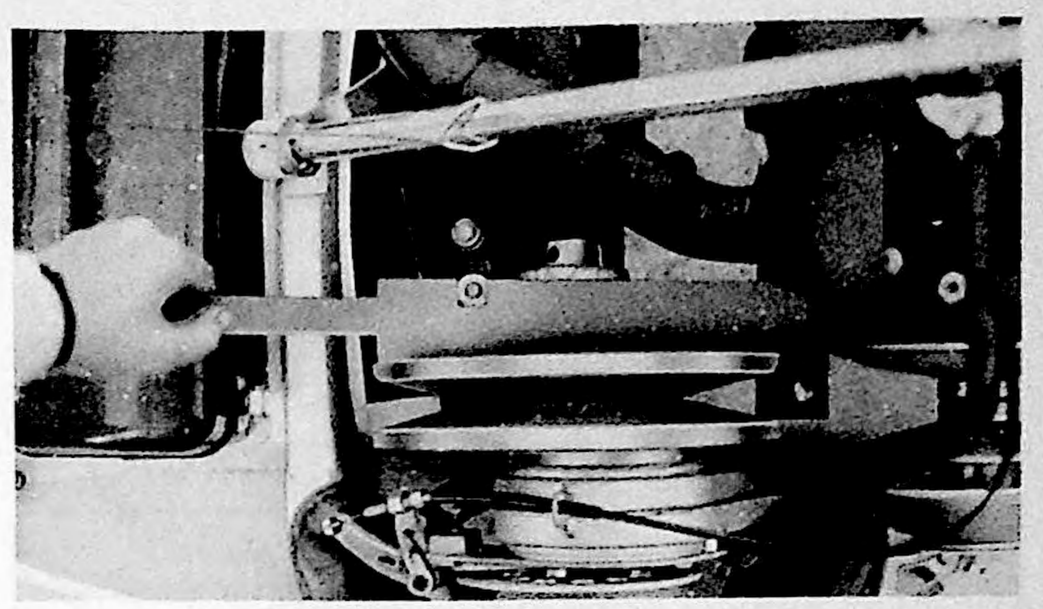

Fig. 8-8

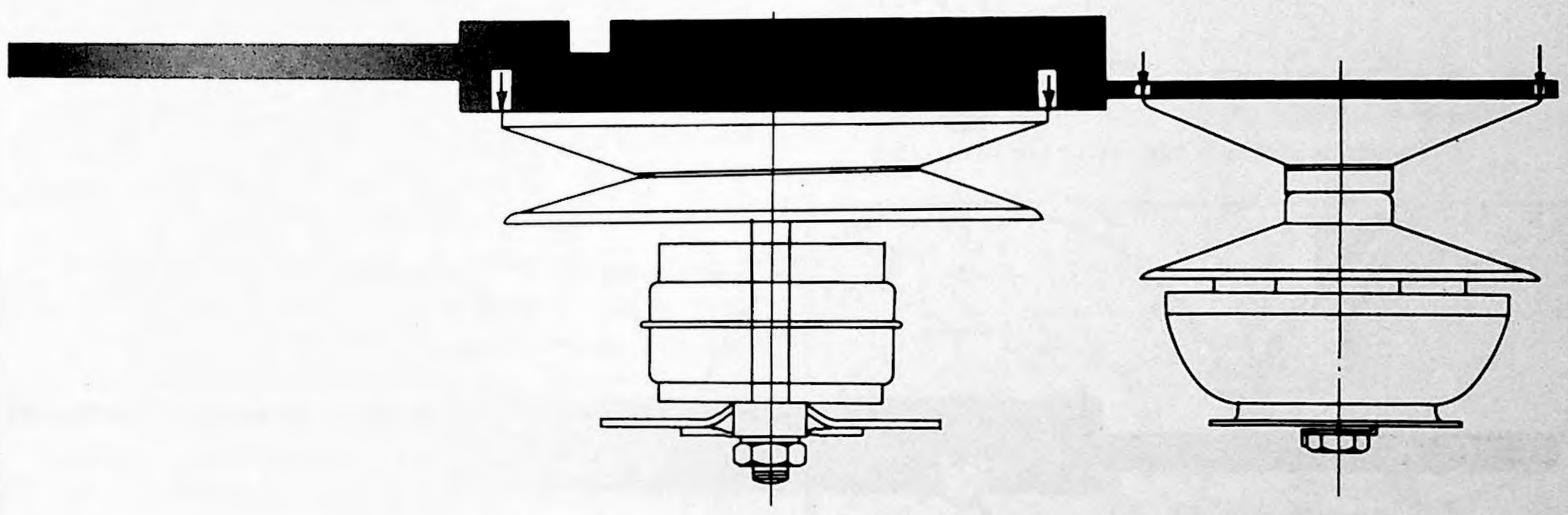

Sheave off-set

Fig. 8-9

(b) Distance between sheaves
Remove the V-belt, and push apart the secondary sliding sheave. Then, measure the distance between the primary shaft and the secondary shaft by placing the 9.2 in. (233 ± 0.1 mm) scale side of the sheave gauge between the shafts. If both sheave shafts contact the sheave gauge at the positions indicated by arrows, the distance is correct.

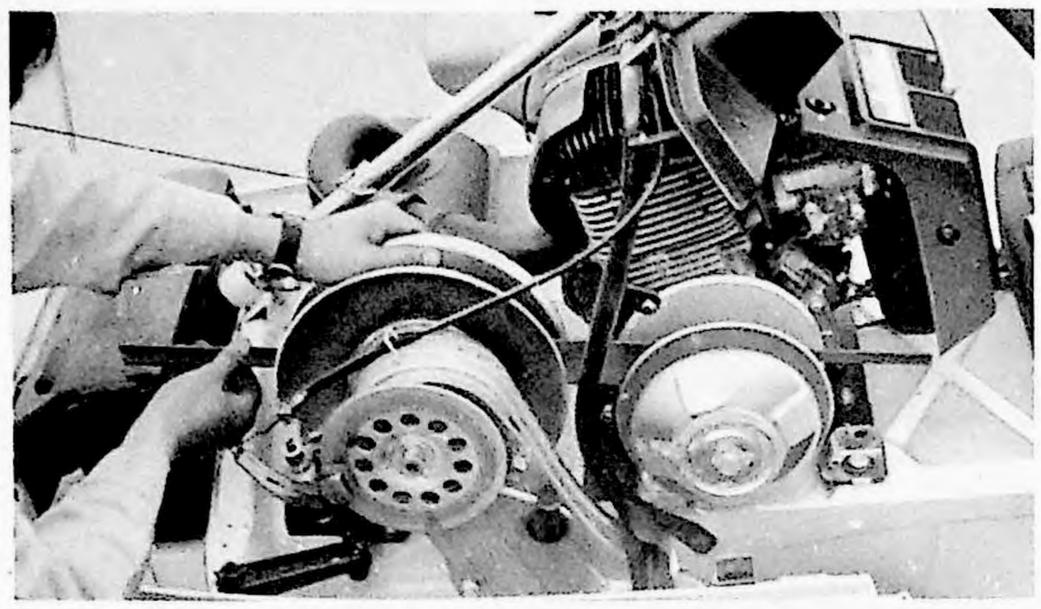

Fig. 8-10

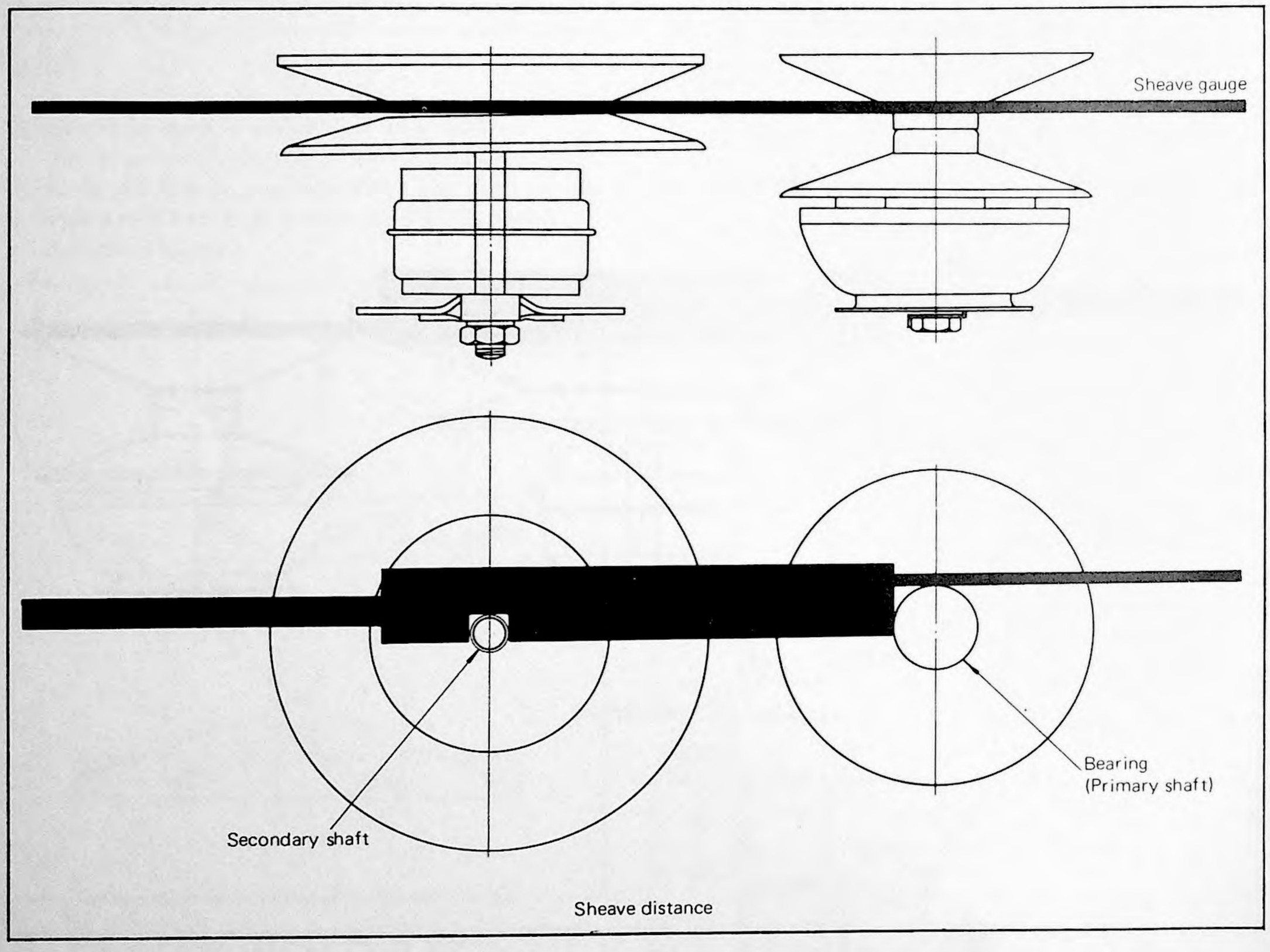

Fig. 8-11

8–5 CHAIN AND CHAIN CASE

1. Every 40 hours the drive chain tension should be adjusted. Remove the rubber oil filler tube located near the center of the chain case. Reach through the filler hole with your fingers and feel the chain free play. Without pushing hard in either direction, the chain should have 0.4" (10 mm) movement. If the chain requires an adjustment, then follow this procedure: loosen the two hold-down bolts (see arrows); grasp the secondary shaft housing at the brake mounting flange and lift up or push down, depending on the adjustment needed; check the chain for proper free play and tighten the bolts. Make a final tension check.

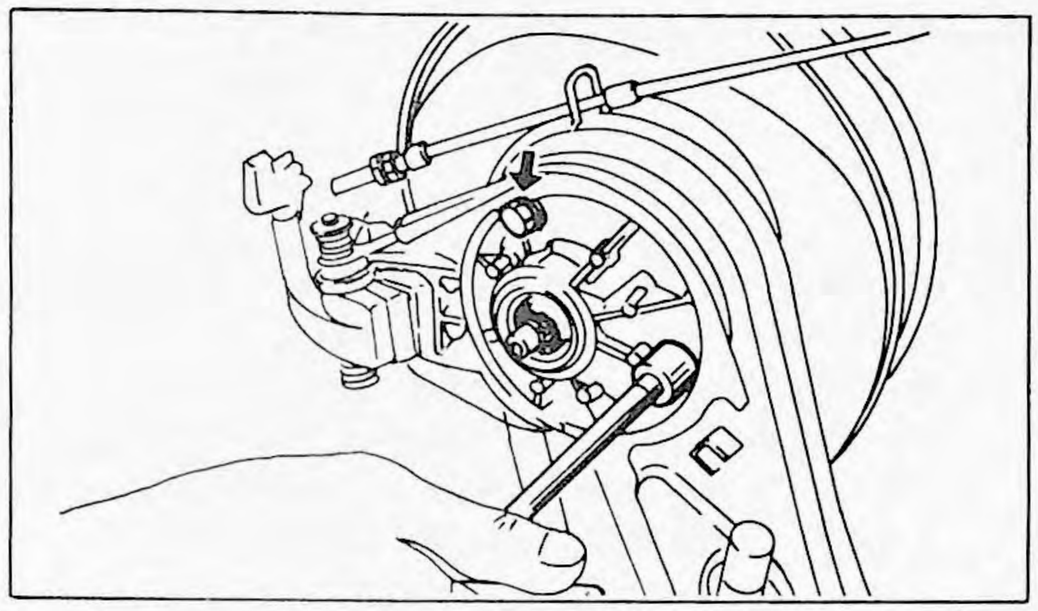

Fig. 8-12

2. The cover located at the bottom of the chain case has a window in it to check for proper oil level. The oil level should be 'topped up' (fill through the rubber oil filler tube) to maintain the oil level near the top of the window. Never let the oil level drop below the window bottom. If the chain case oil is emptized completely, then refill with 500 c.c. (17 oz.) of 10W/30 motor oil.

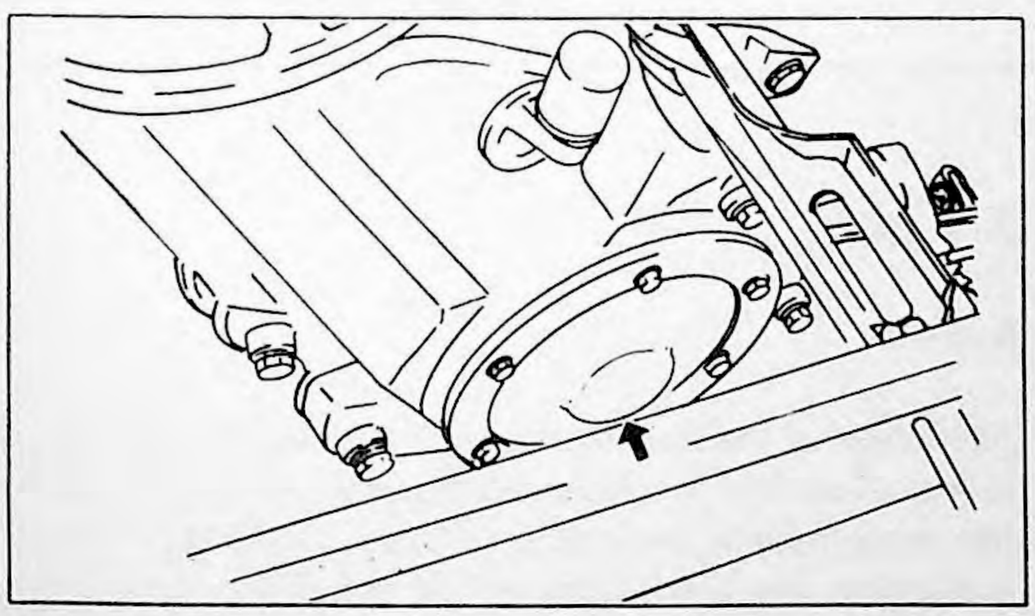

Fig. 8-13

8–6 BRAKES

The brake pads should each be adjusted to within 0.40" (1 mm) of the brake disc.

1. This picture shows how to adjust the inner brake pad. There is a bolt and lock nut assembly. Back off the lock nut and screw in the bolt, forcing the pad toward the disc. Cinch down the lock nut.

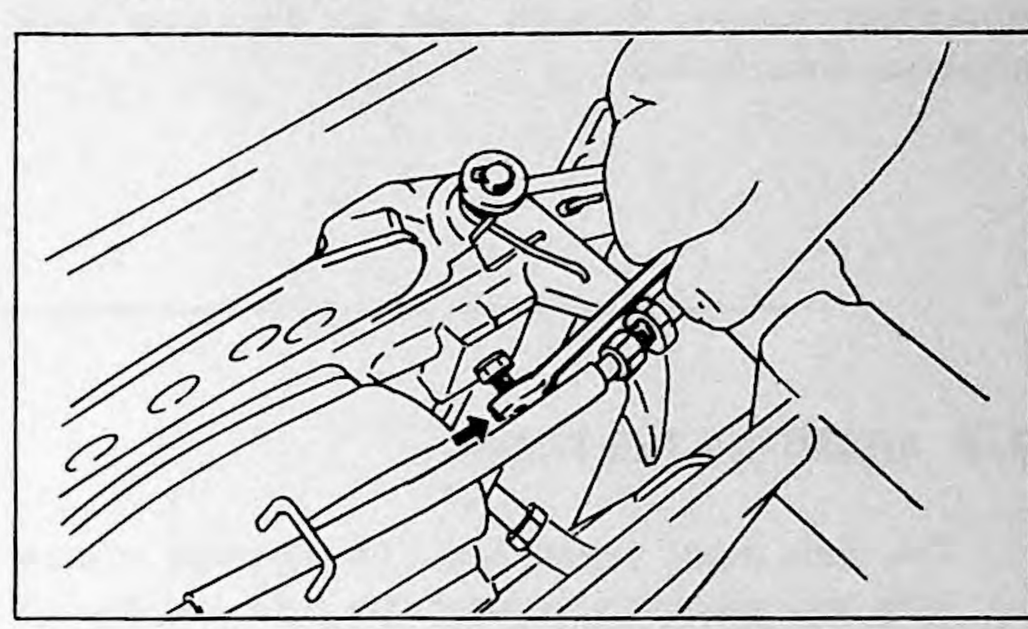

Fig. 8-14

2. Adjustment for the outer pad is located at the end of the brake cable. Back off the lock nut and adjust the cable until the brake pad is within tolerance.

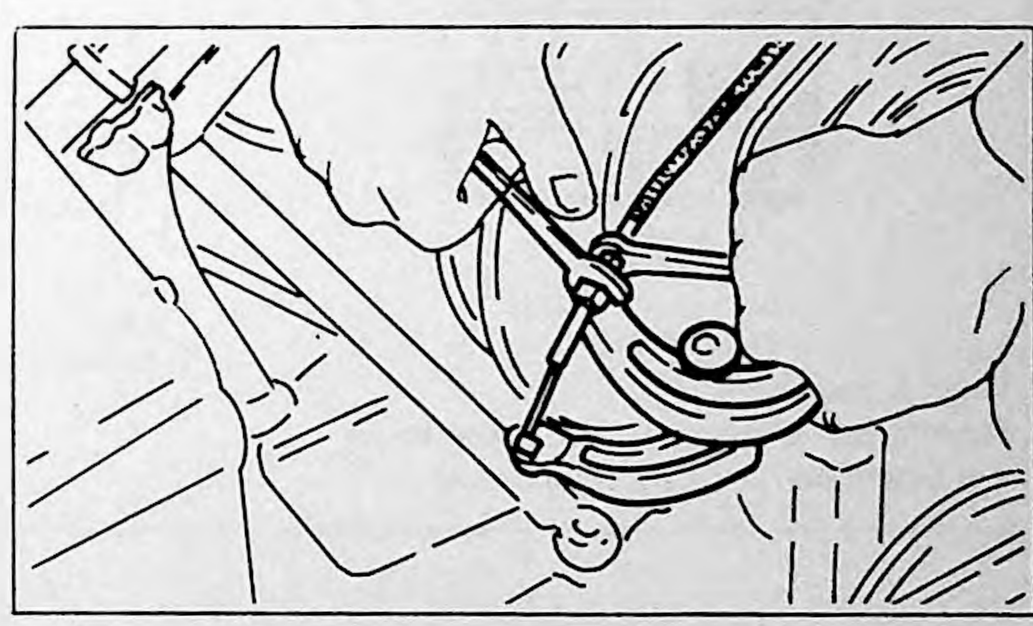

Fig. 8-15

8–7 TRACK

The track should be checked for correct adjustment before any long trip and after replacement.
Check the track tension as shown in the picture. The deflection should be 1" (25 mm) (15" track) 0.6" (15 mm) (18" track) when pulled by a 22 lbs. (10 kg) force. Loosen pivot arm nuts on right and left sides and make adjustment to bring the slack within tolerance. Be sure to make adjustment equally to each side so that basic track alignment is maintained.

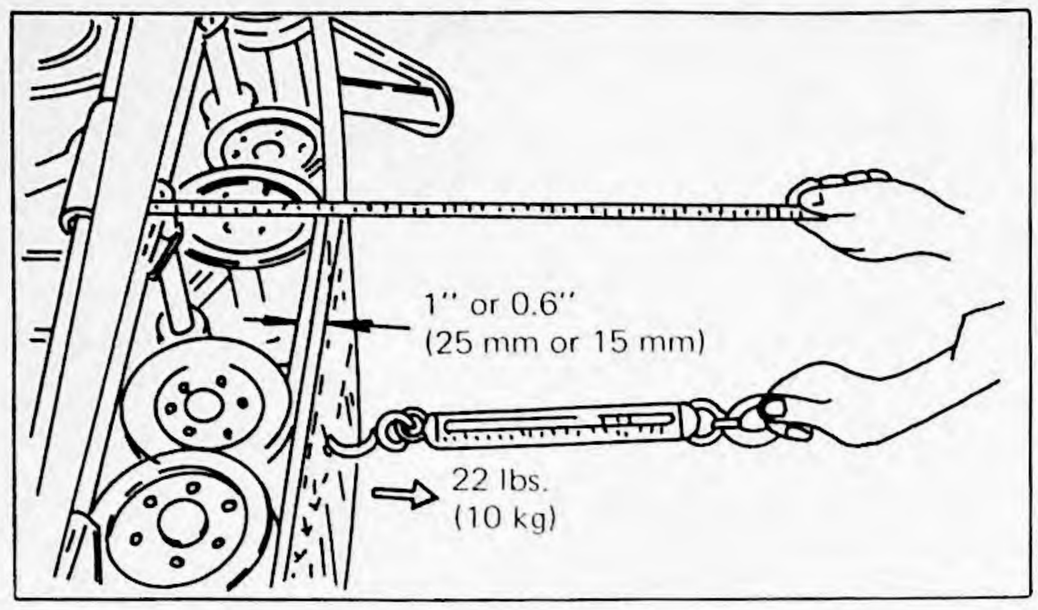

Fig. 8-16

8–8 ADJUSTING THE TRACK

1. The track adjust screws should be tightened little by little and alternately between the right and the left sides. If they are tightened one by one and with a quick motion, the rear arm may be deformed.
2. The tension of the track should be adjusted, with the rear pivot screw nut loosely tightened.
3. The deflection of the track should be 1" (25 mm), when pulled by a 22 lbs. (10 kg) force.
4. Turn the track by running the engine with the rear of the machine raised, and make sure that the tension of the track is even at both sides. If the tension is uneven, it should be adjusted in the following manner.

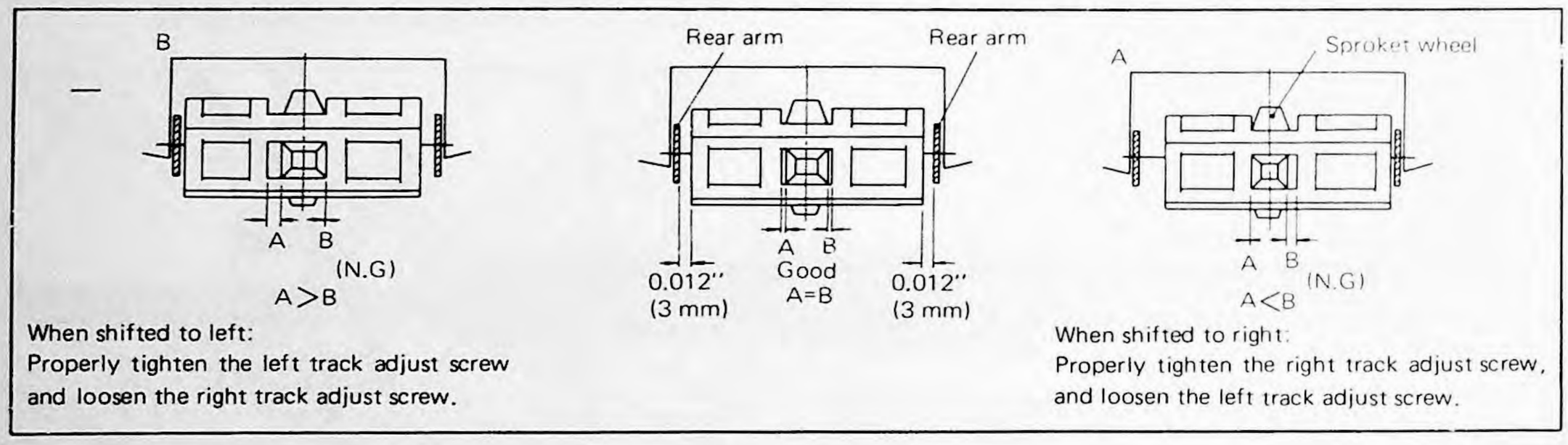

Fig. 8-17

5. After the track tension is adjusted correctly, the clearance between the track and the rear arm should be about 0.012" (3 mm).
   The amount of clearance should be equal at both right and left tracks.
6. There must be a clearance between the frame and the rear arm so that the rear arm can operate correctly.
7. Fully tighten the rear pivot bolt nuts, and retighten the track adjust bolts. To prevent the nut from becoming loose, drive a cotter pin into the rear pivot screw. Then, bend the adjust screw lock washer to lock the adjust screw.

Note:
If the track shows excessive wear, it should be replaced. Also, if the reinforcement rods are exposed, the track should be replaced and alignment checked prior to running the new track.

8–9 SKIS

8–9–1

Tighteness of the steering column to the ski linkage system is very important in controlling parallelism of the skis while the snowmobile is in motion. Skis are supported on two 5 leaf springs that are pivoted at the rear of the ski and free to expand and contract by being set in a wear plate at the front part of the ski. This wear plate should be greased often to reduce friction on the spring and wear plate.

8–9–2

Parallelism of the skis is checked by measuring from center to center (outside of one ski to inside of other ski). Adjustment of parallelism is accomplished by adjusting the tie rod length. Correct center to center distance of the skis is 24.1" (613 mm).

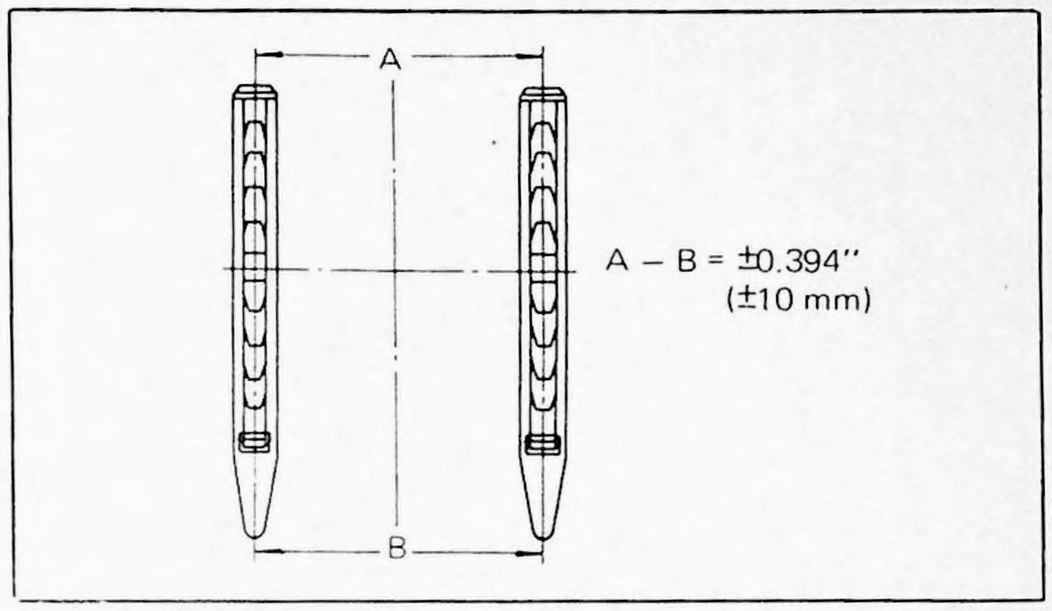

Fig. 8-18

Note:

Measure the distance between the skis (center to center) at the front ends and at the rear ends, respectively. If the difference of the value measured exceeds ±0.4" (±10 mm), adjustment is required.

APPENDIX 1. INSPECTION AND MAINTENANCE

INSPECTION

No.	DESCRIPTION	20 HR.	40 HR.	80 HR.	Seasonally
1	Tighten bolts/nuts	X			
2	Cracks or breakage	X			
3	Oil leakage	X			
4	Ignition timing	X			
5	Abnormal noise	X			
6	Lights and wiring	X			
7	Brake functioning	X			
8	Chassis reinforcements	X			
9	Power train	X			
10	Chain housing lubricant	X			
11	Chain tension		X		
12	Track tension		X		
13	Bolts/nuts re-tightening		X		
14	Ski alignment		X		
15	Removal of carbon				
	(complete) Spark plug	X			
	Cylinder head &				X
	Piston dome		X		
16	Cleaning/inspection of carburetor				X
17	Lubrication		X		

MAINTENANCE

1. (1) Use Yamalube, or (2) a good 20 or 30 weight two-cycle oil for air-cooled engines, or (3) a quality, detergent, automotive 10W-30 oil (in that order of preference).
2. The factory recommends Aeroshell Grease #7 which is a synthetic aircraft lubricant having a useful temperature range to −100°F.
3. The factory recommends a molybdenum - disulfide grease. Shell Lithal MDS Grease and Aeroshell Grease #17 conform roughly to these specifications.
4. 10W-30 detergent automotive motor oil.
5. The factory recommends Shell Alvania #2 or #3 which is a moderately heavy, smooth, lithium soap base grease. All purpose.

ITEM	PERIOD			
	When Nec.	40 hours	80 hours	Seasonally
Autolube	1			
Autolube Pump Control Box				2
Primary Sheave Shaft			3	
Primary Sheave Weight Pivot Points			4	
Secondary Sheave Shaft			3	
Chain Case	4			4
Steering Bearings (two)			5	
Ski Pivot Points and Columns		5		
Ski Wear Plates		5		
Bogie Wheel Ass'y Pivot Points				5
Drive Axle Bearing (R)				5
Rear Axle Pivot Points				5
Guide Wheel Bearings				5

APPENDIX 2. CONVERSION TABLE

LENGTHS					
Multiply	By	To Obtain	Multiply	By	To Obtain
Millimeters (mm)	0.03937	Inches	Kilometers (km)	0.6214	Miles
Inches (in.)	25.4	Millimeters	Miles (mi.)	1.609	Kilometers
Centimeters (cm)	0.3937	Inches	Meters (m)	3.281	Kilometers
Inches (in.)	2.54	Centimeters	Feet (ft.)	0.3048	Meters
WEIGHTS					
Kilograms (kg)	2.205	Pounds	Grams (q)	0.03527	Ounces
Pounds (lbs.)	0.4536	Kilograms	Ounces (oz.)	28.35	Grams
VOLUMES					
Cubic centimeters (cc.)	0.061	Cubic inches	Imperial gallons	77.26	cu.in.
Cubic inches (cu.in.)	16.387	c.c.	Liters (ℓ)	1.057	Quarts
Liters (ℓ)	0.264	Gallons (U.S.)	Quants (qt.)	0.946	Liters
Gallons (gal.) (U.S.)	3.785	Liters	Cubic centimeters (c.c.)	0.0339	Fluid ounces
U.S. gallons	1.2	Imperial gals.	Fluid ounces (fl.oz.)	29.57	cc.
Imperial gallons	4.546	Liters			
OTHERS					
Metric horsepower (ps.)	1.014	bhp.	Foot-pounds (ft-lbs.)	0.1383	kg-m
Brake horsepower (bhp.)	0.9859	ps.	Kilometers per liter (km/ℓ)	2.352	kg-m
Kilogram-meter (kg-m)	7.235	Foot-pounds	Miles per gallon (mpg)	0.4252	km/ℓ

YAMAHA MOTOR CO., LTD.

SINCE 1887

HAMAMATSU, JAPAN

PRINTED IN JAPAN
'72 · 7 - 5.1 x 1 (G)