YAMAHA

SNOWMOBILE

GPX338F/GPX433F

SERVICE MANUAL

YAMAHA MOTOR CO., LTD.

878-28197-1[illegible]

TABLE OF CONTENTS

CHAPTER 1. GENERAL 1
- 1-1. Specifications 1
- 1-2. Service Data 1
- 1-3. Tools 1

CHAPTER 2. ENGINE 5
- 2-1. Removing the Engine 5
- 2-2. Starter 6
  - 2-2-1. Removal 7
- 2-3. Primary Sheave 7
  - 2-3-1. Disassembly 8
  - 2-3-2. Cleaning and Inspection 9
  - 2-3-3. Assembly 9
- 2-4. C.D.I. Magneto 11
  - 2-4-1. Removal 12
- 2-5. Carburetor 14
  - 2-5-1. Removal 15
  - 2-5-2. Disassembly (GPX338F) 16
  - 2-5-3. Cleaning and Inspection (GPX338F) 17
  - 2-5-4. Assembly (GPX338F) 18
  - 2-5-5. Installation (GPX338F) 18
  - 2-5-6. Adjustments (GPX338F) 18
  - 2-5-7. Disassembly (GPX433F) 20
  - 2-5-8. Cleaning and Inspection (GPX433F) 20
  - 2-5-9. Assembly (GPX433F) 21
  - 2-5-10. Installation (GPX433F) 21
  - 2-5-11. Adjustments (GPX433F) 21
  - 2-5-12. Carburetor with Accelerator Pump (GPX433F) 23
- 2-6. Oil Pump 24
- 2-7. Engine 26
  - 2-7-1. Disassembly 26

CHAPTER 3. POWER TRAIN 29
- 3-1. Secondary Sheave 29
  - 3-1-1. Removal 30
  - 3-1-2. Cleaning and Inspection 30
  - 3-1-3. Assembly 30
  - 3-1-4. Adjustments 33
- 3-2. Disc Brake 35
  - 3-2-1. Removal 36
  - 3-2-2. Cleaning and Inspection 36
  - 3-2-3. Installation 36
  - 3-2-4. Adjustments 37
- 3-3. Chain Housing 38
  - 3-3-1. Removal 39
  - 3-3-2. Cleaning and Inspection 39
  - 3-3-3. Assembly 40

3-4. Front Axle 41
3-5. Rear Axle 42
3-6. Sliding Suspension 43

CHAPTER 4. STEERING (SKI) AND CHASSIS 45
4-1. Frame 46
4-2. Engine Mount 48
4-3. Oil and Fuel 48
4-4. Ski 48
4-5. Steering 48
4-6. Control Wires 48
4-7. Shroud 48

CHAPTER 5. ELECTRICAL SYSTEM 49

CHAPTER 6. TIGHTENING TORQUE 57

CHAPTER 1. GENERAL

1-1. Specifications

Model	GPX338F	GPX433F
Dimensions & Weight:		
Overall length (including the ski)	98.8 ins. (2,510 mm.)	98.8 ins. (2,510 mm.)
Overall width	39.8 ins. (1,010 mm.)	39.8 ins. (1,010 mm.)
Overall height (including the windshield)	38.0 ins. (965 mm.)	38.0 ins. (965 mm.)
Engine:		
Type	Two-stroke five-port induction aluminum cylinder	Two-stroke five-port induction aluminum cylinder
No. of cylinders & arrangement	Parallel twin	Parallel twin
Displacement	20.62 cu.in. (338 c.c.)	26.42 cu.in. (433 c.c.)
Bore & stroke	2.362 x 2.346 ins. (60 x 59.6 mm.)	2.677 x 2.346 ins. (68 x 59.6 mm.)
Cooling system	Natural air cooled	Natural air cooled
Lubrication system	"Autolube" oil injection	"Autolube" oil injection
Oil tank capacity	2.4 qts. (2.25 lits.)	2.4 qts. (2.25 lits.)
Starting System:	Recoiled hand starter	Recoiled hand starter
Fuel System:		
Fuel	Gasoline (high-octane)	Gasoline (high-octane)
Fuel tank capacity	6.0 US.gal. (23.0 lits.)	6.0 US.gal. (23.0 lits.)
Carburetor	Diaphragm type MIKUNI BN38-34SH x 2	Diaphragm type KEIHIN CDX42-38 x 2
Ignition and Electrical Systems:		
Ignition system	Flywheel magneto (CDI)	Flywheel magneto (CDI)
Headlight	12V. 60/60W. (High/Low beams)	12V. 60/60W. (High/Low beams)
Taillight	12V. 8W.	12V. 8W.
Stoplight	12V. 23W.	12V. 23W.
Meter lamp	12V. 3W.	12V. 3W.
Frame:	Fabricated aluminum and steel	Fabricated aluminum and steel
Drive track:	Molded rubber, steel reinforced with cleats	Molded rubber, steel reinforced with cleats
Transmission:	V-belt automatic transmission	V-belt automatic transmission
Brake:	Disc brake	Disc brake

1-2. Service Data

Model	GPX338F	GPX433F
Engine:		
Cylinder head tightening torque	Nuts: 16.6 — 19.5 ft-lbs. (2.3 — 2.7 m-kgs.) Bolts: 14.5 — 16.6 ft-lbs. (2.0 — 2.3 m-kgs.)	Nuts: 16.6 — 19.5 ft-lbs. (2.3 — 2.7 m-kgs.) Bolts: 14.5 — 16.6 ft-lbs. (2.0 — 2.3 m-kgs.)
Piston clearance	0.0018 — 0.0020 in. (0.045 — 0.050 mm.)	0.0018 — 0.0020 in. (0.045 — 0.050 mm.)
Lubrication oil	Yamalube or Johnson outboard oil	Yamalube or Johnson outboard oil
Ignition timing	B.T.D.C. 1.6±0.1 mm.	B.T.D.C. 1.6±0.1 mm.

Model	GPX338F	GPX433F
Compression ratio	7.8 : 1	7.0 : 1
Idling speed	2,100 r.p.m.	2,500 r.p.m.
Spark plug	N.G.K. B-9EV	Champion N-2G
Carburetor:		
Model	MIKUNI BN38-34SH x 2 (87800)	KEIHIN CDX42-38 x 2 (87900)
Number of turns out		
Main adjuster	L, R: 1±1/8	L, R: 1±1/8
Slow adjuster	L, R: 3/4	L, R: 1-3/8
P.J.	#85 (Spare #95)	#65
S.J.		#45
Fuel level		
Valve seat	0.059 in. dia. (15 mm.$^{\phi}$)	0.059 in. dia. (1.5 mm.$^{\phi}$)
Ski width	29.5 ins. (750 mm.)	29.5 ins. (750 mm.)
Drive track deflection	0.69 — 0.71 in. (17.5±5 mm.)	0.69 — 0.71 in. (17.5±5 mm.)
Oil pump		
Minimum stroke	0.20 — 0.25 mm.	0.20 — 0.25 mm.
Maximum stroke	1.60 — 1.78 mm.	1.60 — 1.78 mm.

Note:

#95 pilot jet should be used when the engine speed acceleration is not smooth at temperatures below 0°C at low altitudes.

1-3. Tools

To service the snowmobile, the following tools are required.

- □ Special tools
- □ Gauges (Measuring instruments)
- □ General tools
- □ Standard tools

1. Special Tools

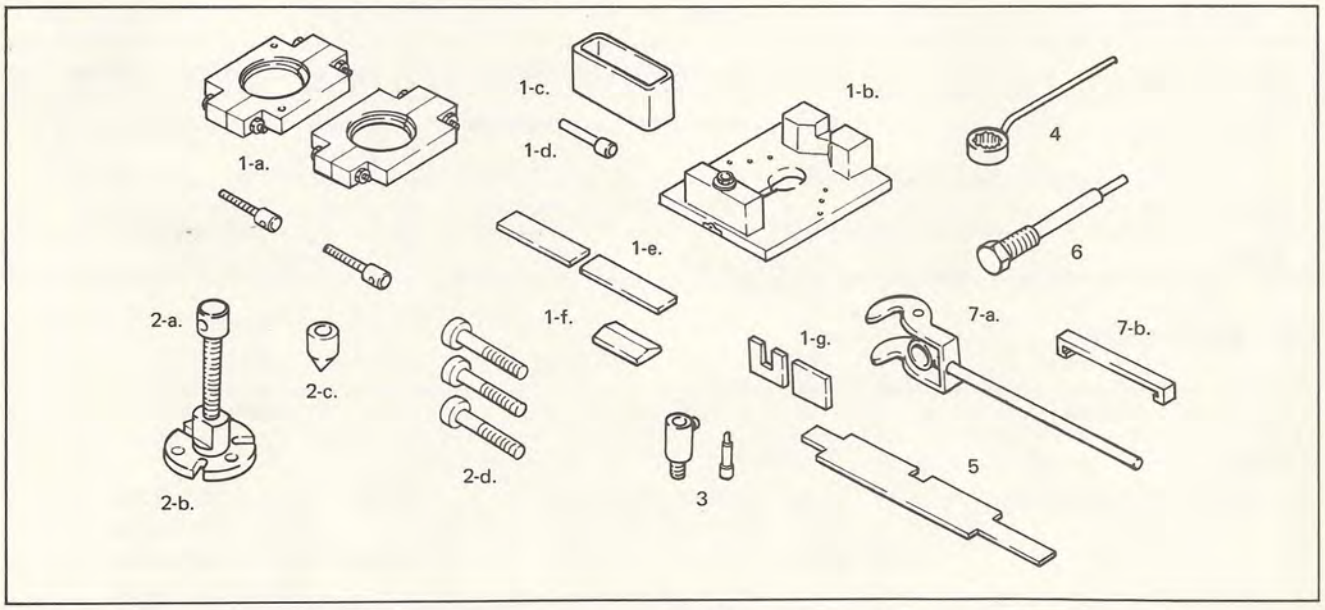

1-a. Crankshaft separator
1-b. Crankshaft jig
1-c. Press box
1-d. Press pin
1-f. Wedge
1-g. Stop (56 mm.)
2-a. Magnet puller body
2-b. Magnet puller screw
2-c. Magnet puller attachment
2-d. Screw, 8-mm. L : 80 mm.
3. Dial gauge stand #2
4. Socket end wrench
5. Sheave gauge
6. Primary fixed sheave puller bolt
7-a. Primary sheave installer/remover 2
7-b. Primary sheave installer/remover 1

Fig. 1-1

2. Gauges

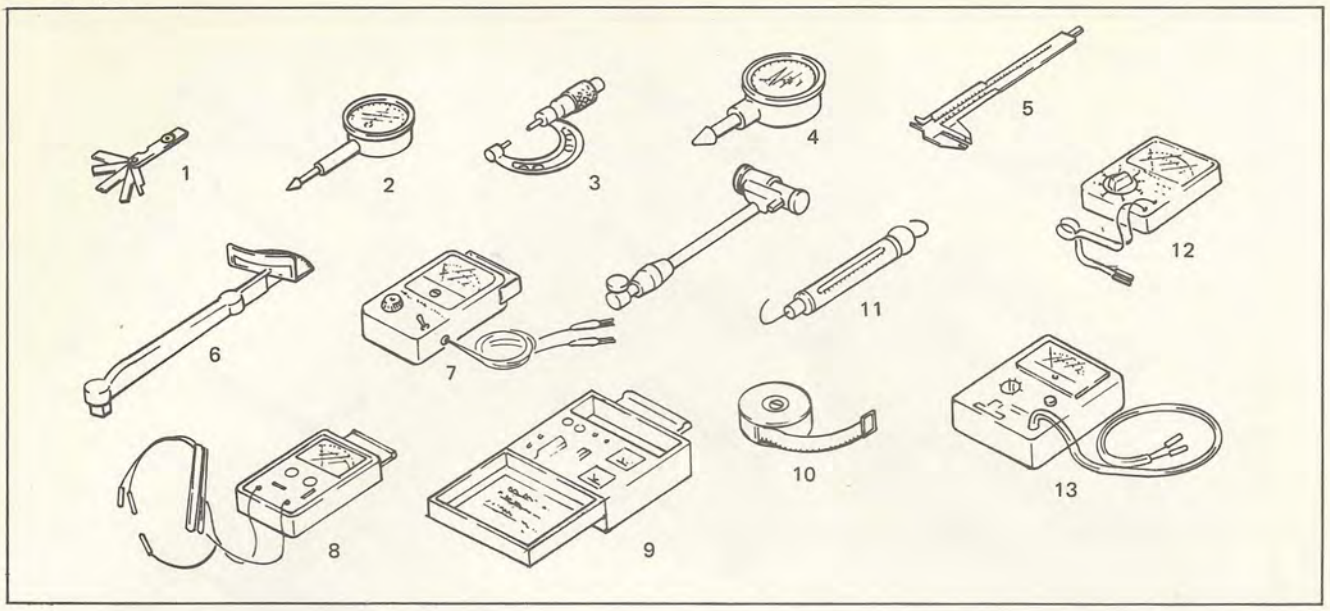

1. Feeler gauge
2. Dial gauge
3. Micrometer
4. Cylinder gauge
5. Vernier calipers
6. Torque wrench
7. Point checker
8. Coil tester
9. Electro tester
10. Scale
11. Spring balance
12. Pocket tester
13. Tachometer

Fig. 1-2

3. General Tools

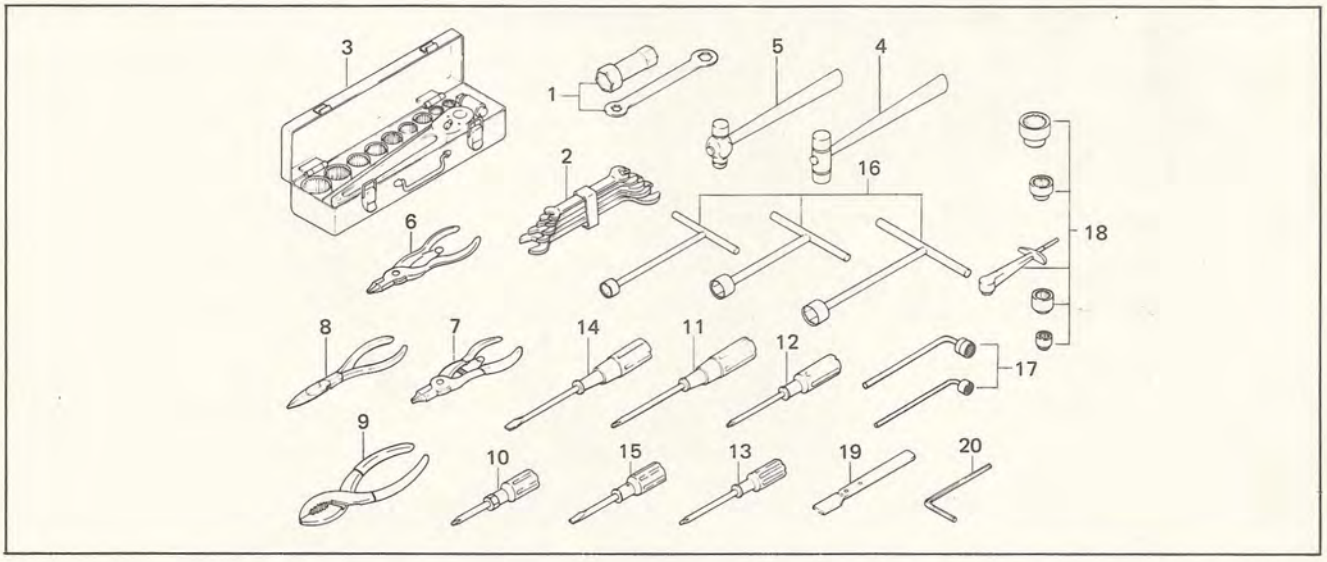

1. Plug wrench
2. Set of open-end wrenches
3. Set of socket wrenches
4. Soft-faced hammer
5. Steel hammer
6. Circlip pliers (ST type)
7. Circlip pliers (RT type)
8. Needle-nose pliers
9. Pliers
10. Phillips-head screwdriver (small)
11. Phillips-head screwdriver (large)
12. Phillips-head screwdriver (medium)
13. Slotted-head screwdriver (medium)
14. Slotted-head screwdriver (large)
15. Slotted-head screwdriver (small)
16. T-handle, socket wrench
17. L-handle socket wrench
18. Torque wrench and sockets
19. Scraper
20. Allen wrench (6 mm.)

Fig. 1-3

4. Standard Tools

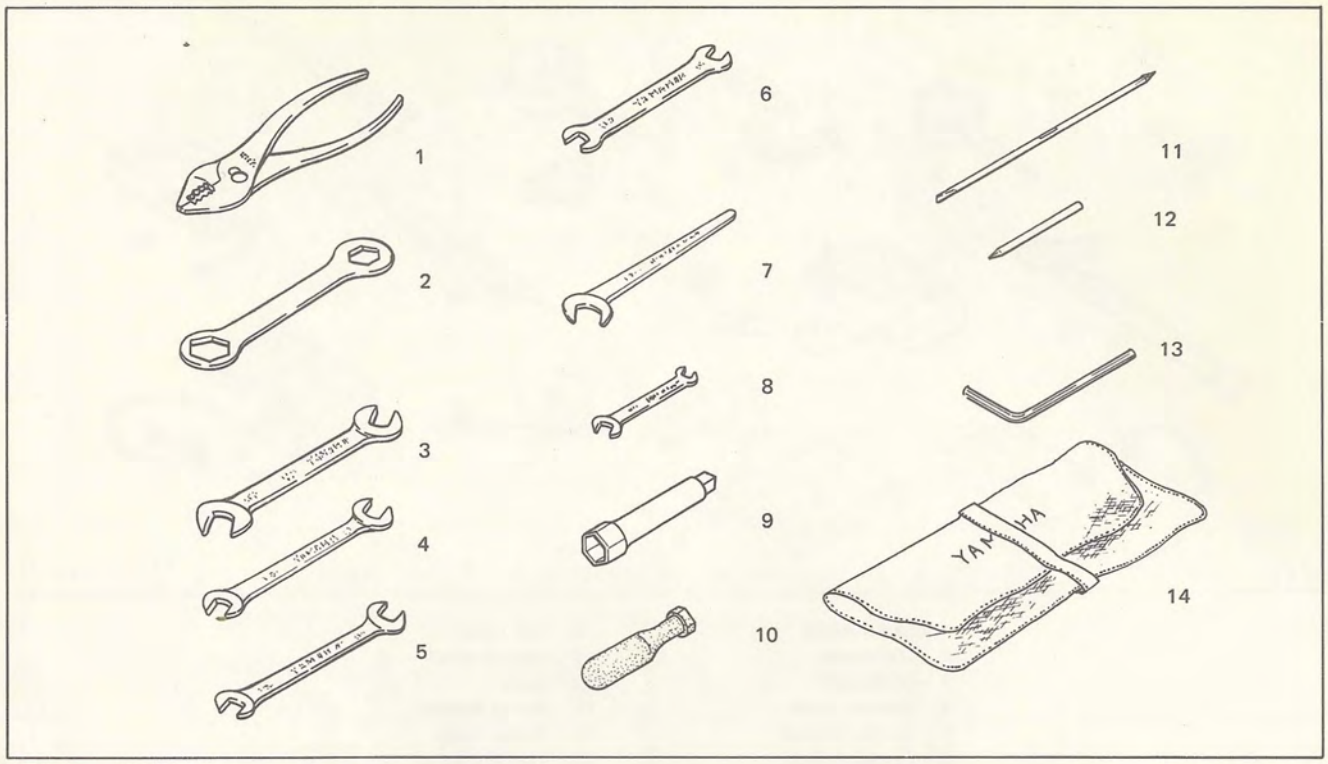

1. Plier
2. 30 x 22 mm. special wrench
3. 17 x 14 mm. open-end wrench
4. 17 x 13 mm. open-end wrench
5. 12 x 10 mm. open-end wrench
6. 10 x 8 mm. open-end wrench
7. 13 mm. special wrench
8. Point wrench and feeler gauge
9. 13 x 21 mm. plug wrench
10. Screwdriver handle
11. Combination slotted and Phillips-head screwdriver
12. Phillips-head screw driver
13. Allen wrench
14. Tool bag

Fig. 1-4

CHAPTER 2. ENGINE

2-1. Removing the Engine

This chapter deals with the procedure for engine removal from the frame.
The engine can be removed without removing the carburetor, and starter assembly.
The carburetor and starter can be removed from the frame without removing the engine.
Tools Required:

- Pliers
- Slotted head screwdriver (M)
- 10 mm. socket-end wrench
- Chisel
- Steel head hammer
- Long nose pliers
- 17 mm. socket-end wrench

1. Remove the four spring hooks and four tension springs from the exhaust chamber, using pliers, and then remove the two exhaust chambers.
   Next, remove the starter handle from the starter handle holder.
2. Remove the throttle wires (R & L) and choke wires from the carburetor assembly.
3. Remove the two spring assemblies from the silencer, and remove silencer 1. (Fig. 2-1)

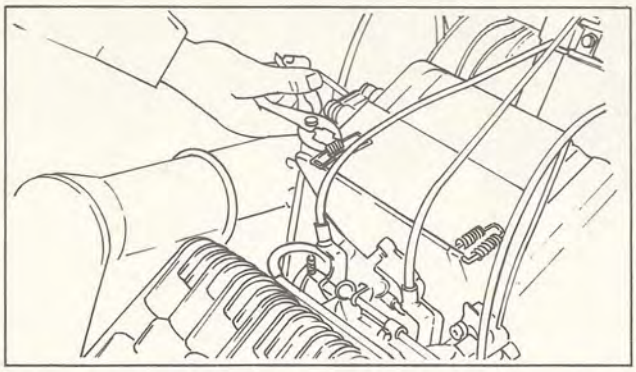

Fig. 2-1

4. Remove the six bolts from the carburetor using the 10-mm. open-end wrench, and remove the silencer-plate. Next, remove the tachometer cable from the oil pump. (Fig. 2-2, 2-3)

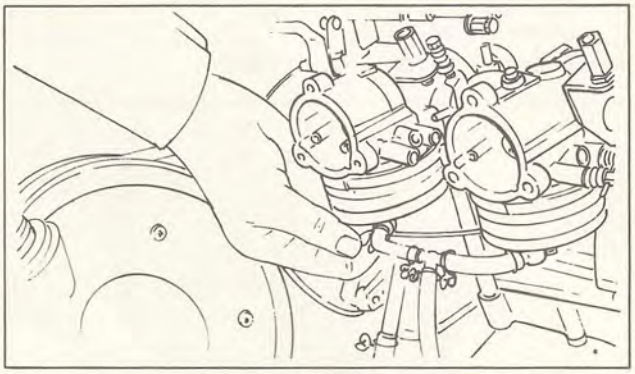

Fig. 2 2

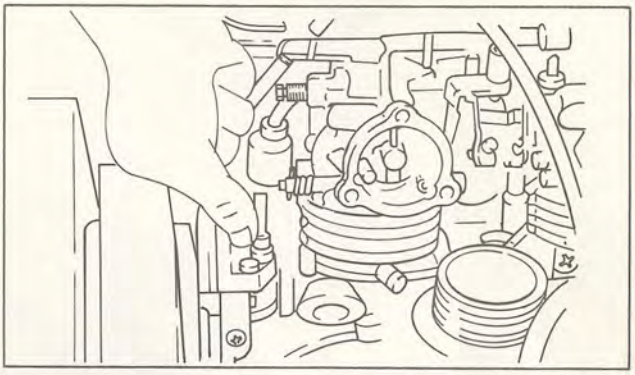

Fig. 2-3

5. Disconnect the lead wire coming from the CDI magneto. Remove the four nuts securing the engine, and demount the engine.

Note:

Before demounting or mounting the engine, the primary sheave must be removed or installed. For procedure, refer to 20-3. Primary Sheave. For carburetor removal, refer to 2-5.

2-2. Starter

Tools required:

10-mm. socket wrench
13-mm. socket wrench
Slotted-head screwdriver (medium)

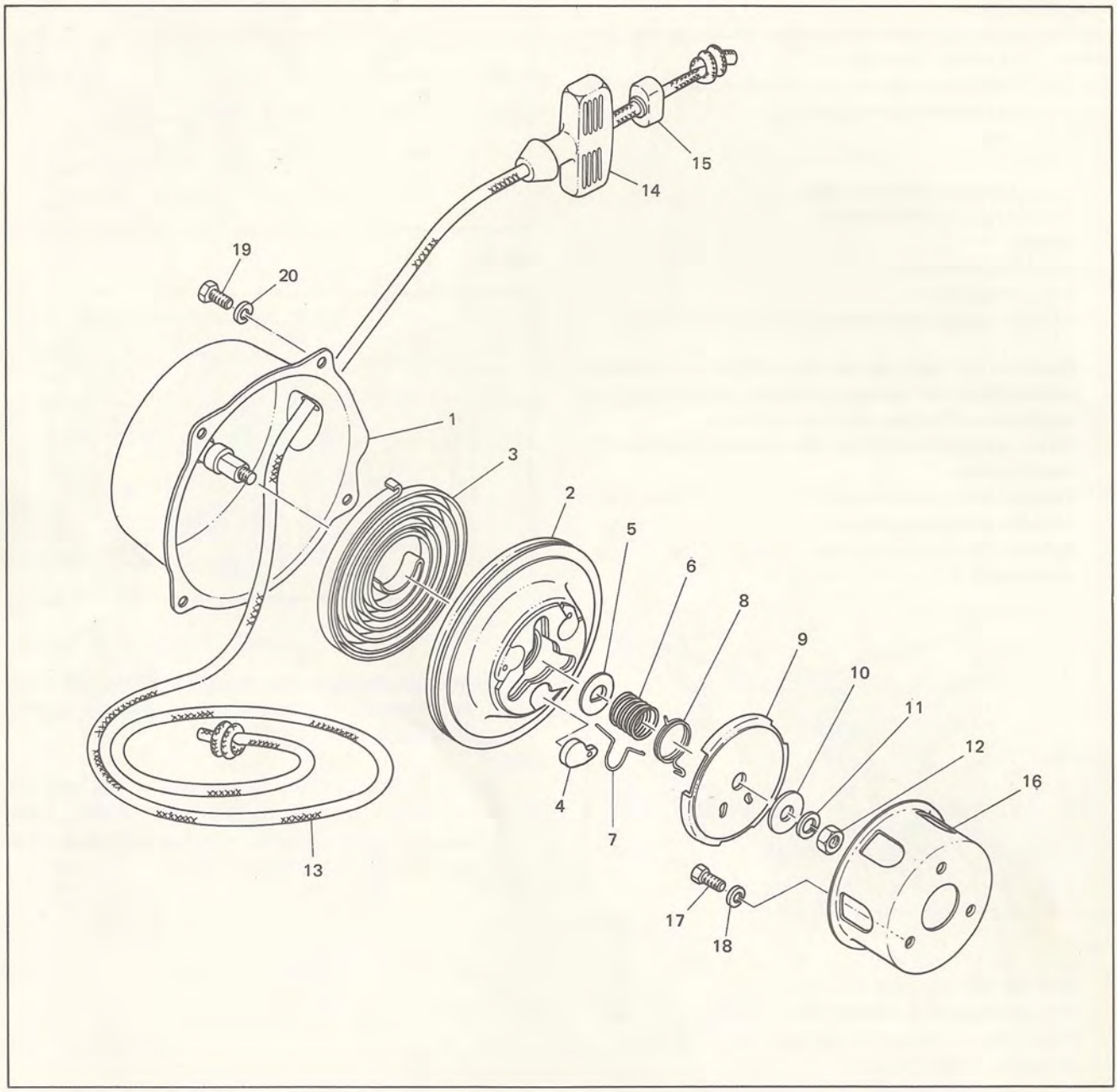

1. Starter case
2. Sheave drum
3. Starter spring
4. Drive pawl
5. Thrust washer
6. Drive plate spring
7. Return spring
8. Return spring
9. Drive plate
10. Thrust washer
11. Spring washer
12. Nut
13. Rope (ℓ= 1820)
14. Handle
15. Connector
16. Starter pulley
17. Bolt
18. Spring washer
19. Bolt
20. Spring washer

Fig. 2-4

For disassembly, assembly, inspection, cleaning and adjustment, refer to the GPX338F/GPX433F Service Manual.

2-2-1. Removal

Remove the four bolts holding the starter and remove it from the crankcase cover. (Fig. 2-5)

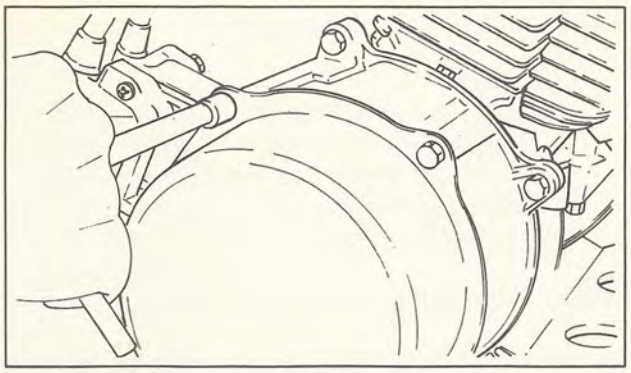

Fig. 2-5

2-3. Primary Sheave

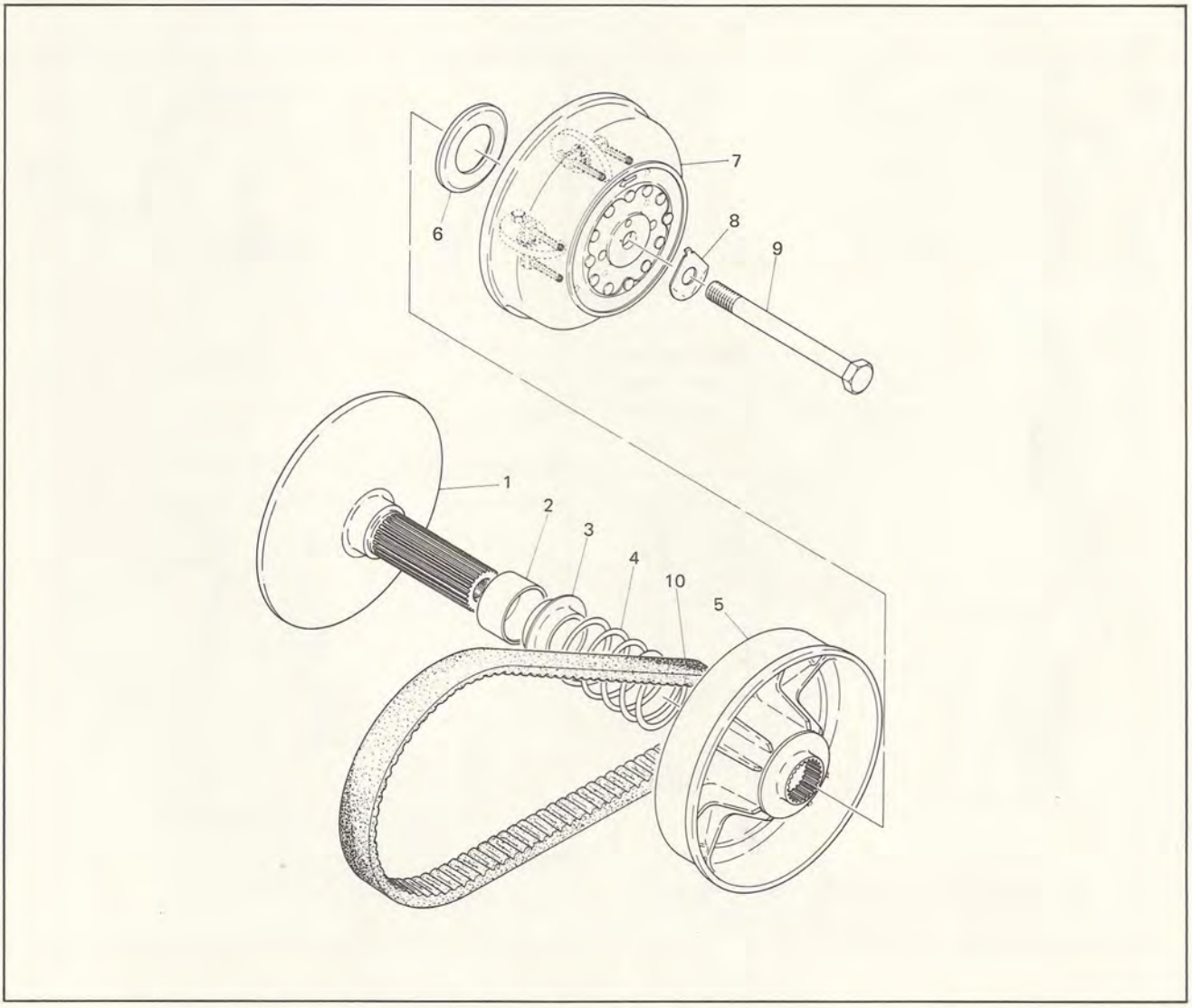

1. Primary fixed sheave complete
2. Bushing
3. Spring seat
4. Compression spring
5. Primary sliding sheave complete
6. Cam
7. Primary sheave cap complete
8. Lock washer
9. Bolt
10. V-Belt

Fig. 2-6

Tools required:

- Chisel
- Steel hammer
- Primary fixed sheave puller bolt (Special tool)
- Primary sheave installer/remover 1 (Special tool)
- Primary sheave installer/remover 2 (Special tool)
- 22 mm. socket wrench
- 17 mm. socket wrench

2-3-1. Disassembly

(1) Straighten the primary sheave assembly mounting bolt lock washer, using the chisel and steel hammer. (Fig. 2-7)

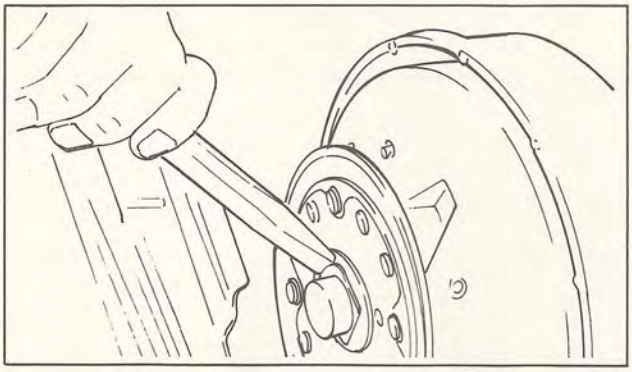

Fig. 2-7

(2) Install primary sheave holder 1 (special tool) on the edges of primary sliding sheave and primary fixed sheave so that the primary sliding sheave is not forced by the spring. (Fig. 2-8)

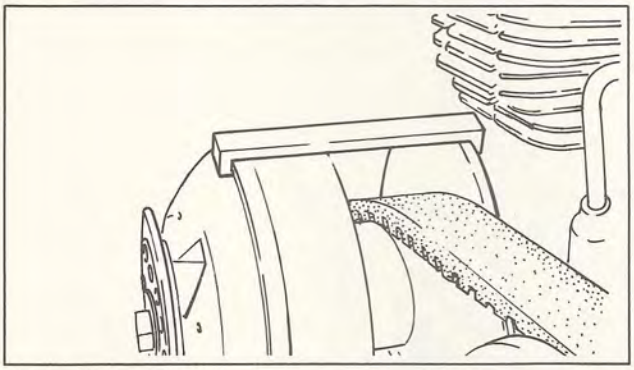

Fig. 2-8

(3) Using the 22-mm. socket wrench, remove the primary sheave assembly securing bolt and remove the primary sheave cap. (Fig. 2-9)

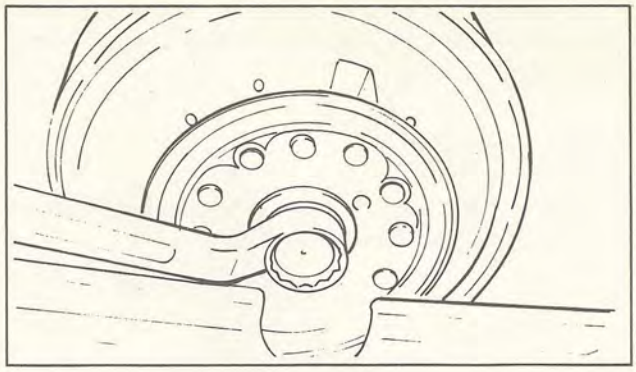

Fig. 2-9

(4) With primary sheave installer/remover 1 being installed, remove the primary sliding sheave and primary fixed sheave from the crankshaft. (Fig. 2-10)

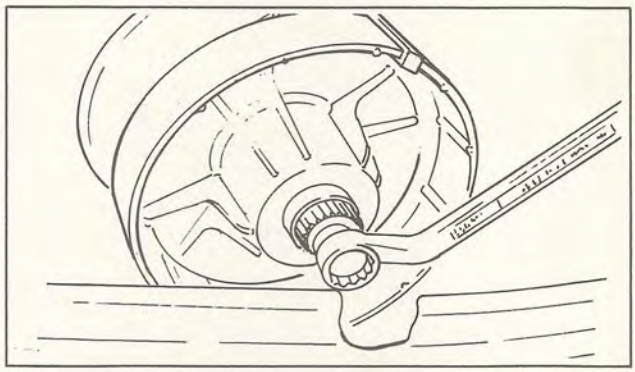

Fig. 2-10

(5) Remove the drive belt. (Fig. 2-11)

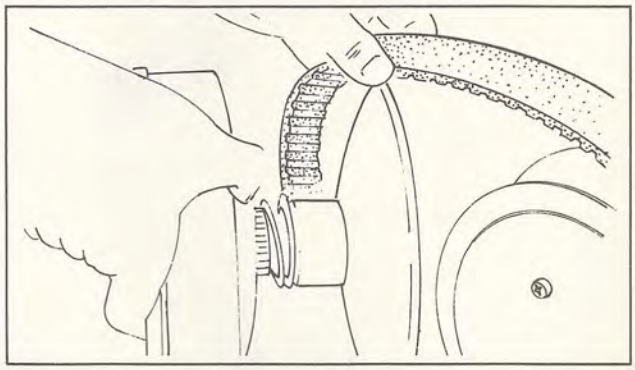

Fig. 2-11

2-3-2. Cleaning and Inspection

(1) Cleaning
Thoroughly clean all parts in a detergent oil, and dry them with compressed air.

(2) Inspection
1) Check the primary shaft splines for wear. If worn excessively, replace.
2) Check the tapered ends of the crankshaft and primary fixed sheave for scratches. If scratched unduly, replace.
3) Check the primary spring for fatigue.
If excessively fatigued, replace.
4) Check the primary sheave cap weights for smooth movement.
Grease the contact area of the weights with other parts.
Also grease the weight pivot points.
5) If the sliding sheave spline is excessively worn, replace.
6) Check the sheave for bends. If bent, replace.
7) If the V-belt width is worn to 26 mm. or less, or if cracked, it should be replaced.
It is advisable to replace the V-belt if the machine is used for a race.

2-3-3. Assembly

(1) Place the V-belt around the secondary sheave.
(2) Install the primary fixed sheave, bushing, spring seat, compression spring, primary sliding sheave as an assembly on the crankshaft.
Place the V-belt between the primary fixed sheave and primary sliding sheave. (Fig. 2-12)

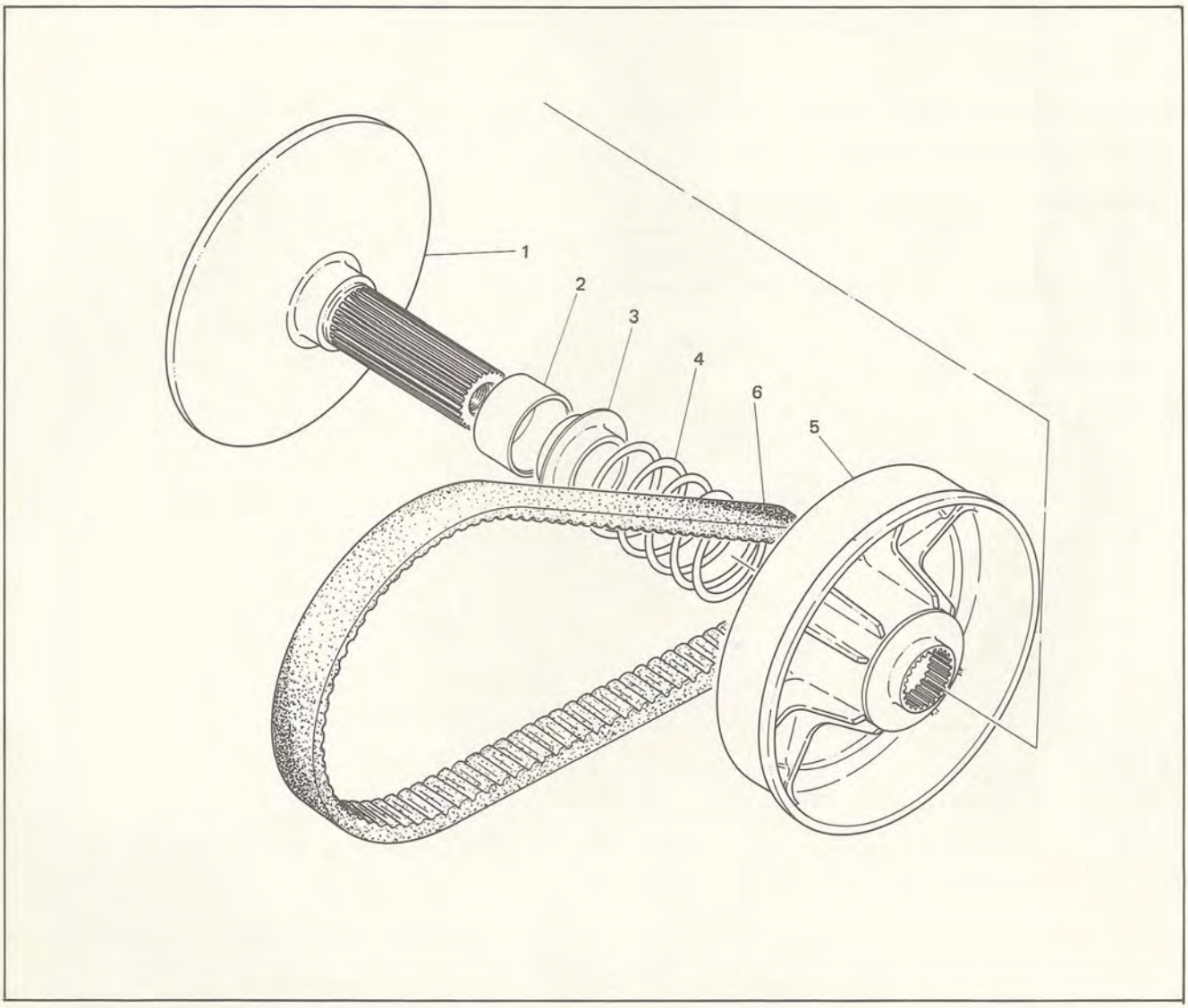

1. Primary fixed sheave complete
2. Bushing
3. Spring seat
4. Compression spring
5. Primary sliding sheave complete
6. V-belt

Fig. 2 12

Note:

Apply Shell Alvania grease #2 or #3 to the primary fixed sheave.

Clean the tapered portions of the crankshaft and primary fixed sheave.

(3) Push in the primary sliding sheave using primary sheave installer/remover 2 (special tool) and primary sheave assembly securing bolt, and install primary sheave installer/remover 1 on the primary fixed sheave and primary sliding sheave. (Fig. 2-13)

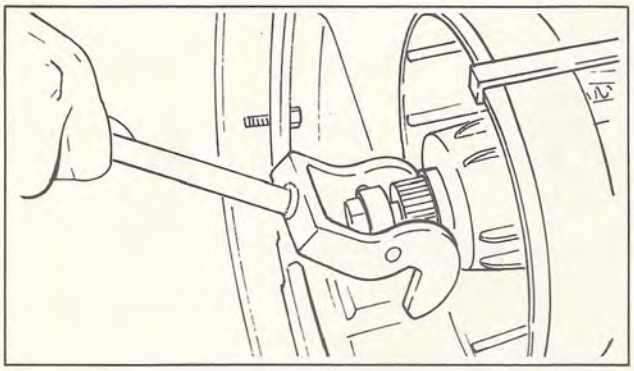

Fig. 2 13

(4) With primary sheave installer/remover 1 being installed, remove primary sheave 2 and primary sheave assembly securing bolt. Then tighten the primary sheave cap with the primary sheave assembly securing bolt.

Next, remove primary sheave installer/remover 1, and bend the lock washer. (Fig. 2-14)

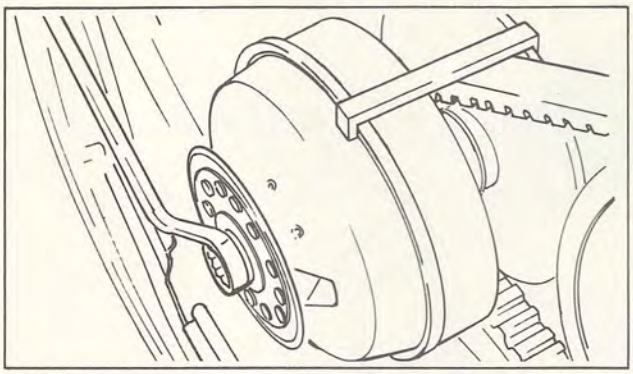

Fig. 2-14

Tightening torque:

Note:

When installing the primary sheave cap, keep the weights in the position as illustrated. (Fig. 2-15)

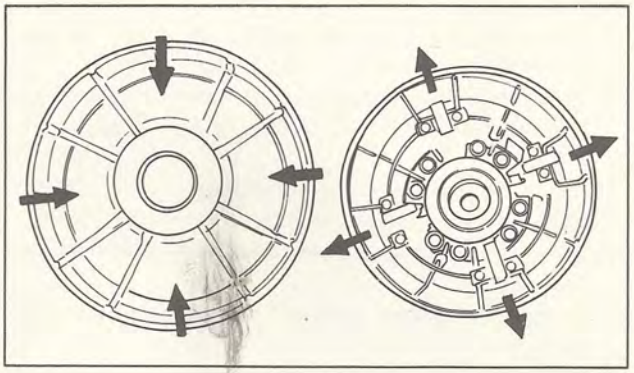

Fig. 2-15

2-4. C.D.I. Magneto

Tools required:

- 10 mm. T-handle wrench
- 26 mm. socket wrench
- Iron bar (12 mm., length 25 mm.)
- 13 mm. T-handle wrench
- 19 mm. open-end wrench
- Flywheel magnet puller (Special tool)
- Impact screwdriver (Phillips large)
- Steel head hammer

(Fig. 2-16)

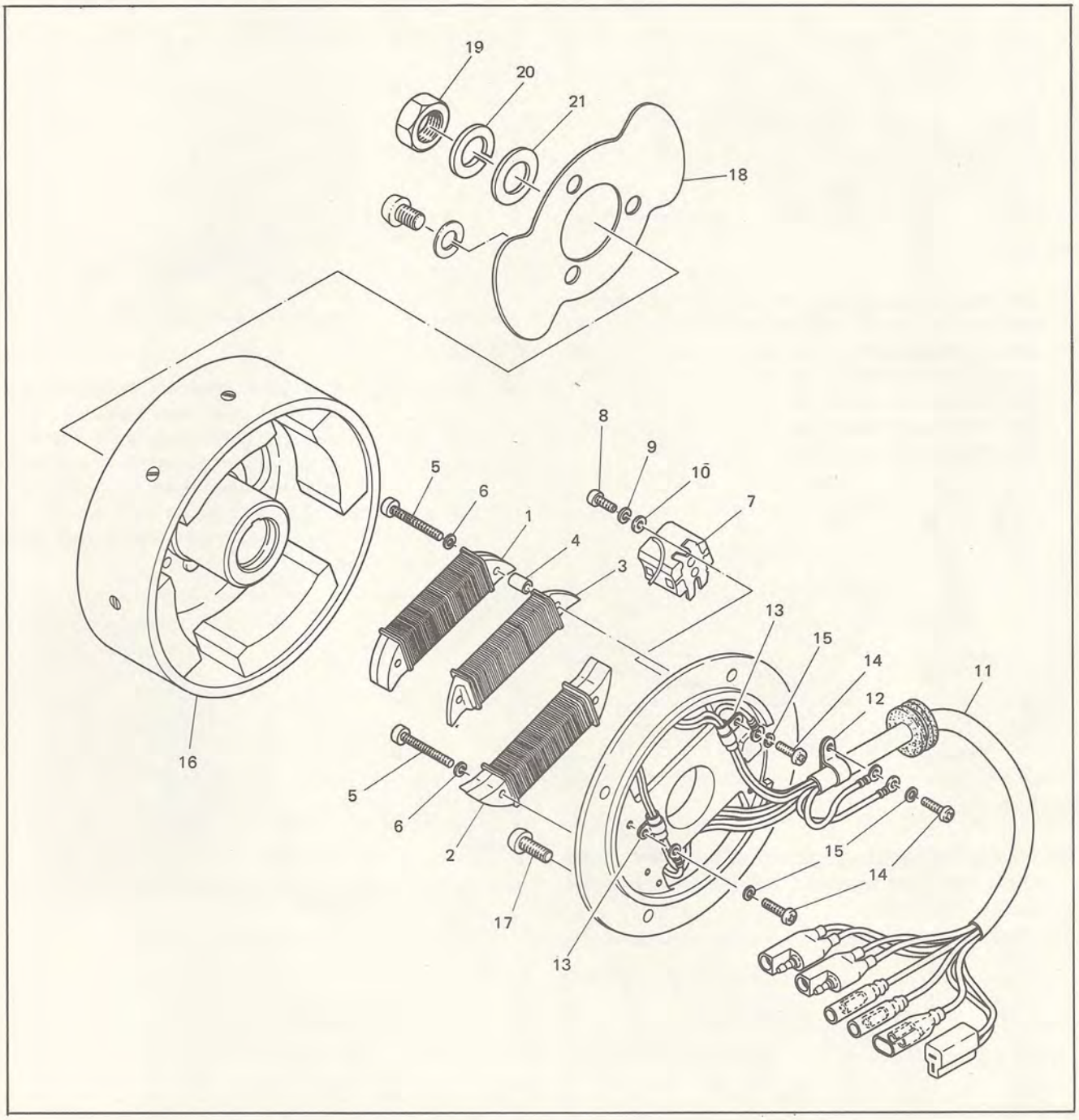

1. Charging coil
2. Lighting coil 1
3. Lighting coil 2
4. Spacer
5. Pan head screw
6. Spring washer
7. Pulser
8. Panhead screw
9. Spring washer
10. Plain washer
11. Lead wire assembly
12. Lead clamp
13. Lead clamp
14. Panhead screw
15. Spring washer
16. Rotor assembly
17. Pan head screw
18. Hole cover
19. Crank shaft nut
20. Spring washer
21. Washer

Fig. 2-16

2-4-1. Removal

(1) Loosen the four bolts and remove the crankcase cover. (Fig. 2-17)

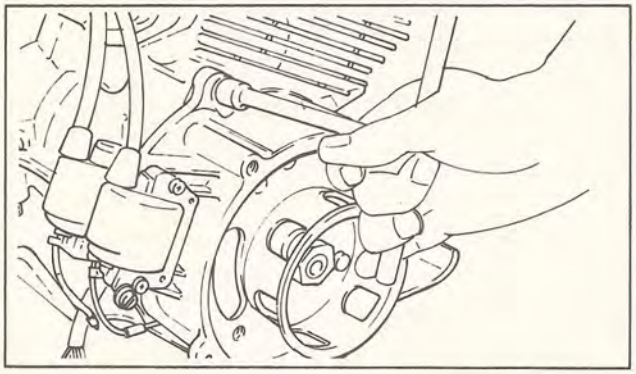

Fig. 2-17

(2) With the starter assembly removed you will now be able to remove the magneto assembly. The first step in this procedure is to remove the flywheel securing nut with a socket wrench 1.02 ins. (26 mm.). (In this case, to loosen or tighten the flywheel, a "bar" should be inserted into the hole in the pulley. The flywheel can be locked.) (Fig. 2-18)

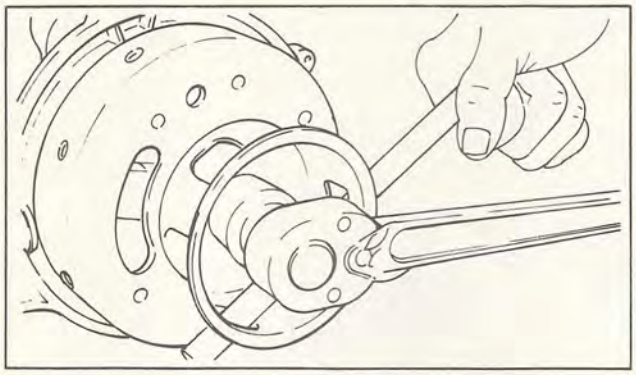

Fig. 2-18

(3) Remove the bolts that hold the starter pulley. Once these bolts are removed, the pulley can be set aside. (Fig. 2-19)

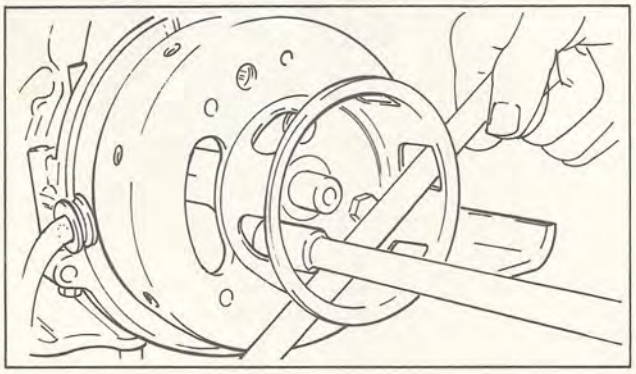

Fig. 2-19

(4) The flywheel magneto can now be removed. This requires the use of special puller that you will find in our special tool kit. Be sure to use the three short screws that come with the puller when removing the flywheel.
(Note: Immediately after the flywheel is removed, take the woodruff key off the shaft and attach it to the flywheel so that it is not lost.) (Fig. 2-20)

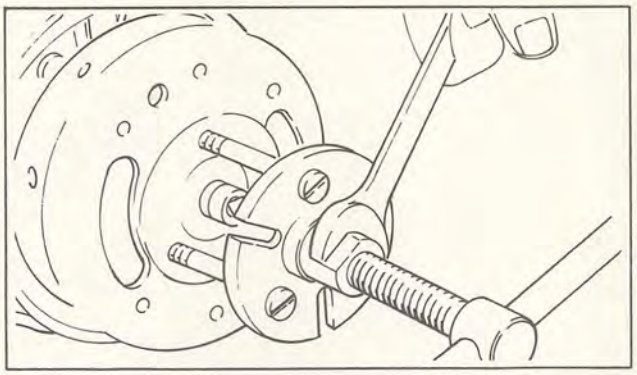

Fig. 2-20

(5) All parts of the magneto assembly, except for the magneto backing plate, have been removed. The only time that the magneto backing plate needs to be removed is in the case of complete engine teardown. The backing plate has to be removed in order to split the cases and this is accomplished by removing the three of four hold-down screws, with an impact screwdriver. (Fig. 2-26)

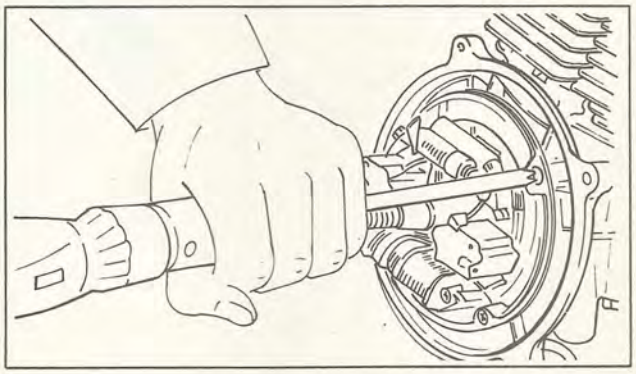

Fig. 2-21

(6) Loosen the three ground wire holding screws on the reverse side of the coil plate, and loosen the four pulser holding screws (two each per pulser) and four pulser coil holding screws (two each per pulser coil). Then remove the pulser coils from the coil plate.

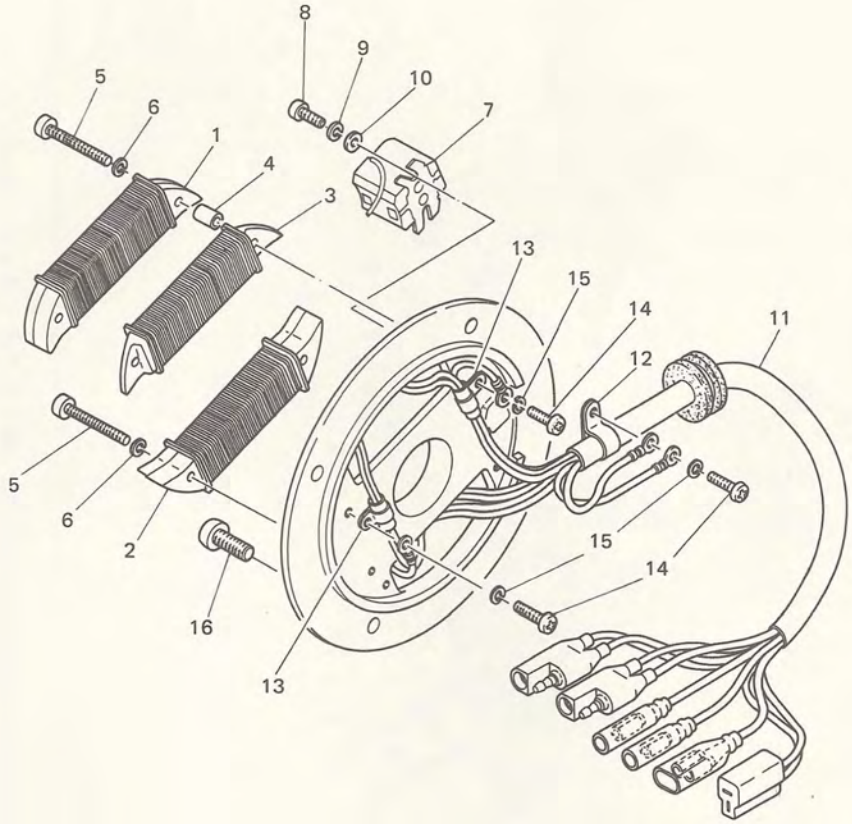

1. Charging coil
2. Lighting coil 1
3. Lighting coil 2
4. Spacer
5. Pan head screw
6. Spring washer
7. Pulser
8. Pan head screw
9. Spring washer
10. Plain washer
11. Lead wire assembly
12. Lead clamp
13. Lead clamp
14. Pan head screw
15. Spring washer
16. Pan head screw

Fig. 2-22

2-5. Carburetor

As long as the engine runs smoothly, the carburetor should not be disassembled unnecessarily. But it should be cleaned once during the season or periodically according to operating conditions.

Service Tools:

Phillips-head screwdriver (medium)
Long nose pliers
13-mm. open-end wrench
10-mm. open-end wrench
6-mm. open-end wrench (socket wrench)
Air compressor
Slotted-head screwdriver (medium)
Pliers
Steel head hammer

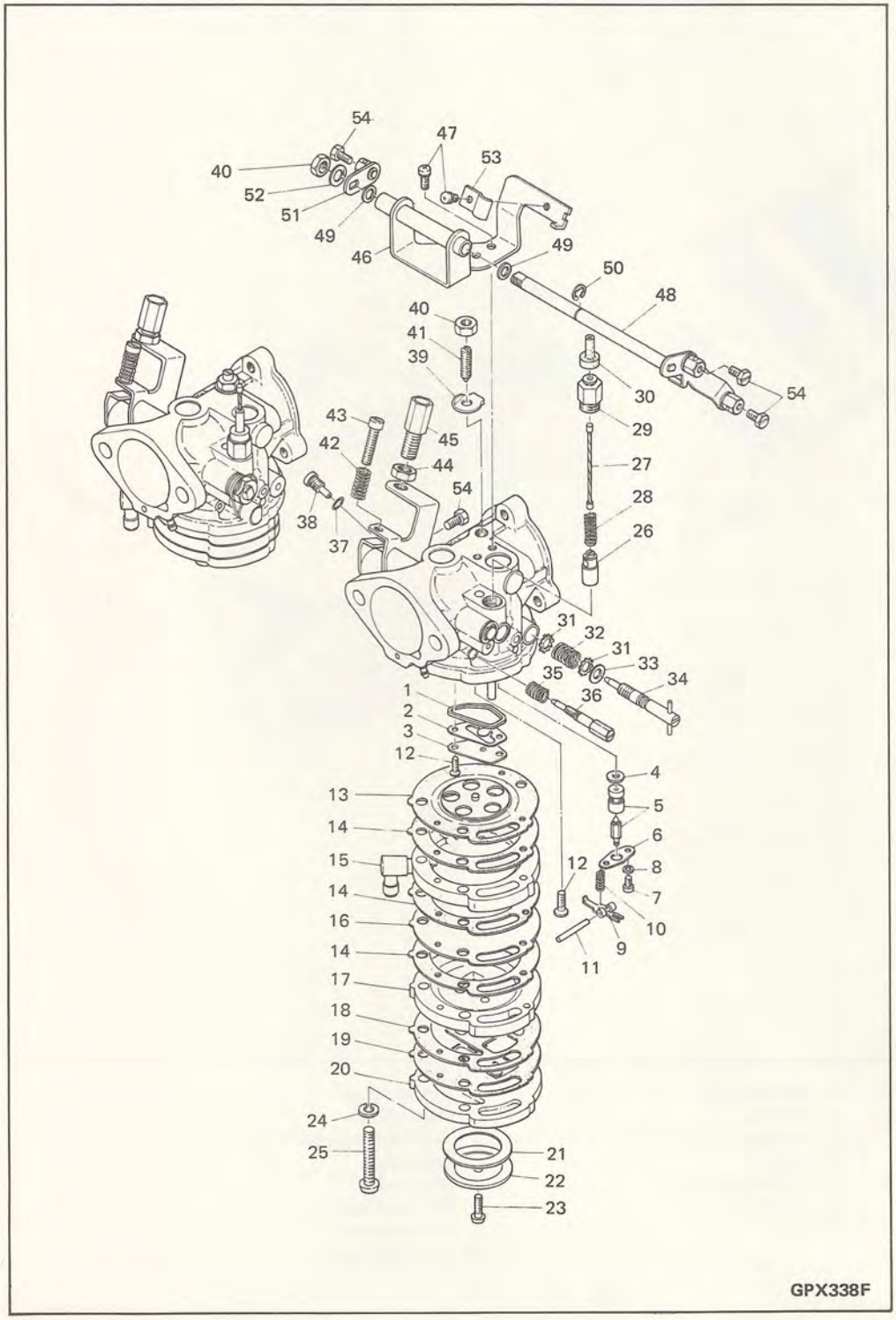

1. Gasket
2. Check seat valve
3. Set check plate
4. Valve seat washer
5. Valve seat ass'y (#1,5)
6. Plate
7. Spring washer
8. Pan head screw
9. Diaphragm arm
10. Diaphragm spring
11. Lever pin
12. Oval head screw
13. Main diaphragm
14. Body gasket 1
15. Body 1
16. Pump diaphragm
17. Body 2
18. Body gasket 2
19. Check valve
20. Body 3
21. Gasket
22. Cover
23. Screw
24. Spring washer
25. Pan head screw
26. Starter plunger
27. Cable assembly
28. Plunger spring
29. Plunger cap
30. Cap
31. Washer
32. Spring
33. Washer
34. Main adjusting screw
35. Slow adjusting spring
36. Slow adjusting screw
37. O-Ring
38. Pilot jet (#85)
39. Washer
40. Lock nut
41. Screw
42. Spring
43. Throttle screw
44. Nut
45. Throttle adjuster
46. Bracket
47. Screw
48. Shaft complete
49. Washer
50. Clip
51. Lever
52. Washer
53. Plate
54. Rod screw

Fig. 2-23

1. Gasket
2. Pump diaphragm
3. Pump body 1
4. Gasket
5. Check valve
6. Pump body 2
7. Needle valve
8. Valve pin
9. Arm spring
10. Float arm
11. Arm pin
12. Oval head screw
13. Washer
14. Fuel level pipe
15. Screw
16. Blind cap
17. Plug screw
18. Washer
19. Diaphragm
20. Compression spring
21. Spring seat
22. Pump body 3
23. Lock nut
24. Stop screw
25. U-ring
26. Pan head screw
27. Pan head screw
28. Rod
29. Cap
30. Pump body 4
31. Diaphragm
32. Compression spring
33. Fuel cover
34. Pan head screw
35. Spring washer
36. Collar
37. Arm
38. Lever pin
39. Washer
40. Cotter pin
41. Rod
42. Spring
43. Collar
44. Clip
45. O-ring
46. Washer
47. Main adjuster spring

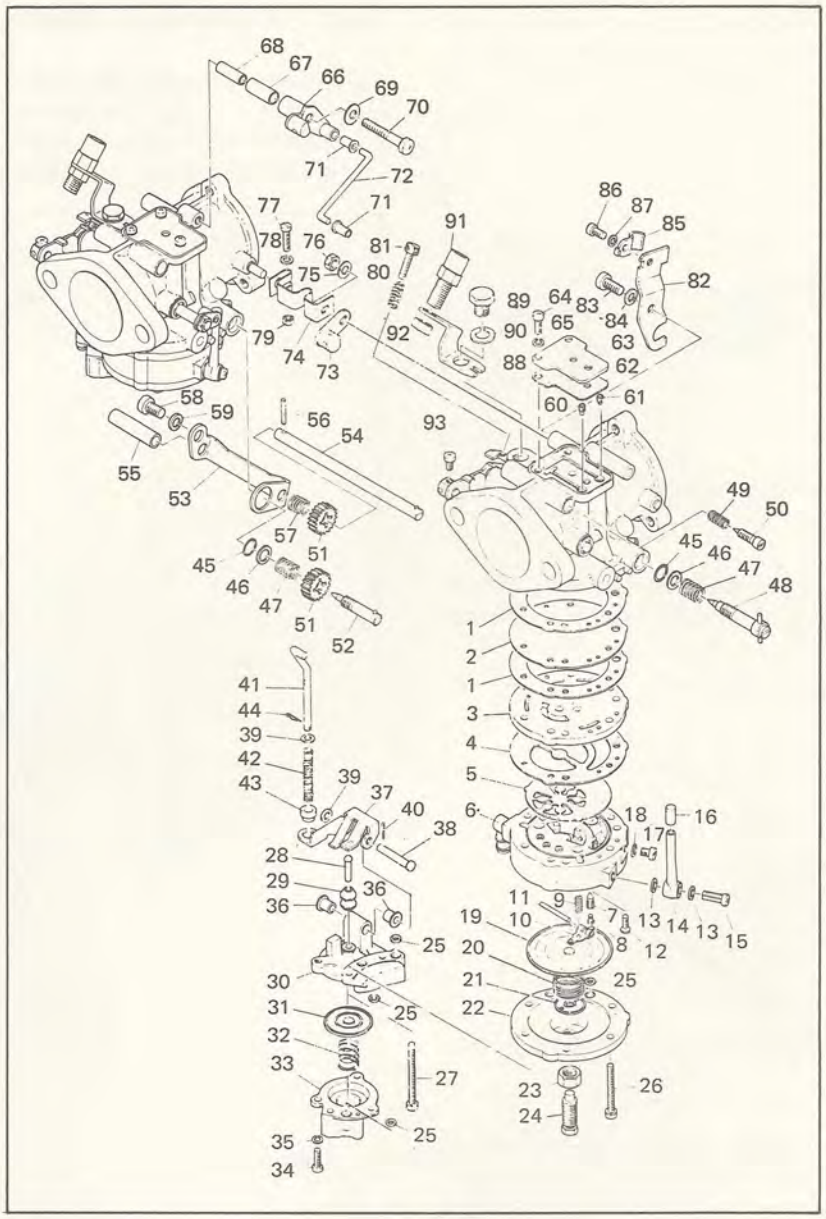

48. Main adjuster screw
49. Spring
50. Adjust screw
51. Gear
52. Main adjuster screw
53. Stay plate
54. Link shaft
55. Collar
56. Spring pin
57. Compression spring
58. Pan head screw
59. Spring washer
60. Slow jet (#52)
61. Partial jet (#68)
62. Gasket
63. Plate
64. Pan head screw
65. Spring washer
66. Link lever
67. Collar
68. Collar
69. Washer
70. Pan head screw
71. Collar
72. Rod
73. Link lever
74. Connector
75. Lock washer
76. Nut
77. Pan head screw
78. Washer
79. Nut
80. Stop screw spring
81. Stop screw
82. Stay plate
83. Pan head screw
84. Spring washer
85. Stay plate
86. Pan head screw
87. Spring washer
88. Stay plate
89. Bolt
90. Spring washer
91. Cable adjuster
92. Nut
93. Pan head screw

Fig. 2-24

2-5-1. Removal

(1) Remove the throttle wire, choke wire, pulse pipe, fuel pipe and oil pump control rod, and remove the four nuts using the 13-mm. open-end wrench. Then remove the carburetor from the cylinder.
Be careful not to lose the spacer between the carburetor flange and the stud bold. (Fig. 2-25)

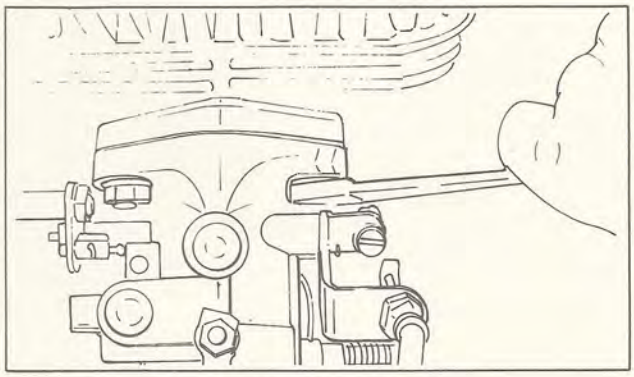

Fig. 2-25

(2) Remove the two springs, and remove silencers 1 and 2 as an assembly from the silencer plate. (Fig. 2-26)

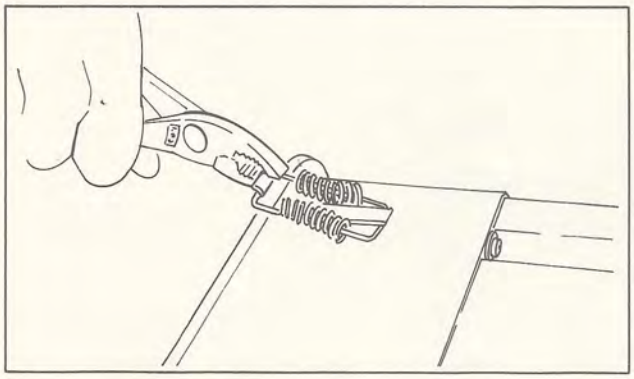

Fig. 2-26

(3) Straighten the lock washers, and remove the six bolts using the 10-mm. T-handle wrench. Remove the silencer plate from the carburetor. (Fig. 2-27)

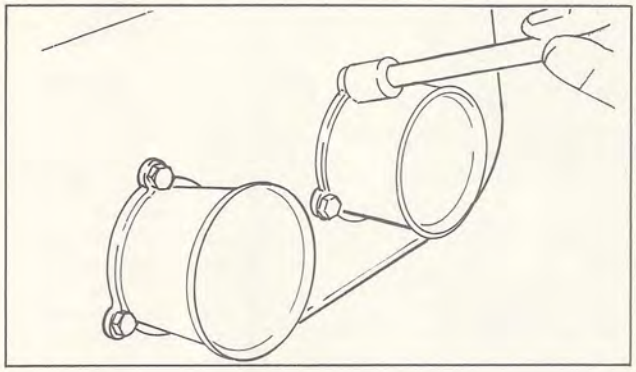

Fig. 2-27

Before disassembling the carburetor, its exterior should be washed with gasoline or petroleum. When using compressed air, take care not to blow into any small holes such as the fuel inlet port and impulse port. Otherwise, the compressed air can break the diaphragm.

2-5-2. Disassembly (GPX338F)

(1) Loosen the screw, and remove the cover and gasket (rubber). Loosen the four screws, and remove body 3, check valve, body 2 gasket, body 2, body 1 gasket, body 1 and main diaphragm. (Fig. 2-28)

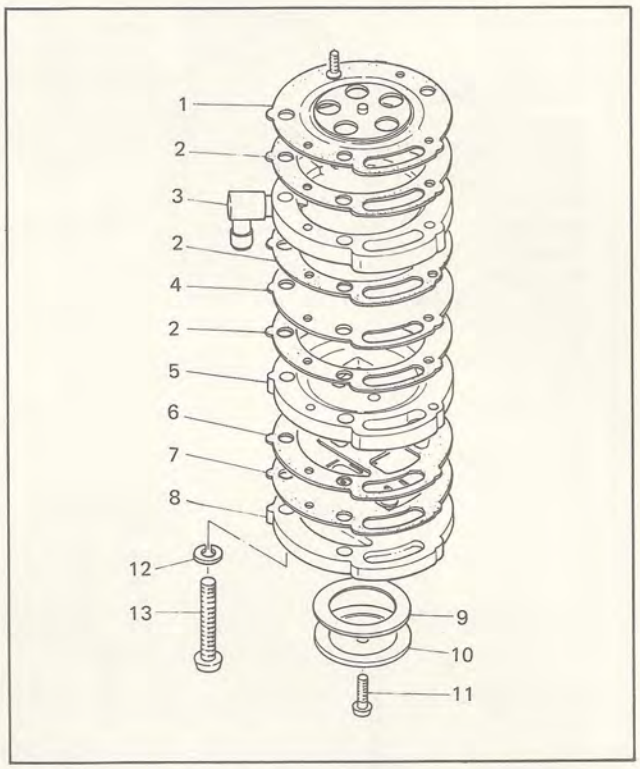

1. Main diaphragm	6. Body gasket 2	10. Cover
2. Body gasket 1	7. Check valve	11. Screw
3. Body 1	8. Body 3	12. Spring washer
4. Pump diaphragm	9. Gasket	13. Pan head screw
5. Body 2		

Fig. 2-28

(2) Loosen the oval head screw, and remove the lever pin, diaphragm arm, diaphragm spring and needle valve.
Remove the two pan head screws, and remove the plate and valve seat (#1.5).
Remove the two oval head screws, and remove the set check plate, check valve seat and gasket.
Since the check valve seat is very thin, be careful not to lose or damage. (Fig. 2-29)

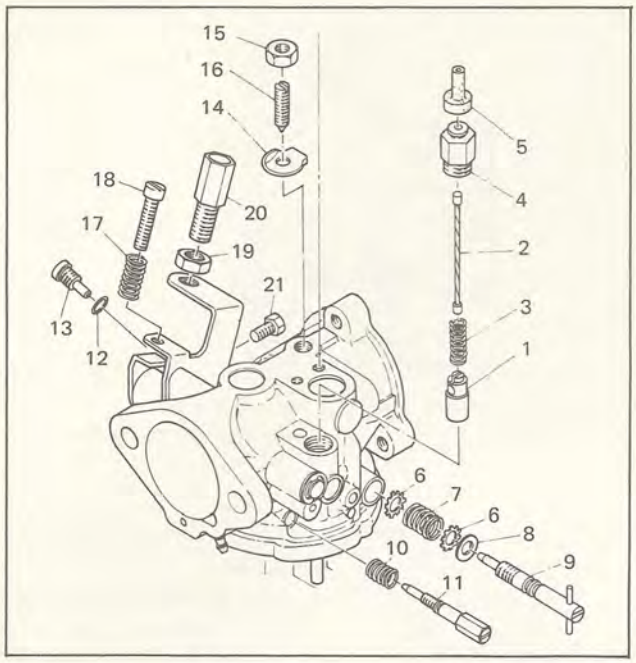

1.	Starter plunger	8.	Washer	15.	Lock nut
2.	Cable assembly	9.	Main adjusting screw	16.	Screw
3.	Plunger spring	10.	Slow adjusting spring	17.	Spring
4.	Plunger cap	11.	Slow adjusting screw	18.	Throttle screw
5.	Cap	12.	O-ring	19.	Nut
6.	Washer	13.	Pilot jet (#85)	20.	Adjuster throttle
7.	Spring	14.	Washer	21.	Rod screw

Fig. 2-29

(3) Remove the slow adjusting screw and slow adjusting screw spring as an assembly, using a slotted-head screwdriver.
Remove the main adjusting screw and spring washer using a slotted-head screwdriver or by hand.
Do not remove the two O-rings from the main adjusting screw groove.
Using a slotted-head screwdriver (small), remove the pilot jet and O-ring.
On the right-hand carburetor, the slow adjusting screw, main adjusting screw and pilot jet are installed on the right side of the carburetor, but on the left-hand carburetor, the pilot jet is positioned on the right side of the carburetor.
Using the 12-mm. open-end wrench, loosen the plunger cap, and remove the cable assembly, plunger spring and starter plunger.
Straighten the lock washer, and loosen the lock nut using the 10-mm. open-end wrench. Then loosen the primary venturi holding screw, and remove the primary venturi and secondary venturi from inside. (Fig. 2-30)

Tightening torque:
Pilot jet 1.45 ft-lbs. (0.2 m-kg.)
Valve seat screw 0.723 ft-lbs. (0.1 m-kg.)
Diaphragm arm screw 0.723 ft-lbs. (0.1 m-kg.)

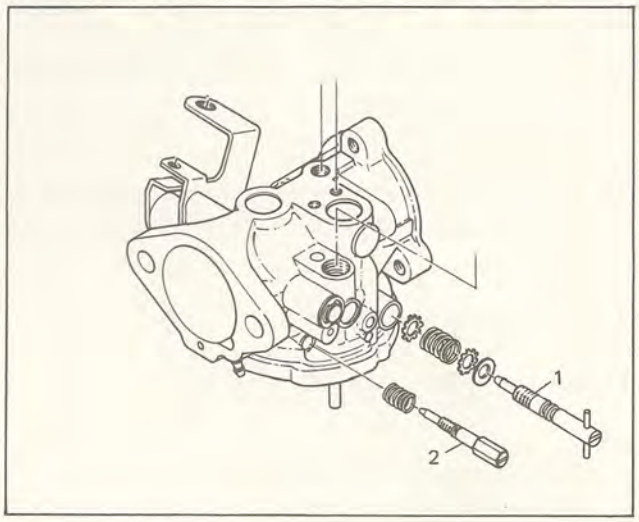

1. Main adjuster screw
2. Pilot screw

Fig. 2-30

(4) Do not remove the throttle shaft and the throttle butterfly.

2-5-3. Cleaning and Inspection (GPX338F)

(1) Cleaning
Clean the carburetor with carburetor cleaner or suitable solvent. Remove all rubber components from the carburetor parts (such as diaphragms and gaskets) to prevent the solvent from attaching the rubber.

(2) Inspection
1) Check the throttle link mechanism, throttle butterfly and other moving parts for damage.
If faulty, replace the carburetor body.
2) Check the carburetor body and pump body, and-if cracked or holed, replace.
3) Check the threaded portion of the stop screw, and if damaged, replace.
4) Check the main diaphragm for center plate position and any other defect. Replace, if any defect is found.
5) Check the chek seat valve for cracks and holes, replace if damaged.
6) Check the lever pin, diaphragm arm, valve seat, and needle valve for wear or breakage. If excessively worn or broken, replace.
7) Check the diaphragm spring for fatigue. If it fatigued excessively replace.
8) Check the pump diaphragm. If bent or holed, replace.
9) Check the diaphragm spring for fatigue. If it is fatigued excessively, replace.

10) Check the metering needles on the ends of main adjusting screw and slow adjusting screw. If any needle is damaged, the needle seat is considered to be scratched. Replace the carburetor body.
11) Check the idle bypass hole for clogging. If clogged, clean with compressed air. Never use a wire.
12) Check the main nozzle for clogging, and if necessary, blow with compressed air.
13) Check the starter shaft.
    If the shaft is bent, replace.
14) If the main adjusting screw O-ring is scratched or broken, replace together with the main adjusting screw.

2-5-4. Assembly (GPX338F)

Reverse the procedure for disassembly

Note:

- Take care so that the main diaphragm is installed in the correct position. Fit the main diaphragm rim to the pump body flange.
- The throttle mechanism should not be disassembled.
- When assembling, be careful not to reverse the position of gaskets. Carburetor failures are often caused by dust and incorect service.
- Be careful not to install the primary venturi in the opposite direction. Be sure to align the nozzle with the hole in the carburetor body.

2-5-5. Installation (GPX338F)

For installation, reverse the procedure for removal.

No tightening torque for carburetor mounting nuts can be specified for reason of its construction, and therefore, they should be carefully tightened with a wrench.

2-5-6. Adjustments (GPX338F)

(1) The carburetor is properly adjusted and subjected to a stringent test at the factory, and therefore, it should not be disassembled or adjusted unnecessarily.
However, according to operating conditions or geographical conditions (weather, altitude, etc.), it may require readjustment, cleaning and inspection. In this case the following parts must be readjusted.
1) The slow adjusting screw to control the mixture when the engine idles.
2) The throttle stop screw to control the idling speed.
3) The main adjusting screw to control the mixture when throttle opening is larger.
4) The pilot jet to control the speed from idling to medium range for smooth acceleration. (In this range, the mixture can not be requlated by the slow adjusting screw and the main adjusting screw.) (Fig. 2-31)

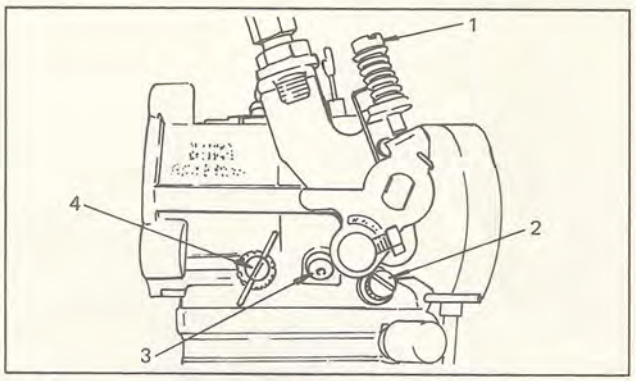

1. Throttle stop screw
2. Slow adjusting screw
3. Pilot screw
4. Main adjusting screw

Fig. 2-31

5) Adjusting the throttle stop screw, slow adjusting screw and main adjusting screw.
The slow adjusting screw, pilot jet and the main adjusting screw are set at the factory so that they match the operation on level land in winter. Therefore, the jet and screws may require readjustments depending on geographical conditions.

(2) Idle-speed adjustments
Idle-speed adjustments must be made with the slow adjusting screw (to regulate the mixture) and the throttle stop screw (to regulate the idling speed) so that the engine idles smoothly.
Whether or not engine idle mixture is correctly adjusted will also affect the starting and acceleration of the engine. The slow adjusting screw should be backed off 1-3/8 turns from a lightly seated position. With the slow adjusting screw in this position, the mixture will be slightly richer. (Fig. 2-32, 2-33)

Throttle stop screw adjustment

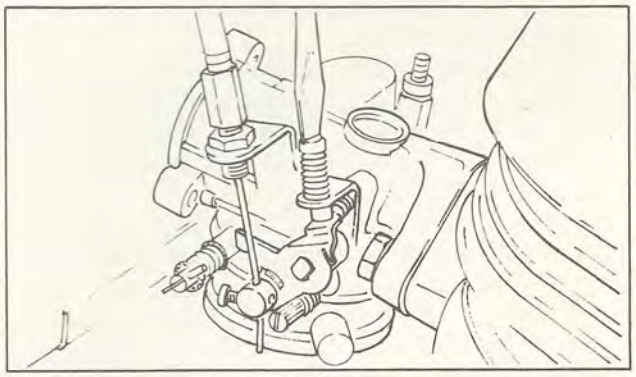

Fig. 2-32

Slow adjuster adjustment

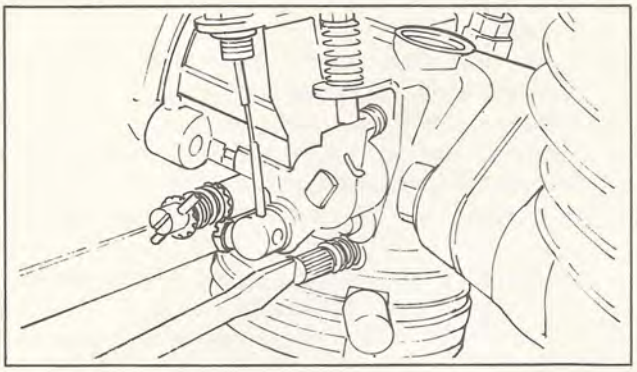

Fig. 2-33

1) Procedure for adjustment

a) Set the slow adjusting screw and the main adjusting screw to specification at the same time.

Settings at factory:

Settings at factory	GPX338F
Slow adjusting screw	(L, R) 3/4
Main adjusting screw	(L, R) 1.0 ± 1/8
Pilot jet	#85

b) Turn the slow adjusting screw in or out 1/8 turn each time, until the engine idles fast.

c) Back out the slow adjusting screw additional 1/8 ± 1/4 turn to provide enough fuel for proper acceleration.

d) Perform a running test, and warm up the engine again.
Then adjust the idle adjusting screw so that the engine runs at the specified idling speed.

(3) Pilot jet adjustment
If the standard pilot jet (#85) can not maintain smooth engine performance at low altitudes below 33.8° F, the spare pilot jet (#95) should be used. (Fig. 2-34)

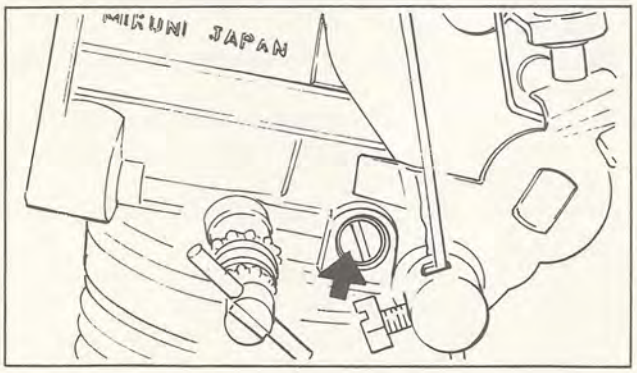

1. Pilot jet

Fig. 2-34

(4) Main adjusting screw adjustment
The main adjusting screw controls the mixture when the snowmobile runs at speeds from medium to high.
It should be adjusted so that the engine runs smoothly with the richest possible mixture.
This is very important in order to prevent the engine from overheating.

1) Procedure for adjustment

a) Back out the main adjusting screw as specified.
Turns out: 1 ± 1/8

b) Perform a running test. To test, accelerate the snowmobile by quickly pulling the throttle lever to full-throttle position from idling position.

c) Perform a high-speed running test, and find the position of the main adjusting screw where the engine performance is the best. The adjustment should be made by turning the adjusting screw 1/8 turn each time.

d) After the high-speed running test, check the spark plug for discoloration. Adjust the main adjusting screw so the spark plug porcelain has a tan color at maximum high speed load.

e) Keep the snowmobile running at high speed, and test the engine operating condition. Repeat the operations a) to c) above, and set the main adjusting screw in the best position to achieve good spark plug color.

Note:
If the main adjusting screw setting by the factory is improper (causing the mixture too rich or too lean), an adjustment should be started with the position where it is back out about 1/4 turn from factory specification. (Fig. 2-35)

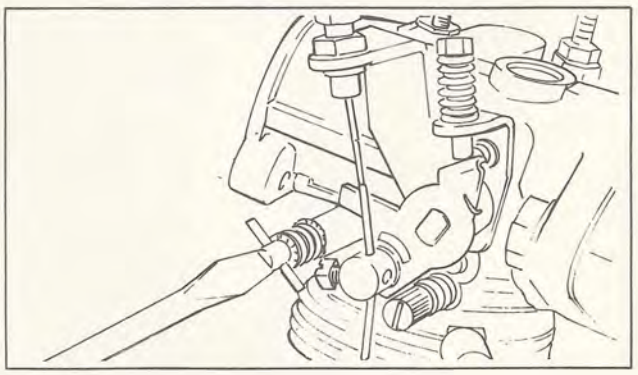

Fig. 2-35

2-5-7. Disassembly (GPX433F)

(1) Remove the three pan head screws, and remove the accelerator pump fuel cover. Handle the compression spring and diaphragm with care. Be careful not to lose the two O-rings.
Remove the clip, and separate the accelerator control rod and the arm. Remove the two pan head screws, and remove pump body 4. Take care not to lose the spring and collar attached to the accelerator pump control rod.
Remove the four pan head screws, and remove pump body 3, spring seat, main diaphragm spring, diaphragm, pump body 2, check valve, gaskets, pump body 1, pump diaphragm, and two gaskets (both upper and lower) of the pump diaphragm.

(2) Remove the Phillips-head screw from pump body 2, and remove the arm pin, float arm, arm spring, valve pin and needle valve.
Remove the screw, and remove the washer and fuel level pipe.
Remove the plug screw, and remove the plain washer.

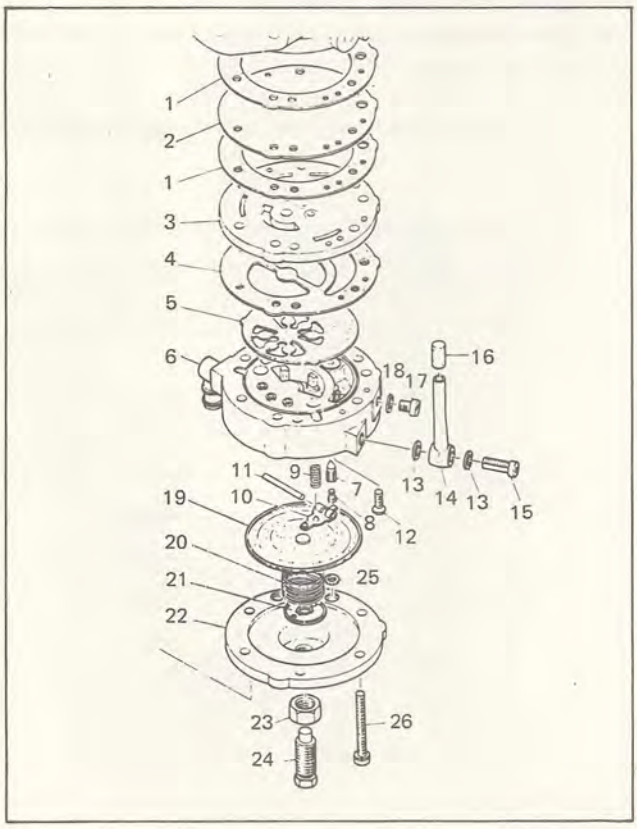

1.	Gasket	10.	Float arm	19.	Diaphragm
2.	Pump diaphragm	11.	Arm pin	20.	Compression spring
3.	Pump body 1	12.	Oval head screw	21.	Spring seat
4.	Gasket	13.	Washer	22.	Pump body 3
5.	Check valve	14.	Fuel level pipe	23.	Lock nut
6.	Pump body 2	15.	Screw	24.	Stop screw
7.	Needle valve	16.	Blind cap	25.	U-ring
8.	Valve pin	17.	Plug screw	26.	Pan head screw
9.	Arm spring	18.	Washer		

Fig. 2-36

(3) Remove the stop screw lock nut from pump body 3.

(4) Remove the pilot screw and spring from the carburetor body.

(5) Remove the main adjuster screw, and remove the main adjuster screw spring, washer and O-ring.

(6) Remove the three pan head screws from top of the carburetor body, and remove the plate and gasket.
Remove the slow jet and partial jet.

(7) Remove the pan head screw, and remove the stay plate.
Using the 13 mm. T-handle wrench, remove the bolt, and remove the throttle bracket.

(8) Remove the throttle stop screw and stop screw spring.

(9) Never disassemble the choke butterfly, throttle butterfly and throttle shaft.

(10) The right-hand carburetor has a link shaft and two gears for easy adjustment of the main adjusting screw.
Remove the main adjusting screw, together with the gears, using a slotted-head screwdriver (medium).
Remove the pan head screw, and remove the link shaft.

Note:

- Never attempt to stretch the main diaphragm spring. If stretched, the spring constant will be changed, and as a result, the fuel level adjusting screw must be readjusted.
- The arm spring should also be handled with special care. If it is stretched, the spring constant will be changed, and as a result, the correct fuel flow rate adjustment will become impossible.

2-5-8. Cleaning and Inspection (GPX433F)

(1) Check the throttle link mechanism, choke butterfly valve and other moving parts for damage.
If the throttle link mechanism and/or the choke butterfly valve is faulty, replace.

(2) Check carburetor body and pump body, and if cracked or holed, replace.

(3) Check the threaded portion of the stop screw, and if damaged, replace.

(4) Check the check valve for cracks and holes. Replace if damaged.

(6) Check the lever pin, diaphragm arm, valve seat, and needle valve for wear or breakage. If excessively worn or broken, replace.

(7) Check the spring for spring fatigue. If fatigued excessively, replace.

(8) Check the pump body gaskets, upper and lower. Replace any defective one.

(9) Check the pump diaphragm. If bent or holed, replace.

(10) Check the gasket located over the pump diaphragm. If damaged, replace.

(11) Check the accelerator pump diaphragm.
If bent or holed, replace.

(12) Check the metering needles on the ends of main adjuster screw and pilot screw. If any needle is damaged, the needle seat is considered to be scratched. Replace the carburetor body.
(13) Check the idle discharge hole and partial discharge hole for clogging. If clogged, clean with compressed air. Never use a wire.
(14) Check the main nozzle for clogging, and if necessary, blow with compressed air.
(15) Check the main adjuster link shaft. If the shaft is bent, replace.
(16) If the main adjuster screw O-ring is swollen, scratched, or broken, replace the O-ring.

2-5-9. Assembly (GPX433F)

Reverse the procedure for disassembly.

Note:

- The assembly operation should be performed with the main diaphragm completely in the groove in pump body 2.
- Take care so that the main diaphragm is installed in the correct position. Fit the rubber around the check valve rim into the pump body groove.
- The throttle mechanism should not be disassembled.
- When assembling, be careful not to reverse the position of gaskets. Carburetor failures are often caused by dust and incorrect service.
- Install pump body 3 and pump body 4 together, and tighten the bolts in a crosswise pattern.

2-5-10. Installation (GPX433F)

For installation, reverse the procedure for removal.
No tightening torque for carburetor mounting nuts can be specified for reason of its construction, and therefore, they should be carefully tightened with a wrench.

2-5-11. Adjustments (GPX433F)

(1) The carburetor is properly adjusted and subjected to a stringent test at the factory, and therefore, it should not be disassembled or adjusted unnecessarily.
However, according to operating conditions or geographical conditions (weather, altitude, etc.), it may require readjustment, cleaning and inspection. In this case the following parts must be readjusted.
1) Adjusting screw to control the pressure (fuel level) in the regulator chamber.
2) The pilot screw to control the mixture when the engine idles.
3) The throttle stop screw to control the idling speed.
4) The main adjuster screw to control the mixture when throttle opening is larger.
5) Slow jet and partial jet to control the mixture in the range from ilding to medium speeds for smooth acceleration.

Note:
As the throttle opening increases, the pilot screw, slow jet and partial jet functions, in that order.
For details, refer to the carburetor manual.

(2) Adjusting the regulator chamber internal pressure (fuel level)
The performance of the diaphragm type carburetor depends greatly on the condition of the regulator, and therefore, the regulator must be adjusted very carefully.
To adjust, first remove the fuel level pipe cap, and run the engine at idling speed so that the fuel moves up into the fuel level pipe. Adjust the fuel level as specified with the adjusting screw (located in the carburetor bottom).
The fuel level must be maintained at the mating surface of the pump body with the carburetor body.
Turning in the adjusting screw raises the fuel level, while turning out lowers the fuel level. After the adjustment, be sure to tighten the lock nut.
Fuel level and allowable difference in fuel level:
$+5 \begin{smallmatrix} +2 \text{ mm.} \\ -5 \text{ mm.} \end{smallmatrix}$ (0.28 in.)

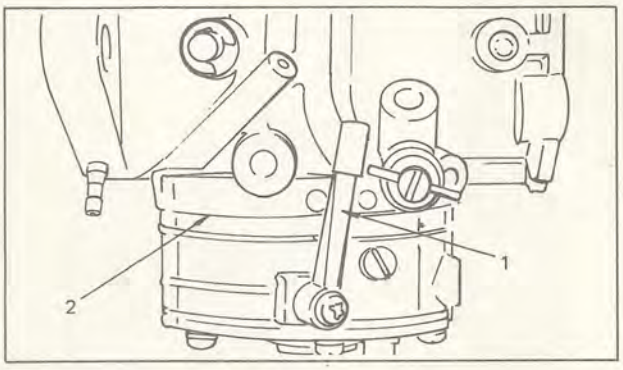

1. Fuel level pipe
2. Standard fuel level

Fig. 2-37

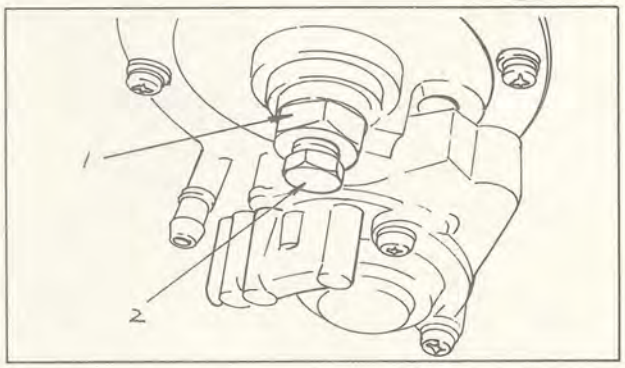

1. Lock nut
2. Adjusting screw

Fig. 2-38

Note:

The regulator will not operate while the engine is at rest. Therefore, it is necessary to turn the adjusting screw about 6 turns into pump body 3 before starting the engine, keep the engine idling, and adjust the fuel level.

Be sure to keep the cap placed on the fuel level pipe while driving.

(3) The throttle stop screw, pilot screw, slow jet, partial jet, and main adjusting screw are set at the factory so that they match the operation on level land in winter.

Therefore, these screws and jet may require readjustments depending on geographical conditions.

1) Idle speed adjustments

Idle-speed adjustments must be made with the pilot screw (to regulate the mixture) and the throttle stop screw (to regulate the idling speed) so that the engine idles smoothly.

Whether or not engine idle mixture is correctly adjusted will also affect the starting and acceleration of the engine. The pilot screw should be backed off 1-3/8 turns from a lightly seated position.

With the pilot screw in this position, the mixture will be slightly richer.

Throttle stop screw adjustment

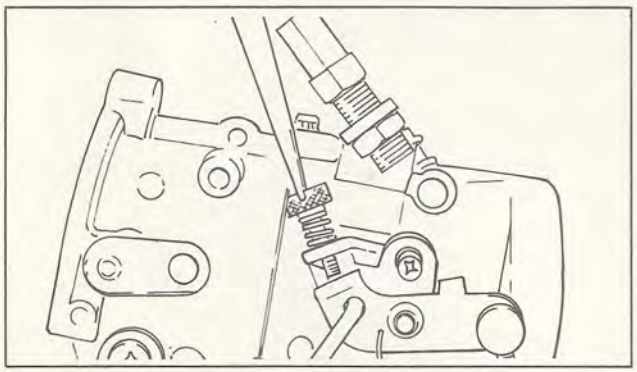

Fig. 2-39

Pilot screw adjustment

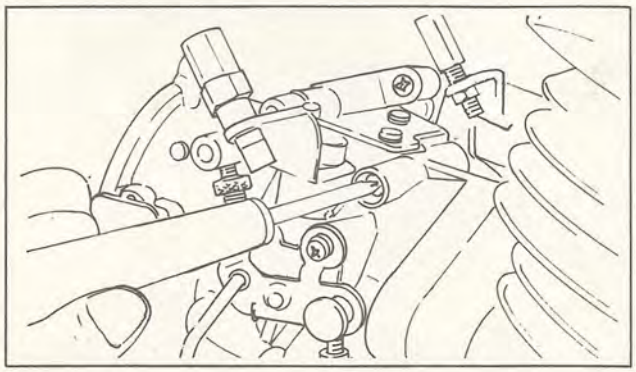

Fig. 2-40

2) Procedure for adjustment.

a) Set the pilot screw and the main adjusting screw to specification at the same time.

Settings at factory:

Settings at factory	GPX433F
Pilot screw	(L, R) 1-3/8
Slow jet	#45
Partial jet	#65
Main adjuster screw	(L, R) 1 ± 1/8

b) Turn the pilot screw in or out 1/8 turn each time, until the engine idles fast.

c) Back out the pilot screw aditional 1/8 — 1/4 turn to provide enough fuel for proper acceleration.

d) Perform a running test, and warm up the engine again. Then adjust the throttle stop screw so that the engine runs at the specified idling speed.

3) Slow jet and partial jet adjustments.

The #45 slow jet and #65 partial jet are installed at the factory, but if the engine will not pick up speed smoothly when accelerated at low altitudes, these jets should be replaced by one step large ones.

On the contrary, if the engine runs roughly, replace with one step smaller ones.

Jets available

45 48 50 52 (Slow jets) 60 62 65 68 70 (Partial jets)

Note:

Both slow jet and partial jet are of the same type, but have different calibration numbers.

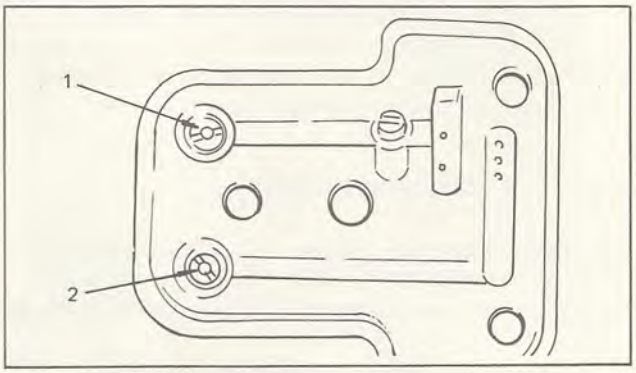

1. Slow jet
2. Partial jet

Fig. 2-41

4) Main adjusting screw adjustment.

The main adjusting screw controls the mixture when the snowmobile runs at speeds from medium to high.

It should be adjusted so that the engine runs smoothly with the richest possible mixture.

This is very important in order to prevent the engine from overheating.

5) Procedure for adjustment.

a) Back out the main adjusting screw as specified.
   Turns out: 1 ± 1/8

b) Perform a running test. To test, accelerate the snowmobile by quickly pulling the throttle lever to full-throttle position from idling position.

c) Perform a high-speed running test, and find the position of the main adjuster screw where the engine performance is the best.
   The adjustment should be made by turning the adjusting screw 1/8 turn each time.

d) After the high-speed running test, check the spark plug for discoloration. Adjust the main adjuster screw so the spark plug porcelain has a tan color at maximum high speed load.

e) Keep the snowmobile running at high speed, and test the engine operating condition. Repeat the operations 2) to 5) above, and set the main adjuster screw in the best position to achieve good spark plug color.

Note:

If the factory setting is improper, making the mixture too rich or too lean, the main adjusting screw should be adjusted, starting from the position where it is back out about 1/4 turn.

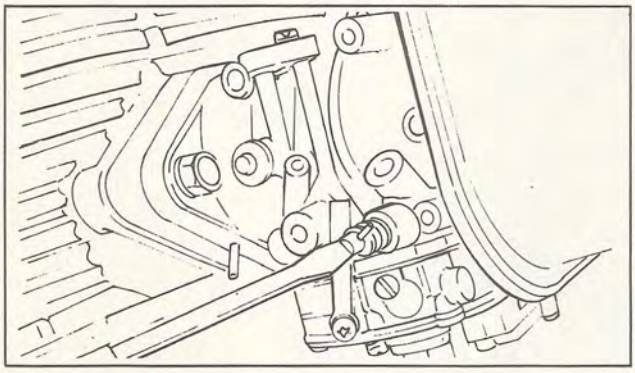

Fig. 2-42

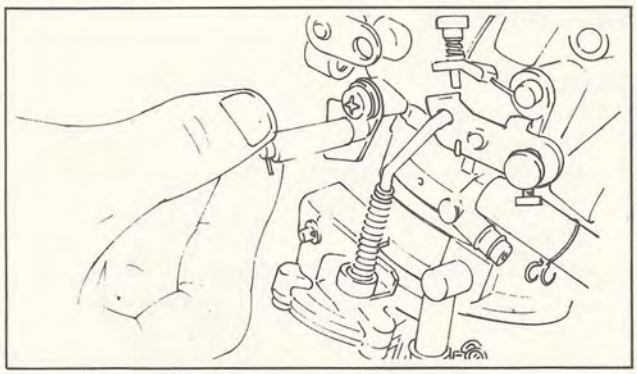

Fig. 2-43

2-5-12. Carburetor with Accelerator Pump (GPX433F)

The accelerator pump is basically the same as in the GP433F. For details, refer to the GP338/GP433F Service Manual.

2-6. Oil Pump

Service Tools:

- 6-mm. open-end wrench
- 10-mm. socket wrench
- 10-mm. open-end wrench
- 13-mm. open-end wrench
- Circlip pliers
- Phillips-head screwdriver (medium)

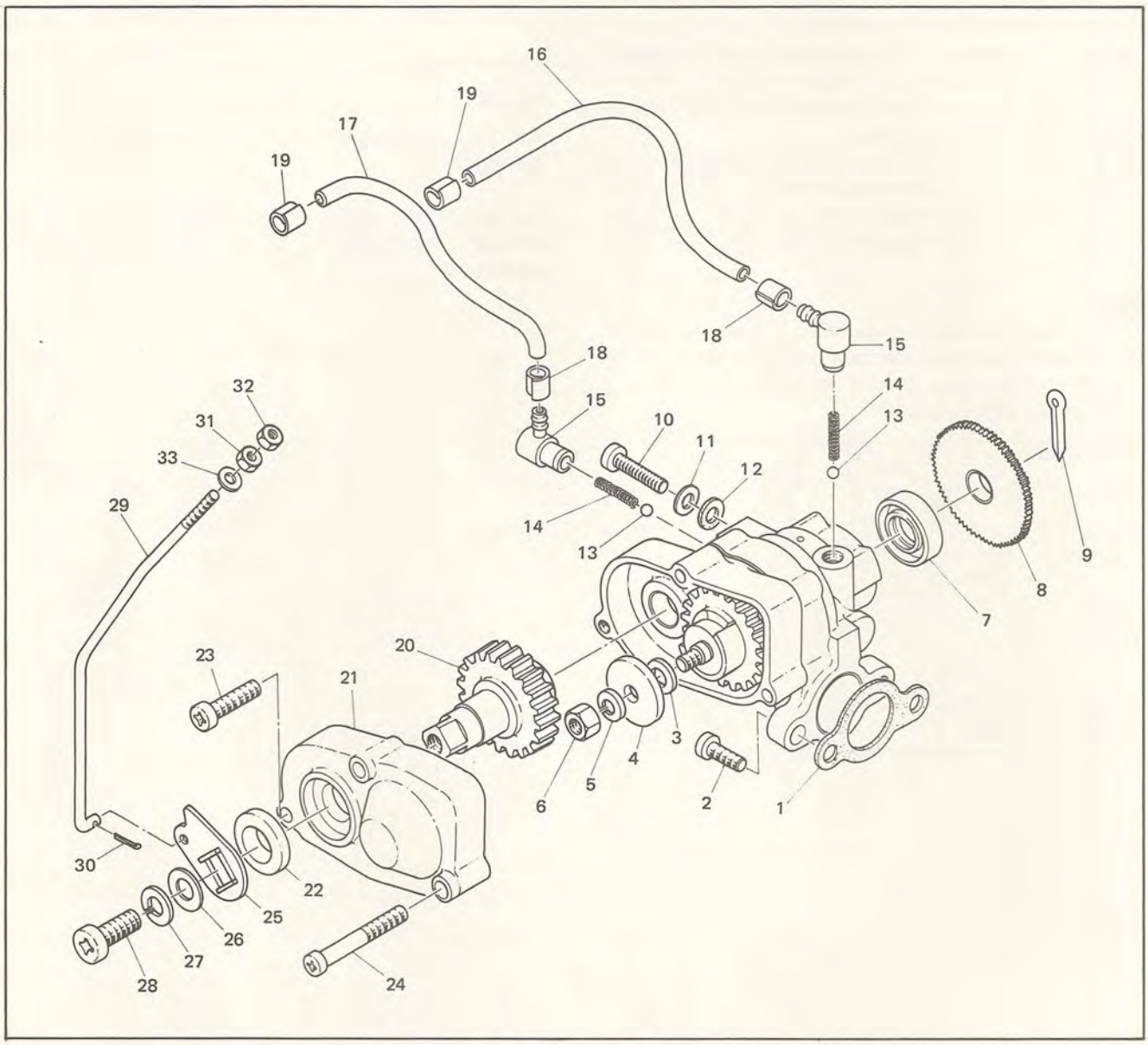

1. Pump case gasket
2. Pan head screw
3. Plunger shim
4. Adjusting plate
5. Spring washer
6. Nut
7. Oil seal
8. Starter plate
9. Cotter pin
10. Pan head screw
11. Plain washer
12. Breather bolt gasket
13. Ball (5/32 inch)
14. Check ball spring
15. Nozzle
16. Delivery pipe left (3-160)
17. Delivery pipe left (3-80)
18. Delivery pipe clip
19. Delivery pipe clip
20. Pump control gear
21. Adjust pulley cover
22. Oil seal
23. Pan head screw
24. Pan head screw
25. Pump control lever
26. Plain washer
27. Spring washer
28. Pan head screw
29. Pump control rod
30. Cotter pin
31. Nut
32. Nut
33. Washer

Fig. 2-44

For disassembly, removal, cleaning, inspection and adjustments, refer to the GP338F/GP433F Service Manual. Particular attension should be paid to the position of pump control gear and pump delivery pipe when installing.

Note:

1) Align the mark △ on the oil pump control gear with the guide pin, and set the oil pump control gear. (Fig. 2-45)

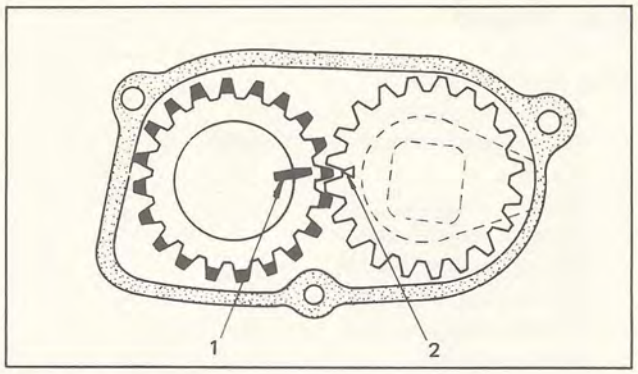

1. Guide pin
2. △Mark

Fig. 2-45

2) As illustrated, install the oil pump delivery pipe. Never attempt to change the pipe length by cutting or use a longer pipe for installation. (Fig. 2-46)

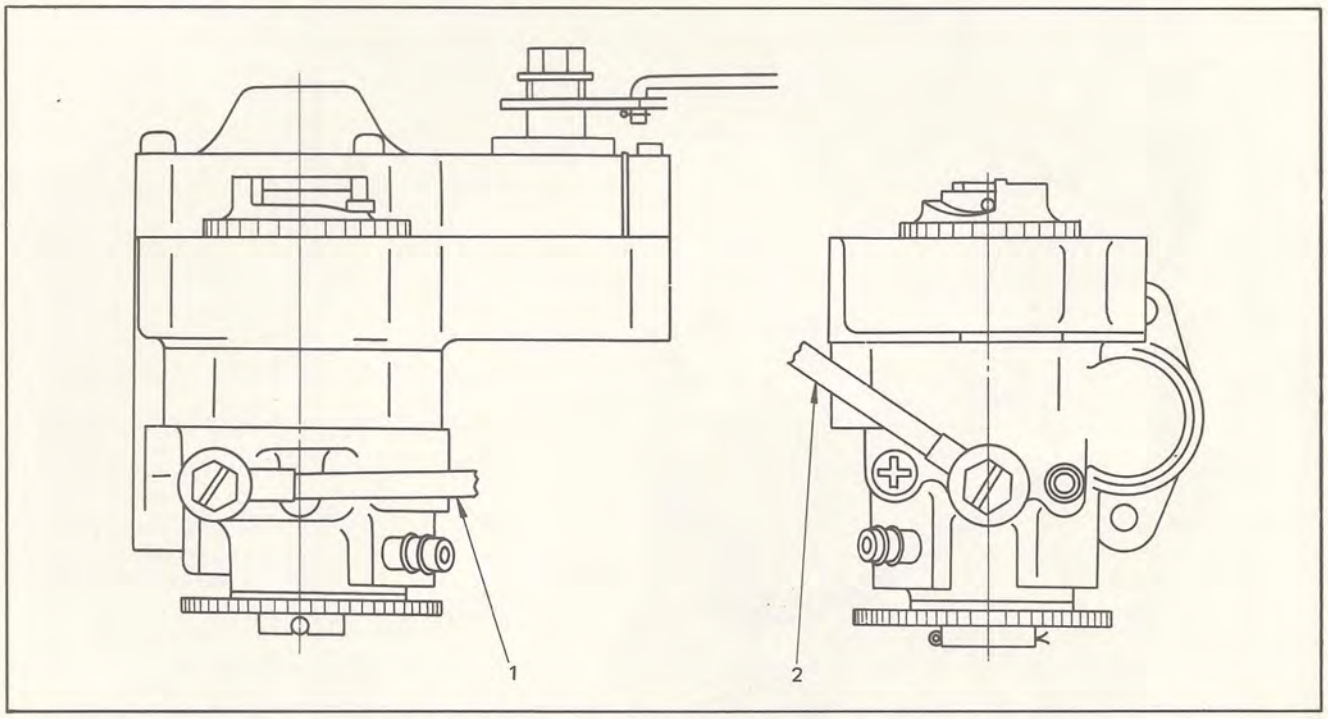

1. Delivery pipe left 276-13161-00 (L=160 mm.) to the right side of carburetor.
2. Delivery pipe left 395-13161-00 (L=80 mm.) to the left side of carburetor.

Fig. 2-46

3) The oil pump control rod adjustment should be made with the throttle fully opened. As illustrated, using two nuts, align the mark on the oil pump case cover with the hole in the control lever end. (Fig. 2-47)

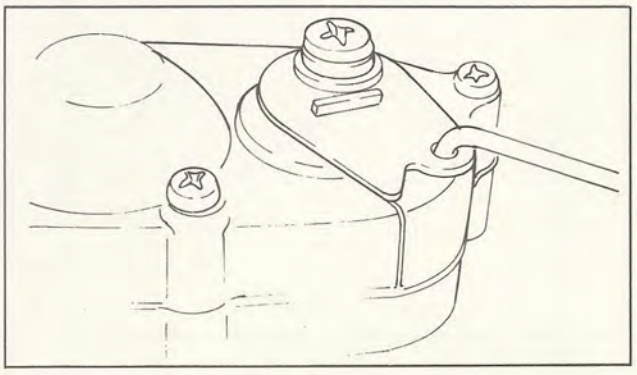

Fig. 2-47

2-7. Engine

Tools Required:

- Phillips-head screwdriver (large)
- Phillips-head screwdriver (medium)
- Punch
- 10-mm. socket wrench
- 13-mm. socket wrench
- 13-mm. socket wrench
- 17-mm. socket wrench
- 17-mm. socket wrench with universal joint
- Torque wrench
- Soft-faced hammer
- Needle-nose pliers
- Scraper (for carbon removal)
- Cylinder gauge
- Micrometer
- Feeler gauge
- Vernier calipers
- V-blocks
- Dial gauge
- Dial gauge stand
- Surface plate
- Copper-head hammer
- Steel-head hammer

2-7-1. Disassembly

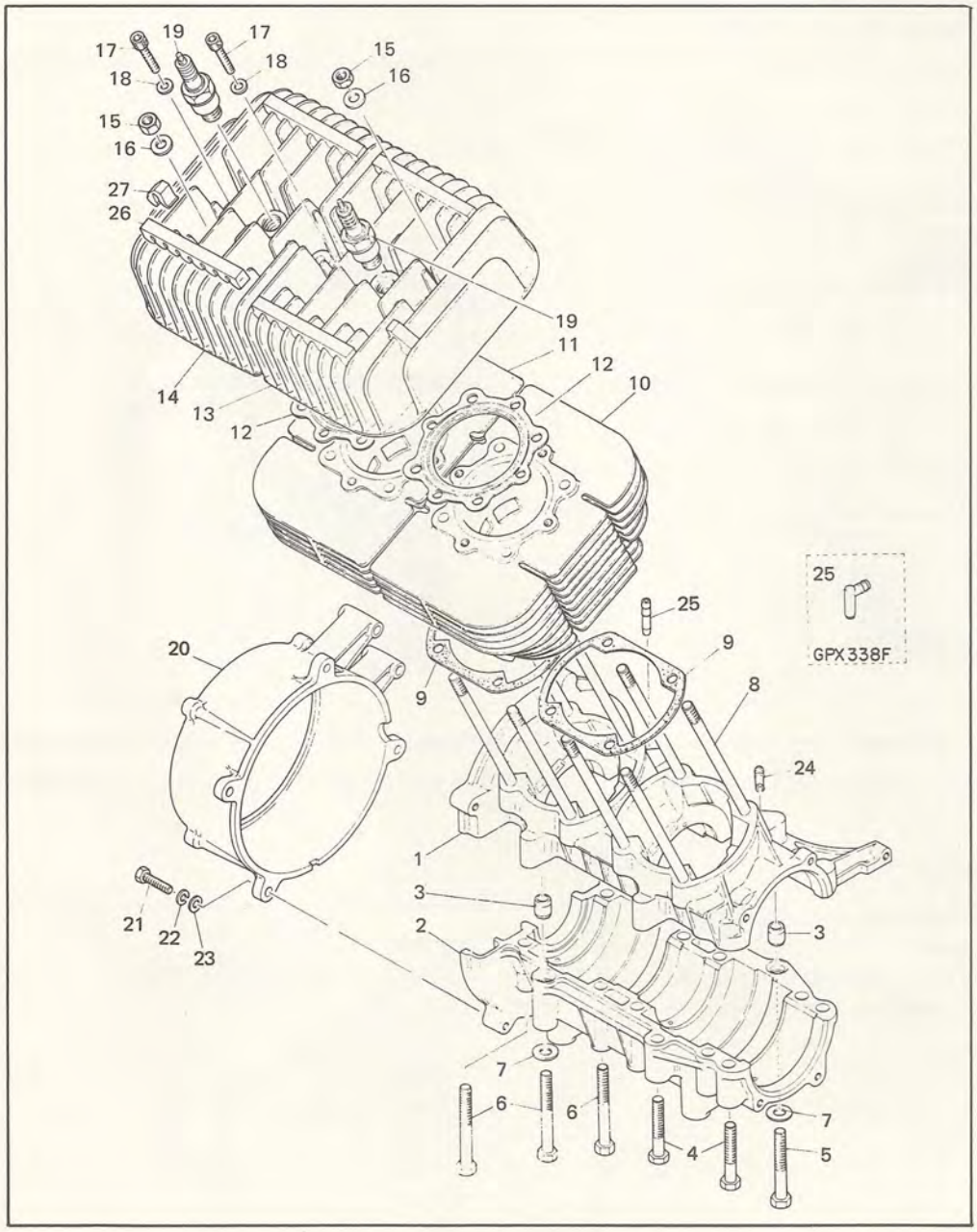

1. Crank case 1
2. Crank case 2
3. Dowel pin (9.8-12-16)
4. Bolt
5. Bolt
6. Bolt
7. Plain washer
8. Cylinder holding bolt
9. Cylinder gasket
10. Left cylinder
11. Right cylinder
12. Cylinder head gasket
13. Cylinder left head
14. Cylinder right head
15. Nut
16. Plain washer
17. Bolt
18. Plain washer
19. Spark plug (B-9EV)
20. Crankcase cover
21. Bolt
22. Spring washer
23. Plain washer
24. Joint pipe
25. Joint pipe
26. Absorber 1
27. Absorber 2

Fig. 2-48

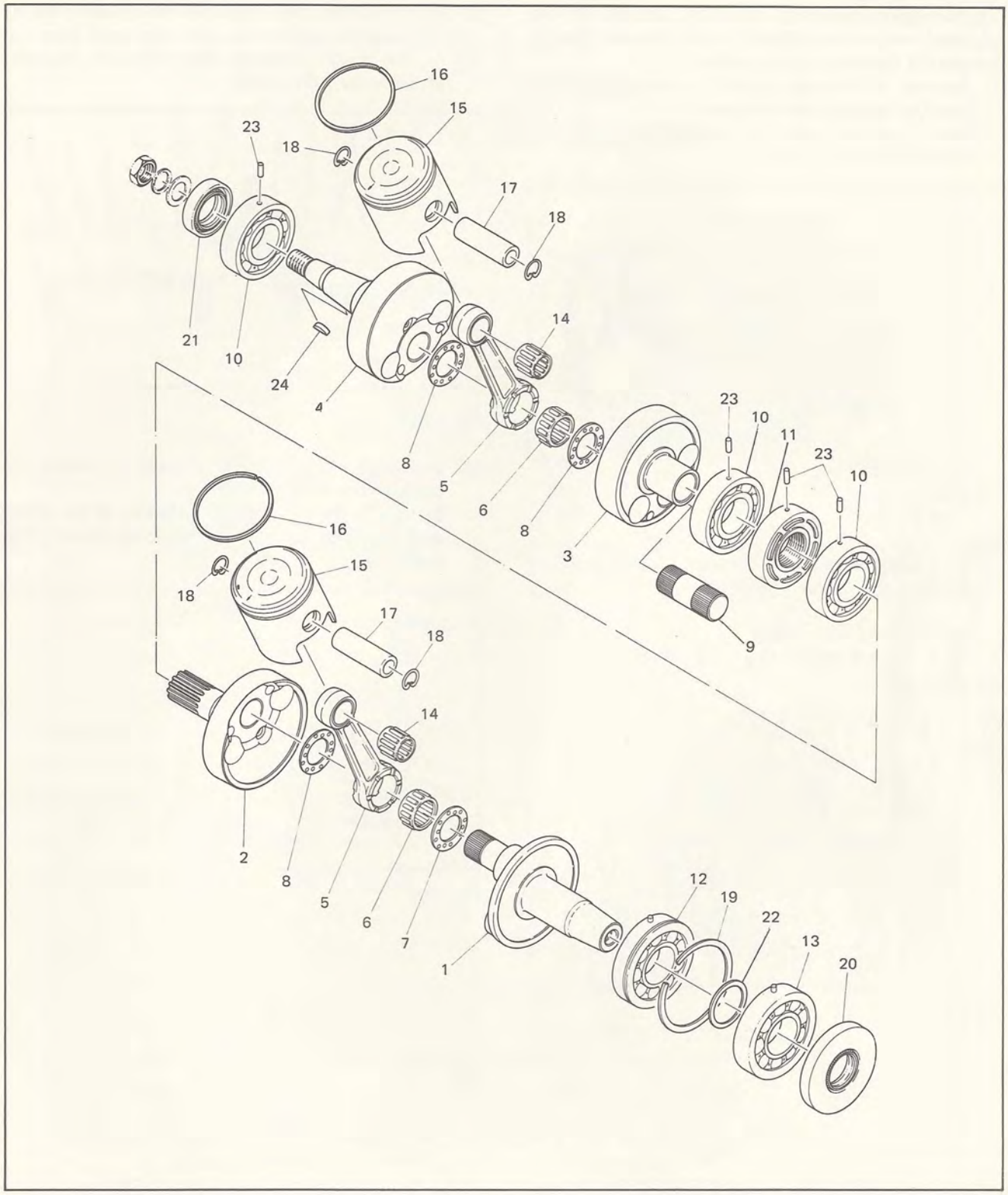

1. Left crank 1
2. Right crank 1
3. Left crank 2
4. Right crank 2
5. Connecting rod
6. Con-rod bearing
7. Crank pin washer
9. Crank pin
10. Bearing
11. Labyrinth seal
12. Bearing
13. Bearing
14. Con-rod small end bearing
15. Piston
16. Piston ring
17. Piston pin
18. Piston pin clip
19. Circlip
20. Oil seal
21. Oil seal
22. Washer
23. Dowel pin
24. Woodruff key

Fig. 2-49

For disassembly, assembly, inspection, cleaning and adjustments, refer to the GP338F/GP433F Servide Manual. Observe the following points carefully.

(1) Remove the cylinder heads. Each head is held down by four nuts and four bolts.
Break each nut loose, in pattern, before removing completely. (Fig. 2-50)

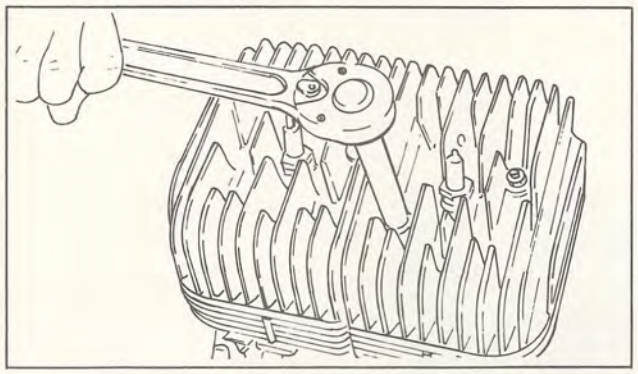

Fig. 2-50

Note:

On reassembly, the head bolts are torqued, gradually and in a cross-hatch pattern.

A: 16.6 — 19.5 ft-lbs. (2.3 — 2.7 m-kgs.)
B: 14.5 — 16.6 ft-lbs. (2.0 — 2.3 m-kgs.)
(Fig. 2-51)

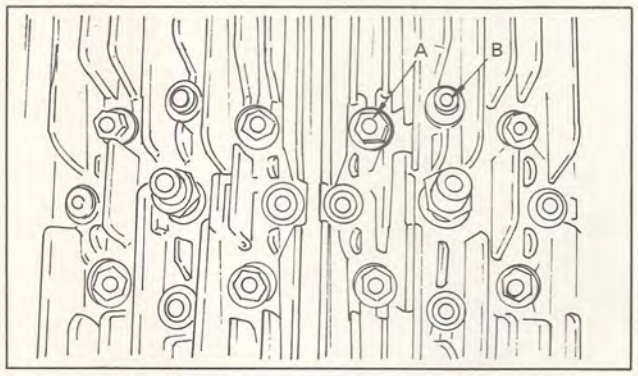

Fig. 2-51

(2) When installing both right and left cylinders, the intake port flanges must be lush with each other. If not, the throttle valve and choke valve will not operate smoothly. (Fig. 2-52)

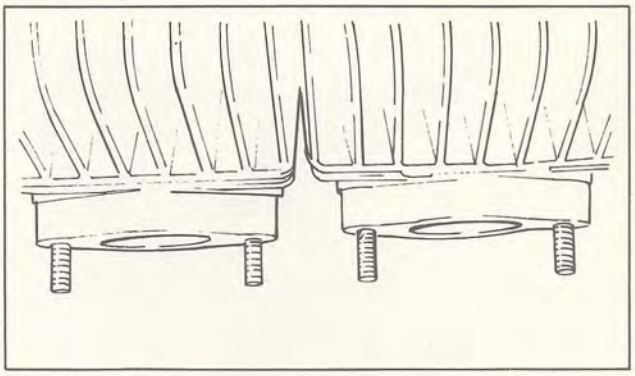

Fig. 2-52

(3) Crankshaft run-out can be checked by placing the crankshaft ends in V-blocks.
By using a dial indicator the deflection of the crankshaft should be measured at the places shown. (Fig. 2-53)

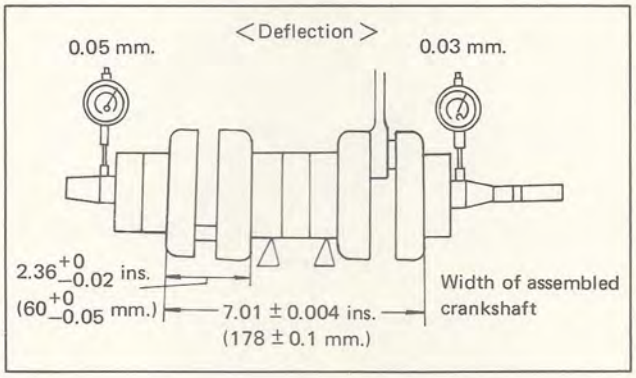

Fig. 2-53

CHAPTER 3. POWER TRAIN

3-1. Secondary Sheave

Tools Required:

- 19-mm. off-set wrench
- 13-mm. open-end wrench
- Soft-faced hammer
- Punch
- Steel head hammer
- Phillips head screwdriver (large)
- Primary sheave installer/remover 1
- Primary sheave installer/remover 2
- 17-mm. open-end wrench
- 17-mm. open-end wrench
- Circlip pliers
- Chisel
- Primary fixed sheave puller bolt

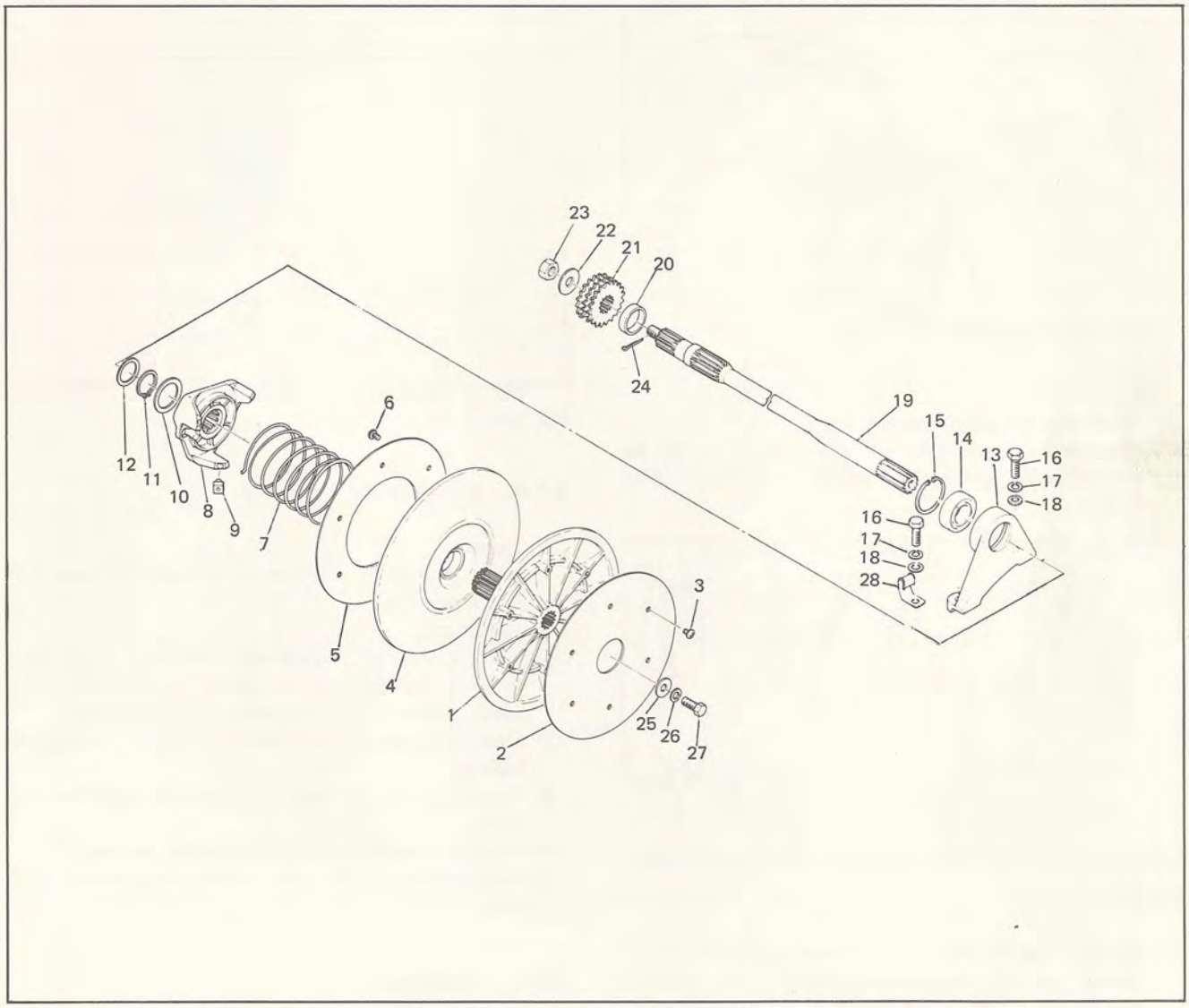

1. Secondary fixed sheave complete
2. Plate 1
3. Pan head screw
4. Secondary sliding sheave complete
5. Plate 2
6. Pan head screw
7. Secondary spring
8. Secondary spring seat
9. Ramp shoe
10. Shim
11. Circlip
12. Distance collar 1
13. Bearing housing
14. Bearing
15. Circlip
16. Bolt
17. Spring washer
18. Washer
19. Secondary shaft
20. Collar
21. Chain drive sprocket
22. Plate washer
23. Nut
24. Cotter pin
25. Plate washer
26. Spring washer
27. Bolt
28. Wire clip

Fig. 3-1

3-1-1. Removal

(1) Removing the primary sheave
Install the special tool (primary sheave installer/remover 1) on the primary sliding sheave and primary fixed sheave. Straighten the lock washer using the chisel, and remove the bolt. Remove the primary sheave cap.
Next, remove the primary sliding sheave and the primary fixed sheave, using the primary fixed sheave puller bolt (special tool). The V-belt can now be removed from the sedondary sheave. (Fig. 3-2)

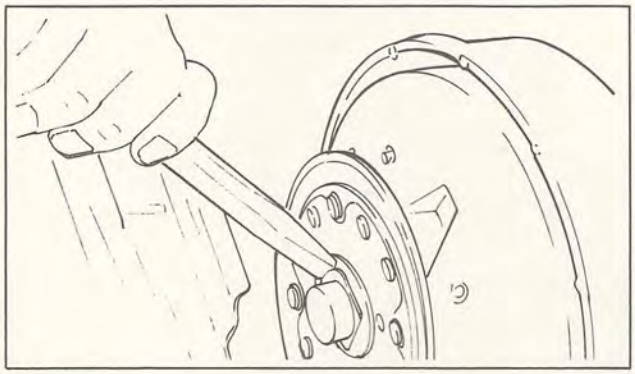

Fig. 3-2

(2) Removing the secondary sheave
Remove the secondary sheave assembly using the 17-mm. open-end wrench (or off-set wrench). (Fig. 3-3)

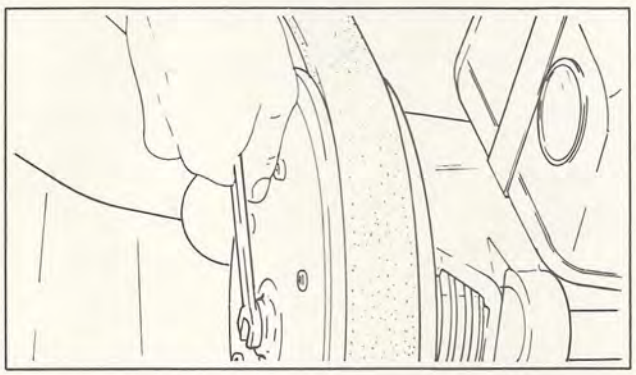

Fig. 3-3

(3) Remove the distance collar, and remove the circlip using pliers. Remove the shim, spring seat, secondary spring, plate 2 and secondary sliding sheave complete. (Fig. 3-4,3-5)

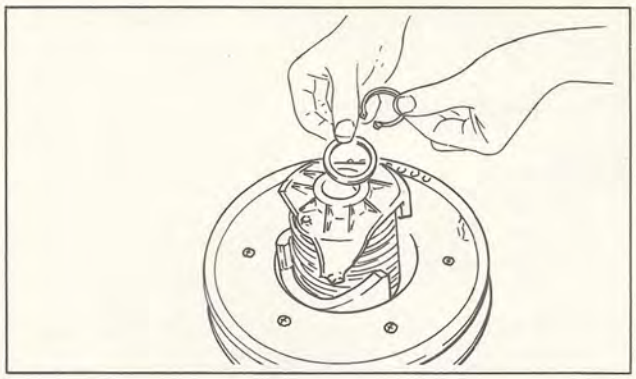

Fig. 3-4

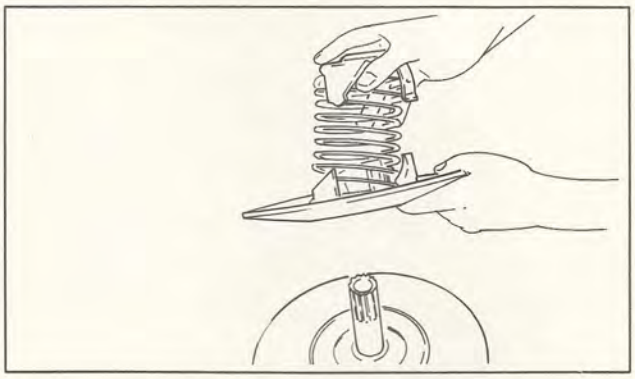

Fig. 3-5

3-1-2. Cleaning and Inspection

(1) Cleaning
All parts should be washed in solvent and blow with compressed air.

(2) Inspection
1) Check the sliding sheave and fixed sheave for burrs which may damage the V-belt. Also check for bends. Burrs should be removed by sandpaper.
2) Check the secondary spring for fatigue. If fatigued, replace.
3) Check the ramp shoe and if worn or deformed, replace.
4) Check the spring seat, and if cracked, replace.
5) Retighten bolts and nuts. Add grease before each race.

3-1-3. Assembly

(1) Grease the shaft of the secondary fixed sheave complete, and install the secondary sliding sheave complete.
Turn the secondary spring and spring seat 257° clockwise (in the case of GPX338F) or 137° clockwise (in the case of GPX433F) and install.
Next, install the shim and circlip. Install the distance collar.
Grease the secondary shaft.

Secondary sheave tightening torque (left)

21.70 — 32.55 ft-lbs. (3.0 — 4.5 m-kgs.)

Secondary spring color code

GPX338F	Yellow
GPX433F	Not painted

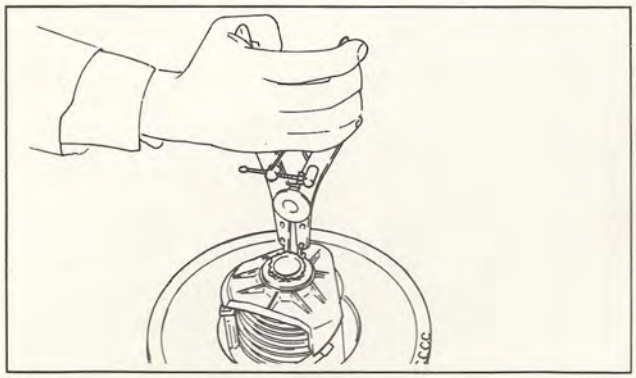

Fig. 3-6

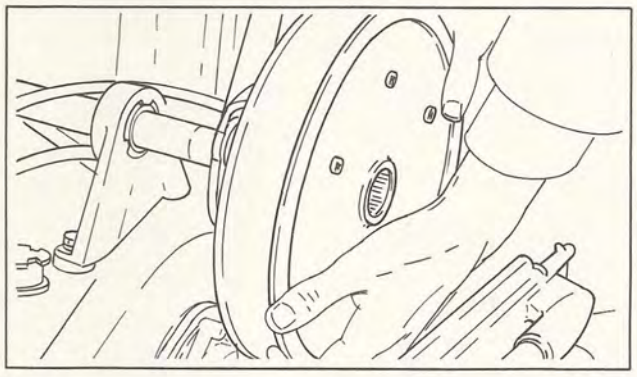

Fig. 3-7

(2) Install the bushing, spring seat, V-belt, compression spring, and primary sliding sheave complete on the primary fixed sheave. Compress the compression spring using primary sheave installer/remover 2 and install primary sheave installer/remover 1. (Figs. 3-8,3-9)

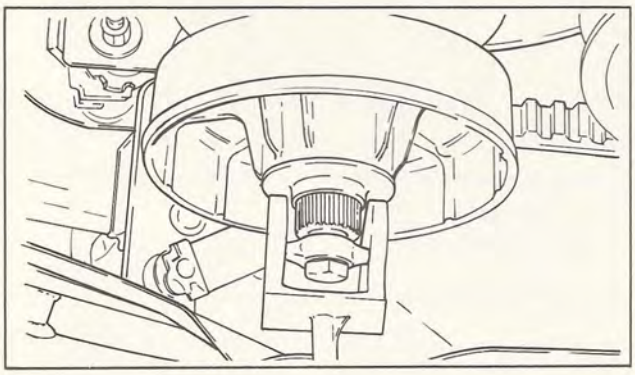

Fig. 3-8

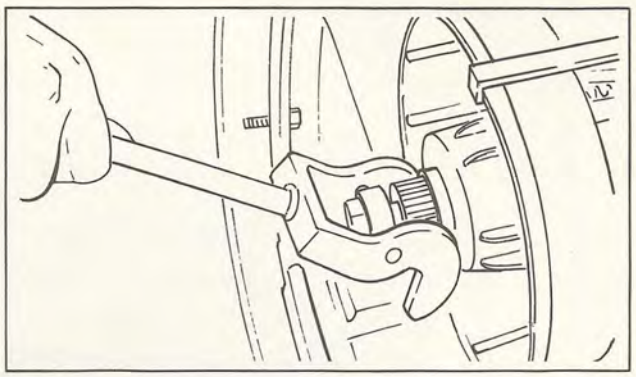

Fig. 3-9

(3) Remove primary sheave installer/remover 1 and 2 and install the cam, primary sheave cap complete and lock washer. Tighten the bolt using the 22-mm. open-end wrench (or off-set wrench).

Tightening torque:
First tighten to 43.4 ft-lbs. (6.0 m-kgs.)
Then loosen and retighten to 32.5 ft-lbs. (4.5 m-kgs.)

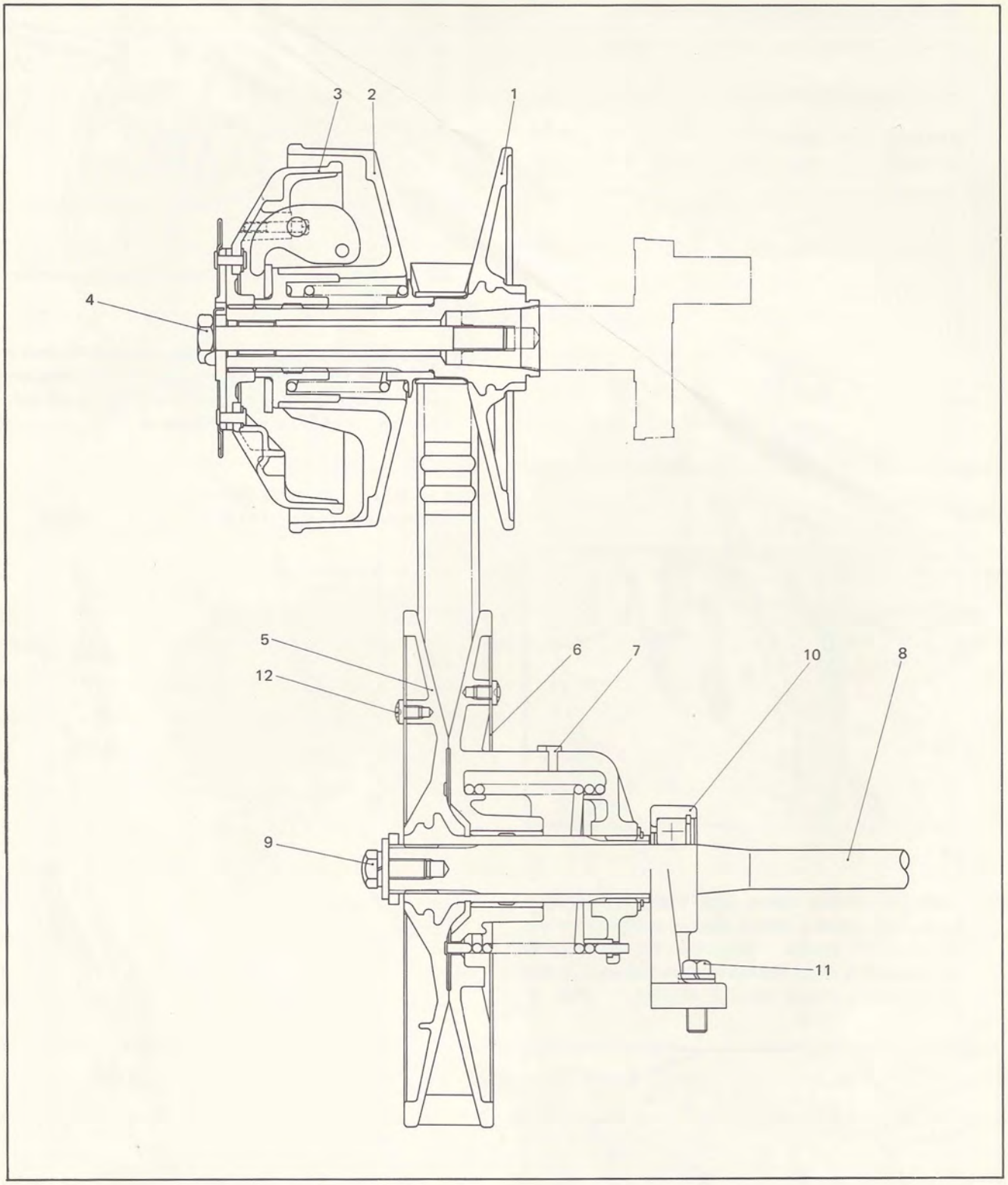

1. Primary fixed sheave complete
2. Primary sliding sheave complete
3. Primary sheave cap complete
4. Hexagon bolt
5. Secondary fixed sheave complete
6. Plate 2
7. Ramp shoe
8. Secondary shaft
9. Bolt
10. Bearing housing
11. Bolt
12. Pan head screw

Fig. 3-10

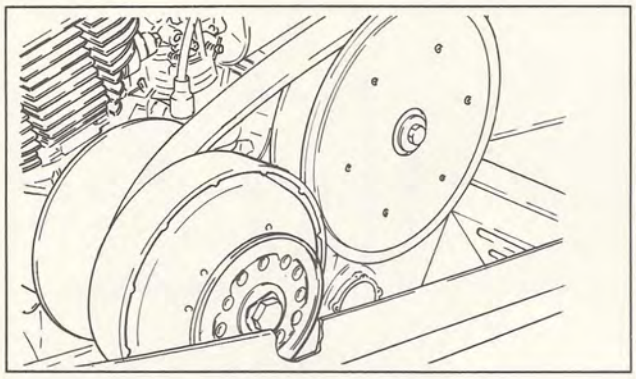

Fig. 3-11

Note:

After assembling, thoroughly clean both primary and secondary sheaves so they are free of oil.

3-1-4. Adjustments

(1) Sheave adjustment

If the center-to-center distance between the primary sheave and the secondary sheave is incorrect, or if the offset between both two sheaves is improper, the V-belt will wear faster, and sheave shifting can not be correctly done.

1) Sheave center-to-center adjustment

Loosen the four lower bracket mounting bolts, and set the sheave gauge as illustrated. Place the 0.04 in. (20 mm.) wide portion of the sheave gauge over the secondary shaft, and if the other end of the gauge contacts the primary shaft, the distance from center-to-center of the sheaves is correct.

If not, an adjustment is needed by moving the engine back and forth.

Correct distance: 10.6 ± 0.04 ins. (270 ± 1 mm.)

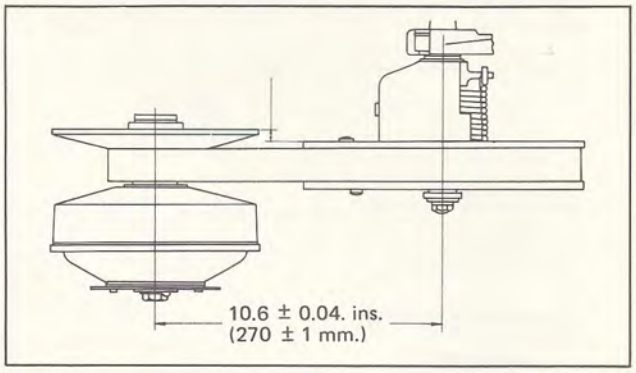

Fig. 3-12

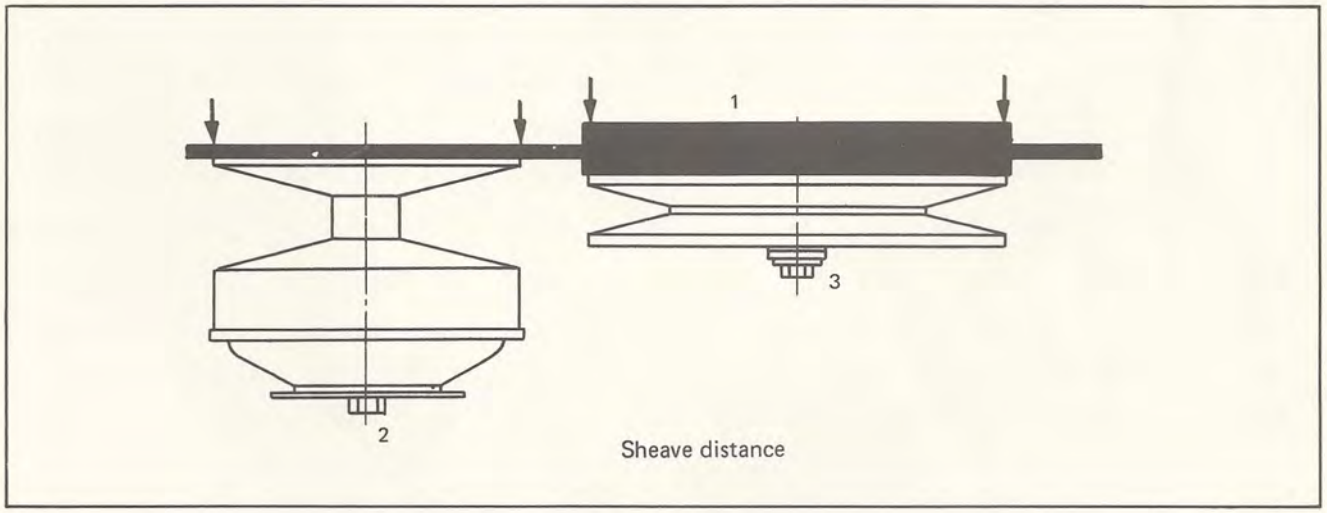

1. Sheave gauge
2. Bearing (Primary shaft)
3. Secondary shaft

Fig. 3-13

2) Sheave offset adjustment
   Loosen the four upper bracket mounting bolts, and set the sheave gauge as illustrated.
   If the gauge contacts the secondary sliding sheave and the primary fixed sheave at four places at the same time, the offset is correct.
   If not, adjust by shifting the engine sideways.
   The sheave gauge is designed to make three different offset measurements 0.24 in., 0.43 in. and 0.63 in. (6 mm., 11 mm. and 16 mm.)
   Correct offset: 0.48 in. (11 mm.)
   (Fig. 3-10)

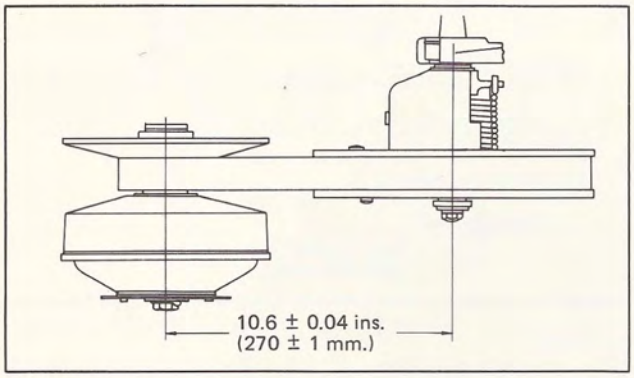

Fig. 3-14

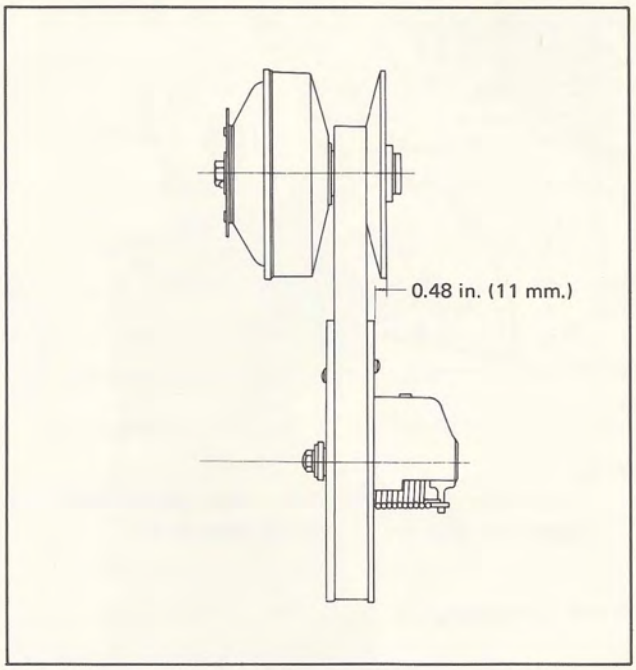

Fig. 3-15

3-2. Disc Brake

Tools Required:
- Pliers
- 19-mm. open-end wrench
- Primary sheave fixed puller bolt
- Primary sheave installer/remover 1 and 2
- 17-mm. open-end wrench
- 10-mm. open-end wrench
- 22-mm. open-end wrench

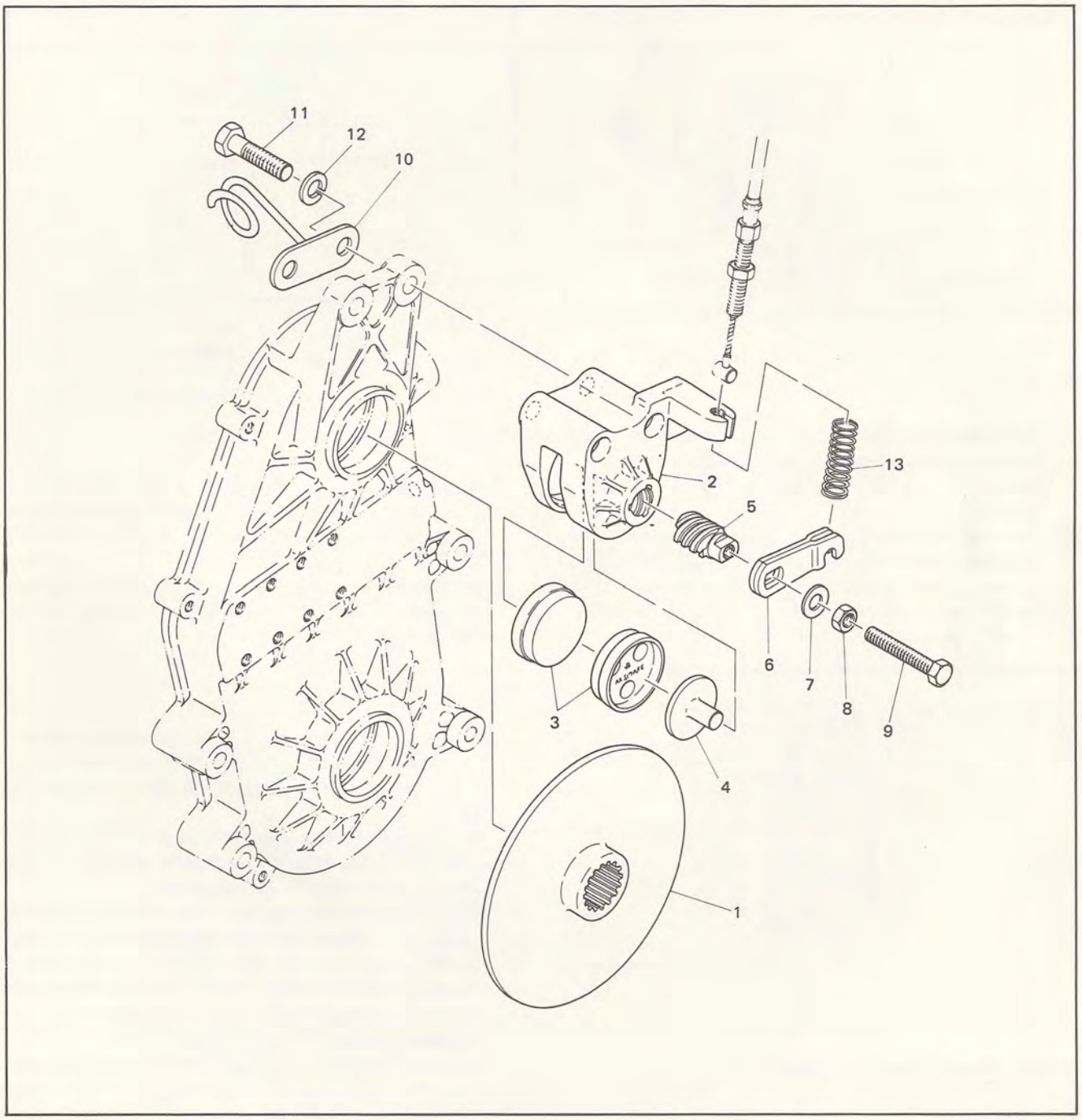

1. Brake disc
2. Caliper body 1
3. Caliper pad
4. Back-up plate
5. Cam
6. Brake lever
7. Plain washer
8. Nut
9. Screw
10. Starter handle holder
11. Bolt
12. Spring washer
13. Compression spring

Fig. 3-16

3-2-1. Removal

(1) Loosen the brake adjusting screw attached to caliper body 1, and the brake wire can be disconnected from the brake lever. Remove the two starter handle holding bolts which also mount caliper body 1 to the chain housing. (Fig. 3-17)

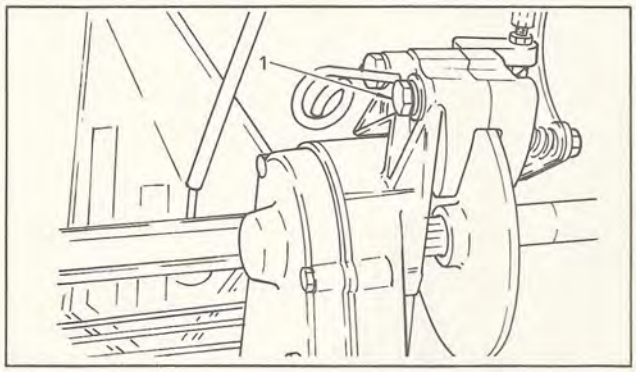

1. Bolt

Fig. 3-17

(2) To remove the brake disc, first remove the primary sheave assembly and secondary sheave assembly. (Refer to 3-1 Primary Sheave and Secondary Sheave.)
Remove the chain drive sprocket nut holding the secondary shaft inside the bearing housing and chain housing, using the 22-mm. off-set wrench. The secondary shaft and brake disc can now be removed. (Fig. 3-18)

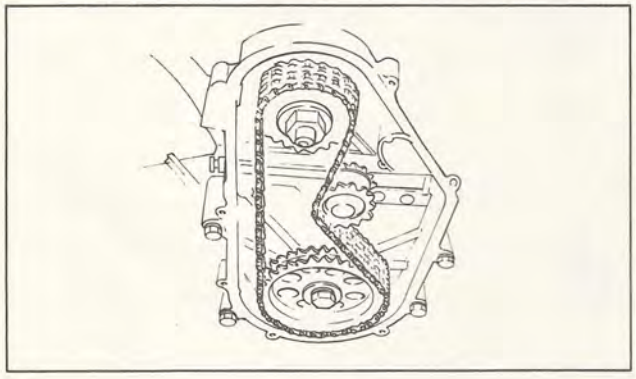

Fig. 3-18

3-2-2. Cleaning and Inspection

(1) Cleaning
Wash all parts in solvent, and wipe with a clean, dry cloth. Particulary, the brake disc and brake pads must be cleaned completely.

(2) Inspection
1) Check the brake pads for wear.
If the measurement of pad is less than 4 mm., replace. (Fig. 3-19)

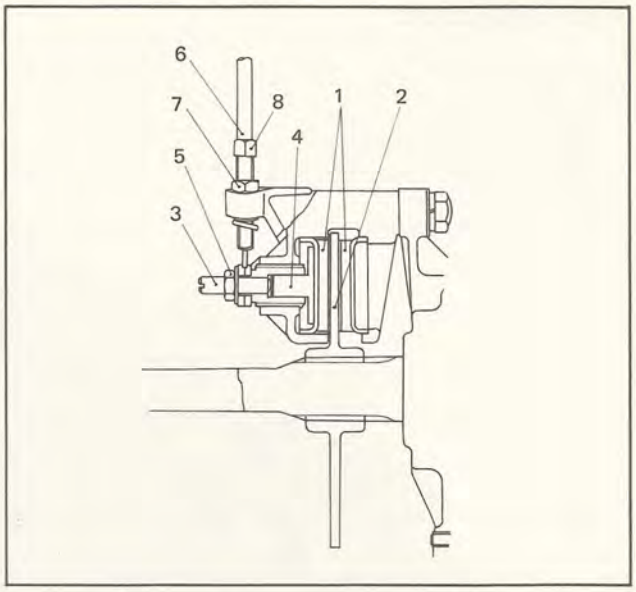

1. Lining pad complete
2. Disk brake
3. Back screw
4. Back-up plate
5. Nut
6. Brake wire
7. Lock nut
8. Adjusting bolt

Fig. 3-19

2) Check the brake disc for bends. If bent, replace.
If the brake disc has severe scratches, it should be replaced, because fast wear will result on the brake pads.

3) If the brake lever will not return smoothly to the rest position because of a fatigued return spring, replace the return spring.

3-2-3. Installation

(1) Install the secondary shaft, bearing housing assembly and brake disc, and install the secondary shaft in the chain housing. Then tighten the chain drive sprocket nut.
Apply Shell Alvania grease #2 or #3 to the contact area of the disc with the secondary shaft and to the threads of the brake adjusting screw.
Next, install the housing cap. Be sure to replace the cotter pin. Secure the secondary shaft on the chain housing side with the bolt, and secure the bearing housing with two bolts. Then install the secondary sheave assembly, V-belt, and primary sheave.
Adjust the play of the secondary sheave.
Install caplier body 1 on the chain housing, and connect the brake wire to caliper body 1. Then adjust the brake properly.

3-2-4. Adjustments

(1) Brake adjustment

Brake pad wear and adjustment should be checked every 20 hours operation by operating the brake lever.

To adjust the brake, insert a feeler gauge 0.0059 in. (0.15 mm.) between the lining pad complete (1) and the disc brake (2), and screw in the screw (3) so it contacts the back-up plate (4). Then lock the screw (3) with the nut (5) after the adjustment, and remove the feeler gauge.

By turning the adjusting bolt (8) on the brake wire, adjust the play of the brake wire (6) at the brake lever end to 0.21 in. (5 mm.) after the adjustment, and tighten the lock nut (7).

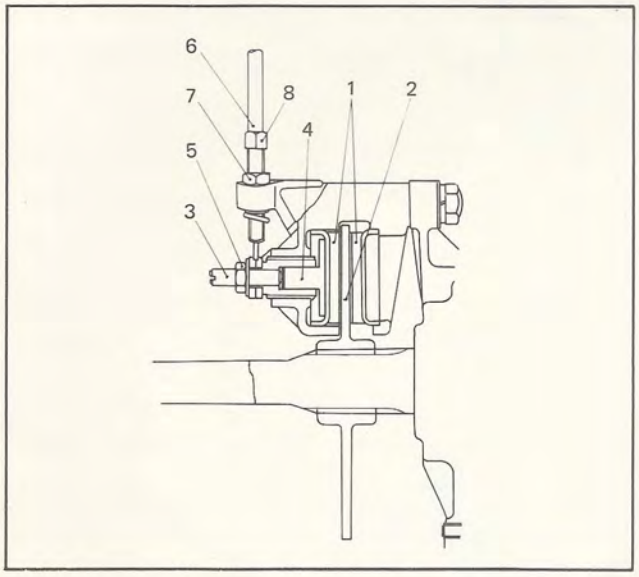

1. Lining pad complete
2. Disc brake
3. Back screw
4. Back-up plate
5. Nut
6. Brake wire
7. Lock nut
8. Adjusting bolt

Fig. 3-20

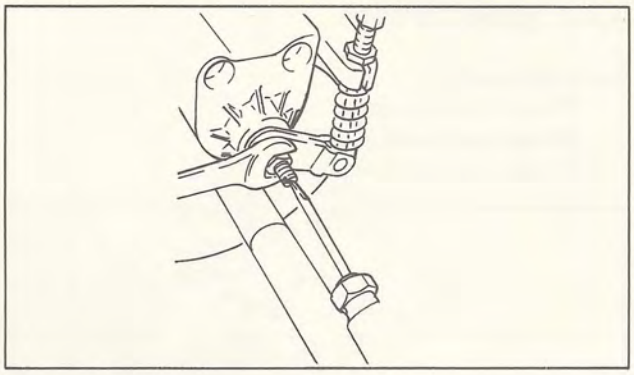

Fig. 3-21

Replace any broken gasket. Next, secure the housing cap with eight bolts, and tighten the track adjusting screw. Next, secure the caliper body assembly to the chain housing with two bolts. For adjustment, refer to "Disc Brake."

Oil once or more per season. Use SAE 10W/30 motor oil MS detergent.

Quantity of oil: 320 cc

Install the oil plug cap, breather pipe and exhaust pipe assembly.

3-3. Chain Housing

Tools Required:

- 21-mm. socket wrench
- 13-mm. open-end wrench
- 17-mm. open-end wrench
- Slotted-head screwdriver (medium)
- Long-nose pliers
- Phillips-head screwdriver (medium)
- Pliers

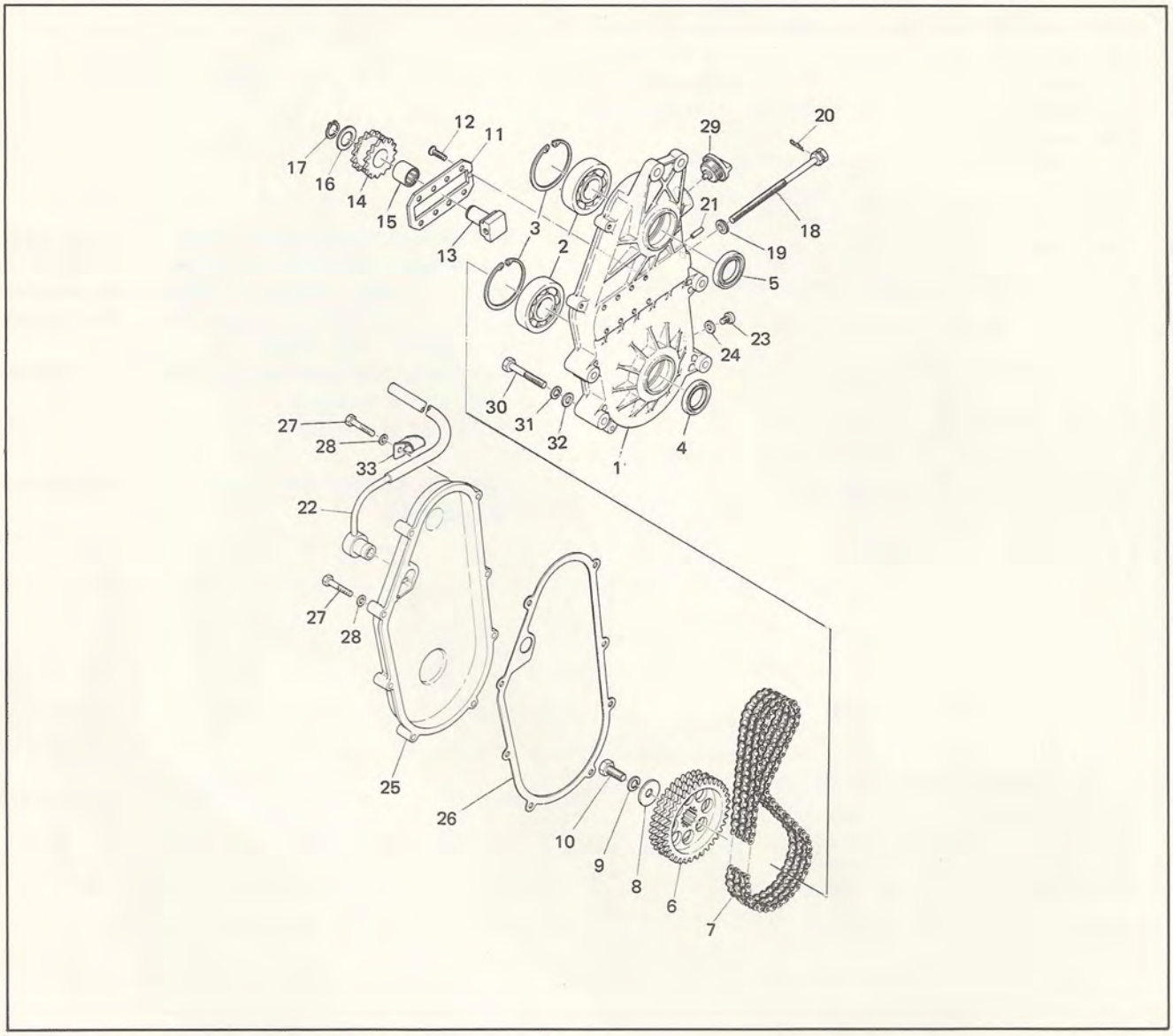

1. Chain housing
2. Bearing
3. Circlip
4. Oil seal
5. Oil seal
6. Chain driven sprocket
7. Chain
8. Washer
9. Spring washer
10. Bolt
11. Holder
12. Flat head screw
13. Tensioner
14. Wheel
15. Bearing
16. Washer
17. Circlip
18. Bolt
19. Washer
20. Clip
21. Spring pin
22. Breather
23. Pan head screw
24. Screw gasket
25. Housing cap
26. Gasket
27. Bolt
28. Plain washer
29. Cap 2
30. Bolt
31. Spring washer
32. Plain washer
33. Wire clip

Fig. 3-22

3-3-1. Removal

(1) To remove the chain housing, remove the two bolts from the exhaust pipe assembly, and remove the caliper body assembly. Remove the starter handle from the starter handle holder. Remove the oil plug and breather pipe.

(2) Remove the chain housing from the frame.

1) To remove, first remove the eight bolts from the housing cap. (Oil will flow out, so an oil pan should be on hand.)
Remove the housing cap. (Fig. 3-23)

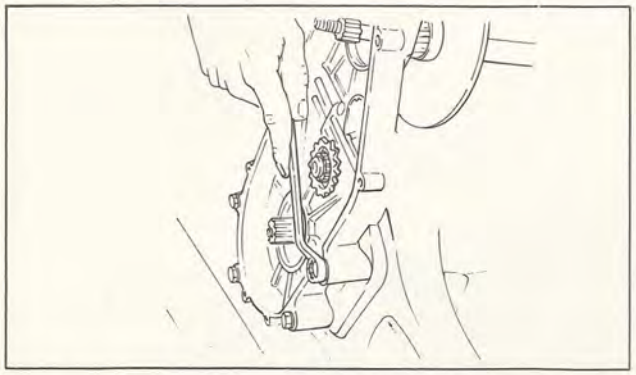

Fig. 3-23

2) Remove the nut and cotter pin holding the chain drive sprocket, using the 22-mm. open-end wrench.

3) Using the 17-mm. open-end wrench, remove the bolt holding the chain driven sprocket.

4) To loosen the chain, remove the clip.
Loosen the chain adjusting screw, and the chain drive sprocket and chain driven sprocket can be removed together. (Fig. 3-24)

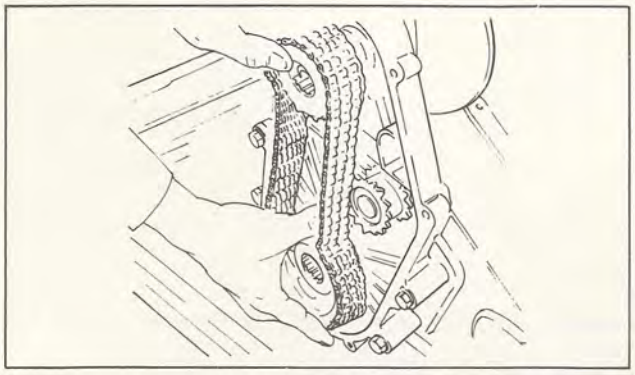

Fig. 3-24

5) Loosen the track adjusting screw so the front axle becomes loose. Remove the four bolts mounting the chain housing, and remove the chain housing. (Fig. 3-25,3-26)

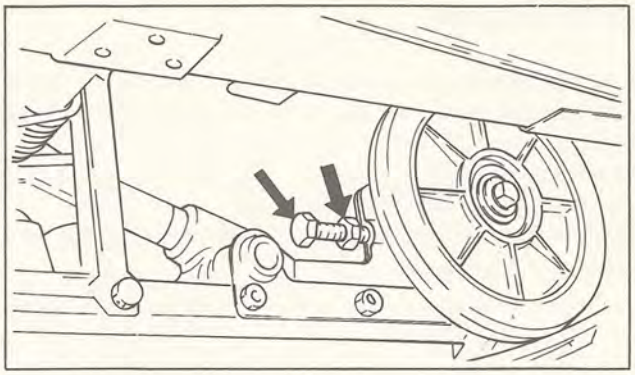

Fig. 3-25

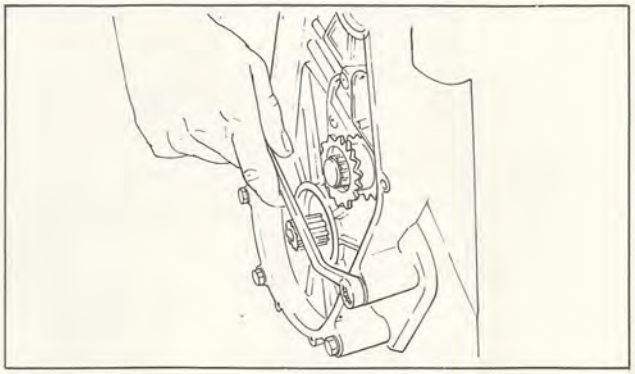

Fig. 3-26

3-3-2. Cleaning and Inspection

(1) Cleaning

1) Wash the oil seal in a denatured alcohol solution. Never use a mineral oil.

2) As for the other parts, clean them in solvent, and blow with compressed air.

(2) Inspection

1) Check the chain housing, and if cracked or broken, replace.

2) Check the housing cap, and if cracked, replace.

3) Check the drive chain for wear or binding action. To check, it must be washed. If it is too stiff to bend because of rust, replace the chain.

4) Check the drive sprocket and driven sprocket for wear on teeth and splines. If worn excessively, replace.

5) Wash the bearing, and check for play and noise. If excessive play or noise is evident, replace.

6) Check the oil seal for wear on contact surfaces, damage and deformation. Replace as required.

7) Check the chain for condition before each race.

3-3-3. Assembly

Coat the bearing on the drive sprocket side of the chain housing and the holder (for chain adjustment) with Shell Alvania grease #2 or #3).
Then install the chain housing. (Do not forget to install the collar on the drive sprocket side)
Next, install the driven sprocket and drive sprocket and chain at the same time.

Tightening torque:

Drive sprocket	0.7 — 0.8 ft-lbs. (5.0 — 6.0 m-kgs.)
Driven sprocket	0.6 — 0.7 ft-lbs. (4.5 — 5.5 m-kgs.)

Adjust the chain.
By screwing the bolt (A) in or out, adjust the deflection of the chain to 0.4 in. (10 mm.) as illustrated in Figs. 3-27,3-28.

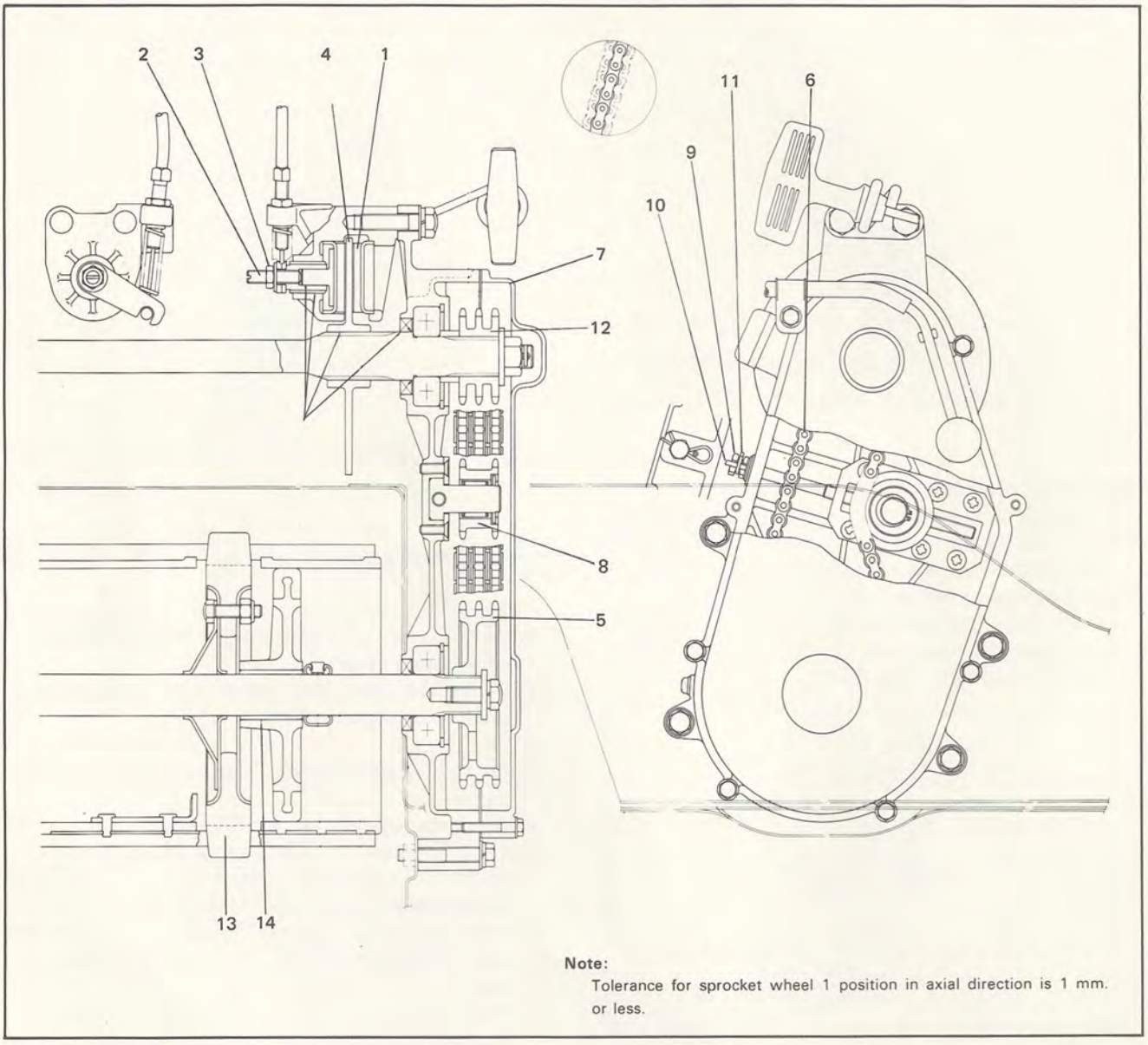

Note:
Tolerance for sprocket wheel 1 position in axial direction is 1 mm. or less.

1. Paddler pleat
2. Screw
3. Nut
4. Disk brake
5. Chain driven sprocket
6. Chain
7. Cap housing
8. Bolt
9. Bolt
10. Spring pin
11. Clip
12. Chain drive sprocket
13. Sprocket wheel 1
14. Guide wheel complete

Fig. 3-27

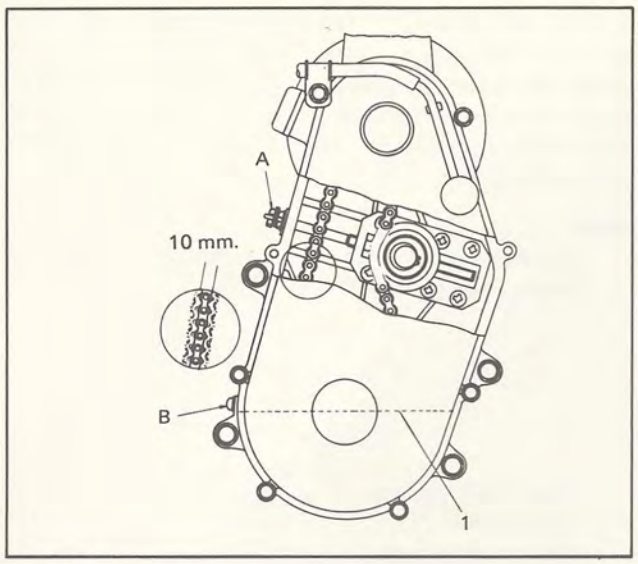

1. Oil level

Fig. 3-28

3-4. Front Axle

Tools Required:

- Socket-end wrench (29-mm.)
- 14-mm. open-end wrench
- 13-mm. open-end wrench
- 10-mm. open-end wrench
- Punch
- Steel-head hammer
- Chisel

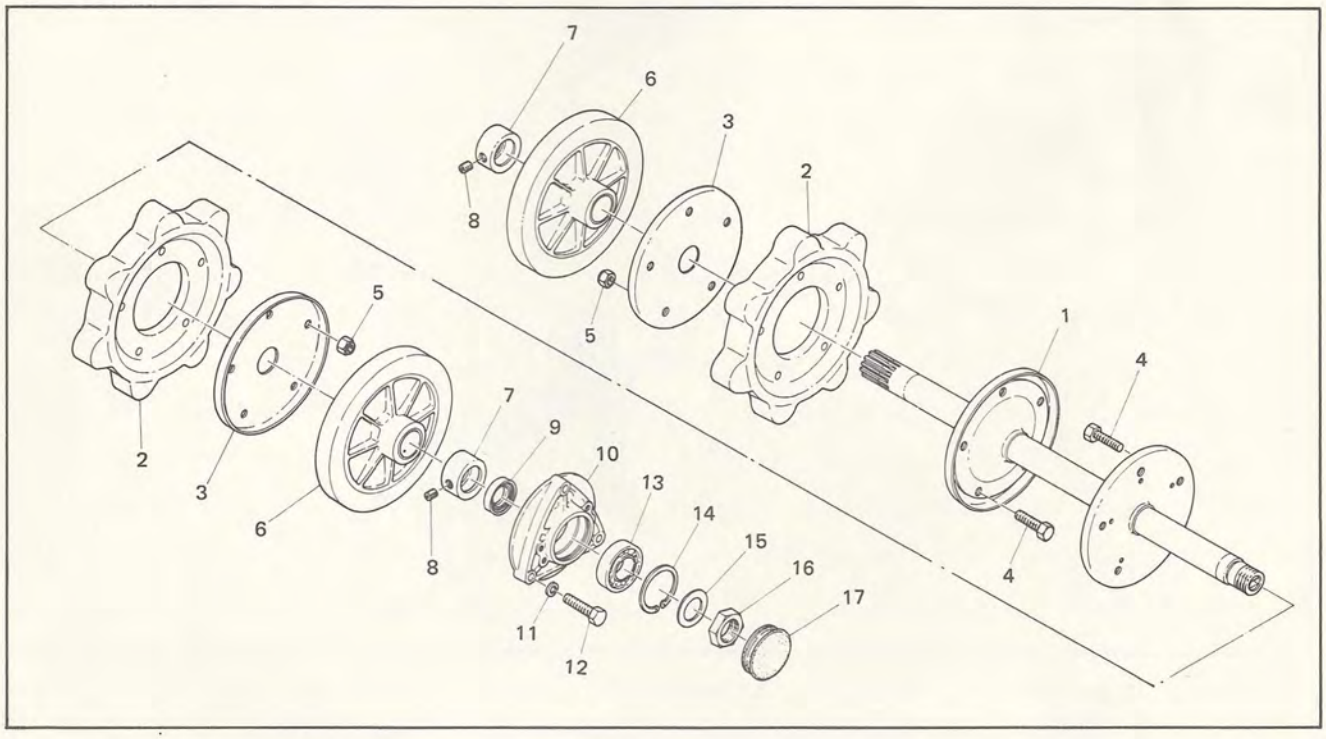

1. Front axle complete
2. Sprocket wheel 1
3. Sprocket wheel rim 2
4. Bolt
5. Nut
6. Guide wheel complete
7. Collar
8. Screw
9. Oil seal
10. Front axle housing
11. Spring washer
12. Bolt
13. Bearing
14. Circlip
15. Washer
16. Nut
17. Cap

Fig. 3-29

This section discusses the differences on the front axle between the GPX338F/GPX433F and GP338F/GP433F. For other details, refer to the GP338F/GP433F Service Manual and Fig. 3-32.

Whenever the front axle, chain housing and drive track parts have to be disassembled, the track adjusting screw should be loosened for easy operations. To adjust the track adjusting screw after assembling, refer to Fig. 3-32.

To remove sprocket wheel 1 after removing the front axle assembly, the parts (1) to (8) in Fig. 3-29 must be removed. The removal should be started with the screw (8) and the collar (7). The removal sequence for other parts are the same as other models.

Screw (8) tightening torque: 7.95 ft-lbs. (1.1 m-kgs.)

Apply Shell Alvania grease #2 or #3 to the contact surface of the guide wheel with the front axle, oil seal (9) and bearing (13).

Note:

Retighten bolts and nuts and grease moving parts before each race.

3-5. Rear Axle

Tools Required:

- 13-mm. socket wrench
- 13-mm. open-end wrench
- Punch
- Steel-head hammer
- Circlip pliers
- Soft-faced hammer
- Pliers

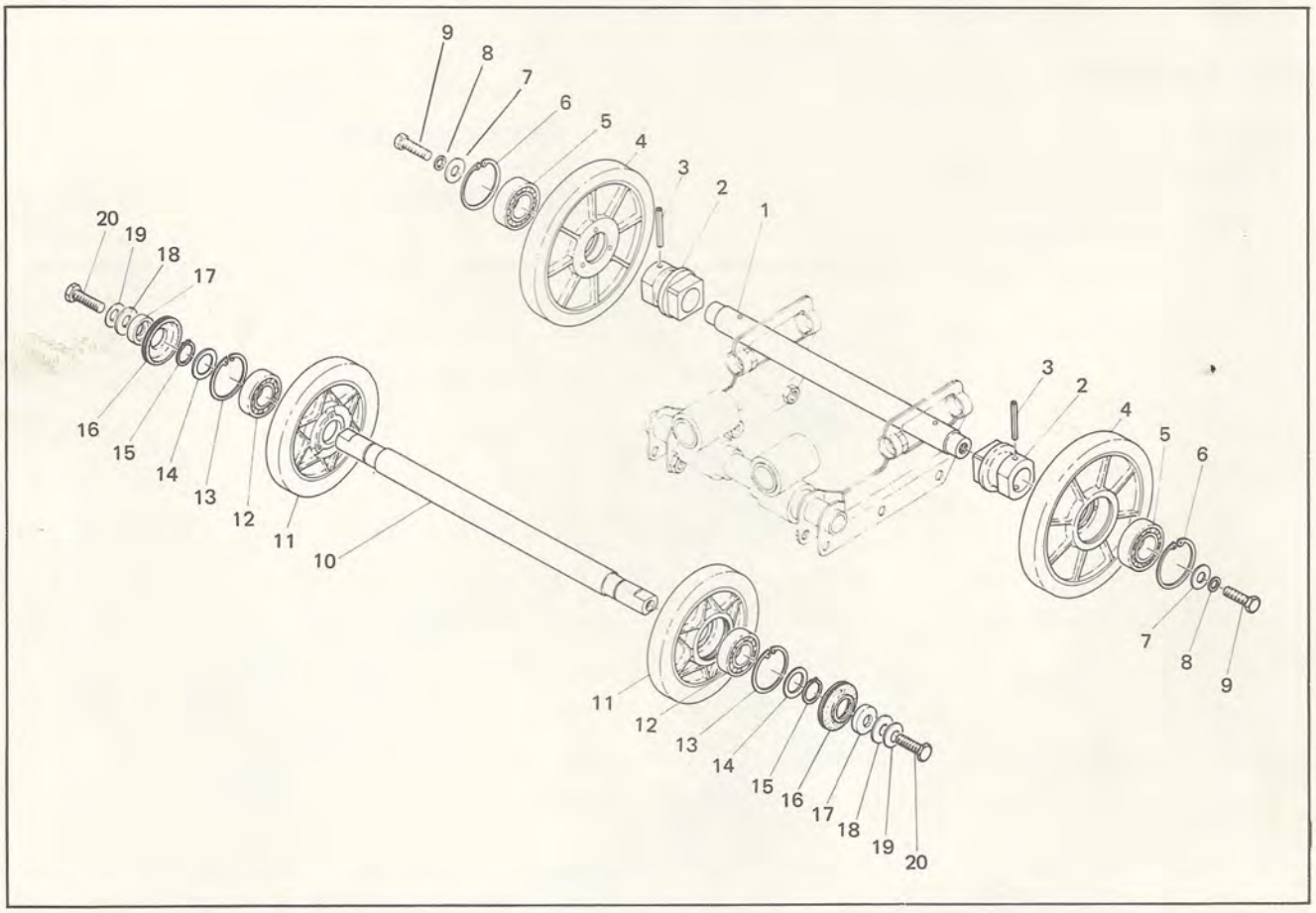

1. Rear axle
2. Collar 3
3. Spring pin
4. Guide wheel 2
5. Bearing (B6204 2RS)
6. Circlip (R-27)
7. Washer
8. Spring washer
9. Bolt
10. Shaft 3
11. Suspension wheel
12. Bearing (B6004 2RS special)
13. Circlip (R-42)
14. Washer
15. Circlip (S-20)
16. Wheel cap
17. Spacer
18. Washer
19. Bellevile spring
20. Bolt

Fig. 3-30

For details of disassembly, assembly and other procedure, refer to the GP33F/GP433F Service Manual and Fig. 3-32.
As required, retighten bolts and nuts before each race.
Refer to the Torque Chart.

3-6. Sliding Suspension

Tools Required:

- 14-mm. open-end wrench
- 13-mm. socket wrench
- Chisel
- Steel-head hammer
- Soft-faced hammer
- Phillips-head screwdriver (medium and large)
- Pliers
- 17 — 19 mm. open-end wrench

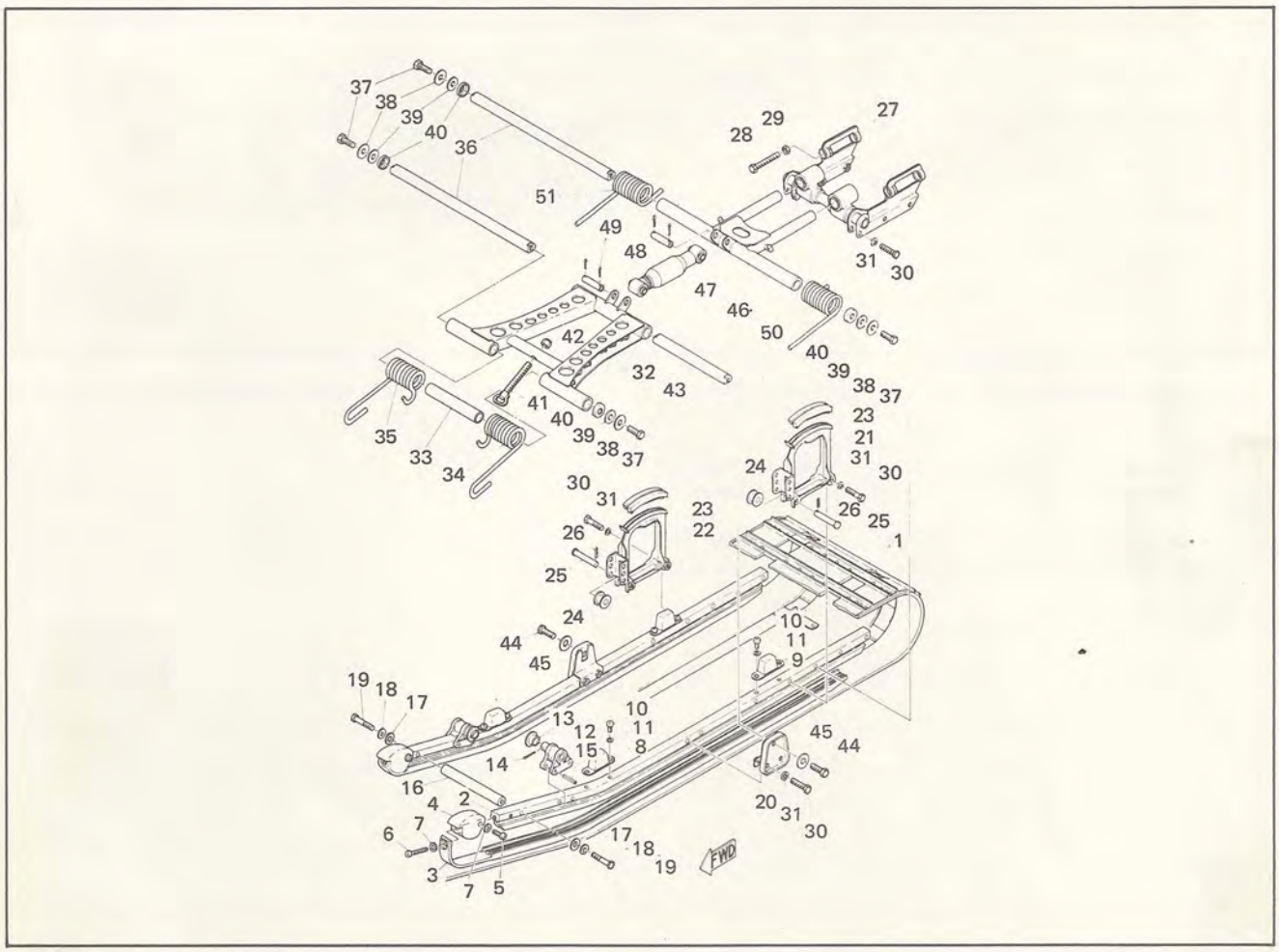

1.	Track ass'y	14.	Cotter pin	27.	Rear bracket 1	40.	Spacer
2.	Sliding frame 1	15.	Spring pin	28.	Bolt	41.	Hook 2
3.	Sliding runner 1	16.	Shaft 1	29.	Nut	42.	Nut
4.	Sliding runner 3	17.	Washer	30.	Bolt	43.	Shaft 2
5.	Pan head screw	18.	Bellevile spring	31.	Spring washer	44.	Bolt
6.	Pan head screw	19.	Bolt	32.	Pivot arm 1	45.	Washer 1
7.	Plain washer	20.	Bracket 1	33.	Tube	46.	Pivot arm 2
8.	Damper 1	21.	Stopper 1	34.	Torsion spring 1	47.	Shock absorber
9.	Damper 2	22.	Stopper 2	35.	Torsion spring 2	48.	Pin 1
10.	Pan head screw	23.	Sliding runner 2	36.	Pivot shaft	49.	Cotter pin
11.	Spring washer	24.	Roller 2	37.	Bolt	50.	Torsion spring 3
12.	Hook 1	25.	Pin with hole	38.	Washer 1	51.	Torsion spring 4
13.	Roller 1	26.	Clip	39.	Washer		

Fig. 3-31

For details, refer to the GP338F/GP433F Service Manual and Fig. 3-32.
Retighten bolts and nuts before each race.

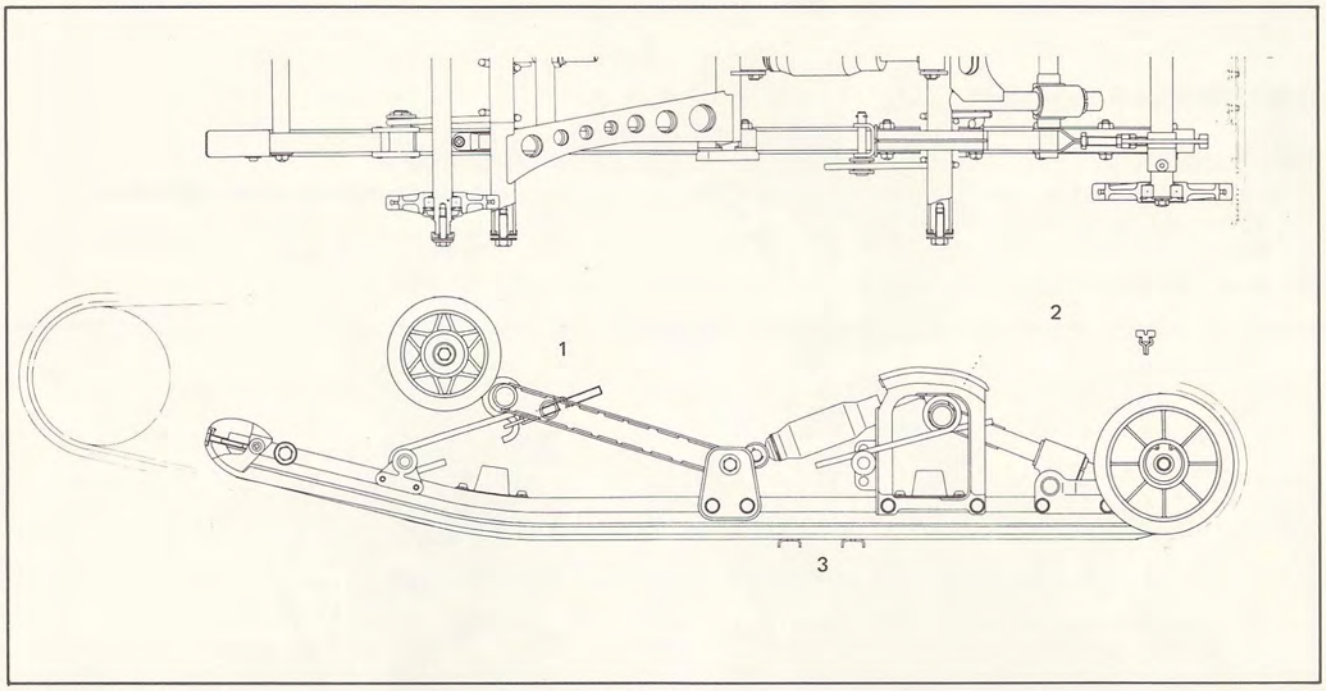

1. Amount of tightening of track tension adjusting bolt: 1.8 ins. (45 mm.)

2. After installed, sliding runner 2 should be clinched 1.38 ins. (35 mm.) from the end.

3. Track tension should be so adjusted that when the track is pulled at its center by a force of 2.35 lbs. (10 kgs.) the total deflection is 0.69 in. (17.5 mm.).
   Hook up a spring balance to a cleat at the center of the track. The amount of deflection should be the same on both sides of the track.

Fig. 3-32

CHAPTER 4. STEERING (SKI) AND CHASSIS

Note:

This section deals with general maintenance of the machine.

Inspections should be carefully done before each race. Except for racing, the machine should be checked every 80 hours of operation.

If the machine is new, bolts and nuts should be re-tightened as instructed separately.

For tightening torque, refer to the torque chart.

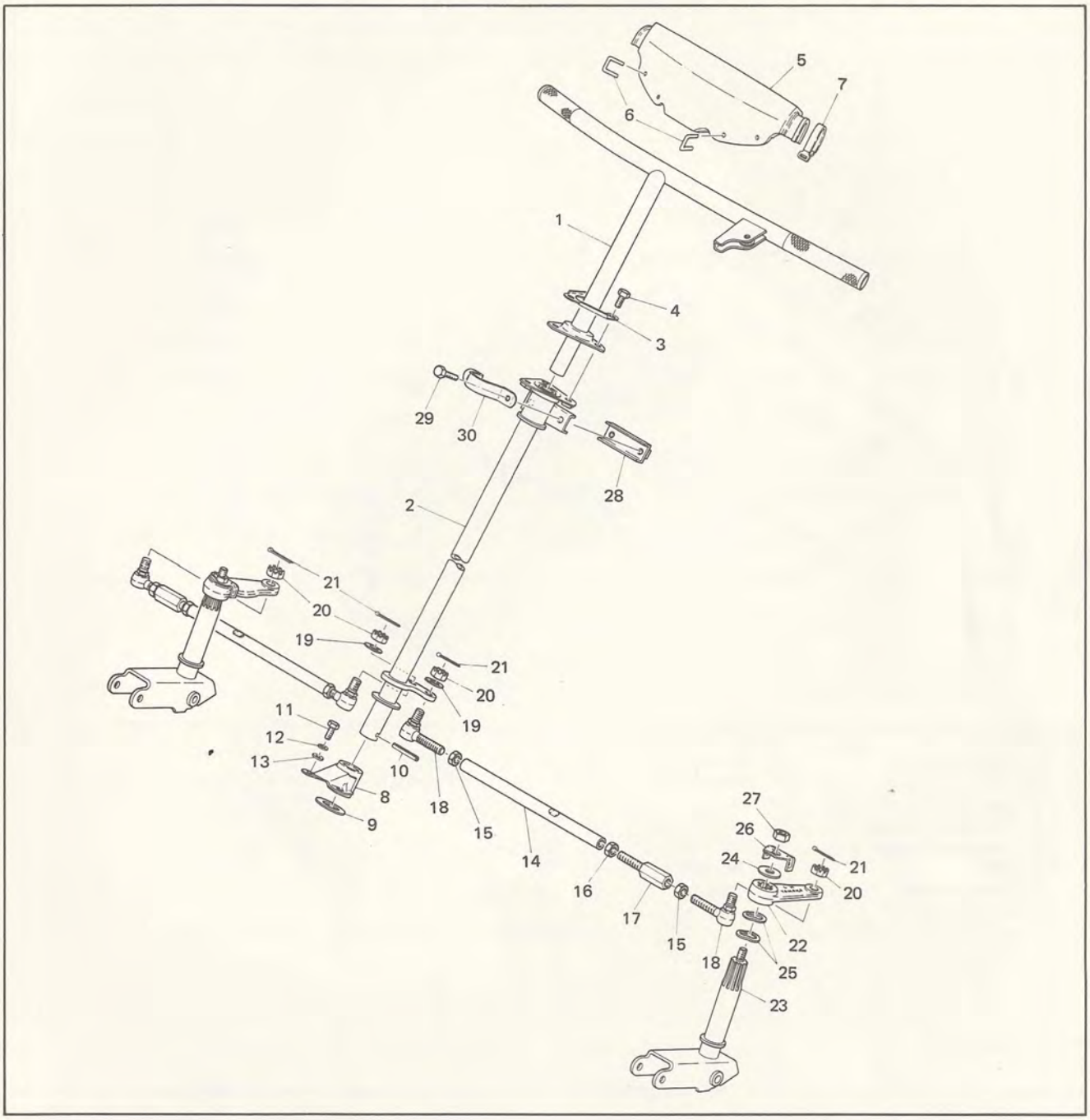

1. Steering column 1
2. Steering column 2
3. Lock washer
4. Bolt
5. Steering pad
6. Clamp
7. Band
8. Steering lower bracket
9. Steering bearing 1
10. Spring pin
11. Bolt
12. Spring washer
13. Plain washer
14. Steering relay rod
15. Nut 1
16. Nut 2
17. Joint
18. Universal joint
19. Plain washer
20. Slotted nut
21. Cotter pin
22. Outside arm
23. Ski column
24. Plate washer
25. Wave washer
26. Lock washer
27. Nut
28. Bearing holder
29. Bolt
30. Lock washer

Fig. 4-1

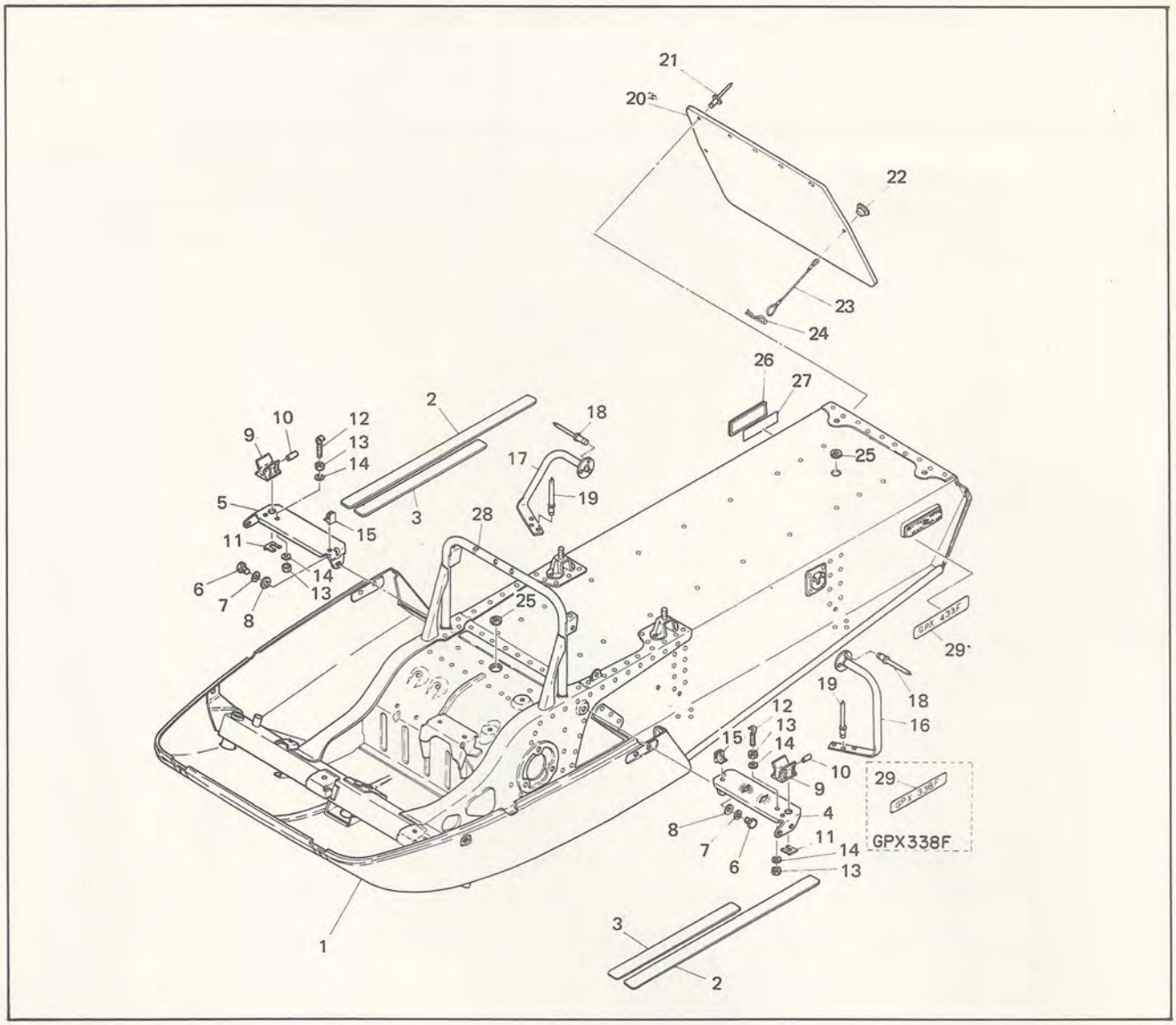

1. Frame complete
2. Foot rest cover 1
3. Foot rest cover 2
4. Bumper end bracket 1
5. Bumper end bracket 2
6. Bolt
7. Spring washer
8. Plain washer
9. Clamp 3
10. Stopper
11. Clip
12. Latch body 1
13. Nut
14. Plain washer
15. Clamp
16. Footrest reinforcement 1
17. Footrest reinforcement 2
18. Blind rivet
19. Flap
21. Blind rivet
22. Plug
23. Flap stopper
24. Clip
25. Instrument panel ornament 2
26. Reflector
27. Reflector tape
28. Band
29. Emblem 4

Fi.g 4-2

4-1. Frame

(1) Check the front bumper screws, and retighten as required. The front bumper also serves as a reinforcement of the frame. If front bumper mounting screws are loose, the frame may be cracked.

(2) Check the secondary shaft bearing housing bolts. The bearing housing is constantly under the pressure from the V-belt. If the bearing housing is loose, the frame may be caracked. Retighten the bearing housing bolts as required. (Fig. 4-3)

Retighten the bolts after 50 miles (2-hour) ride, 250 miles (10-hour) ride, 500 miles (20-hour) ride, then every 250 miles (10-hour) ride.

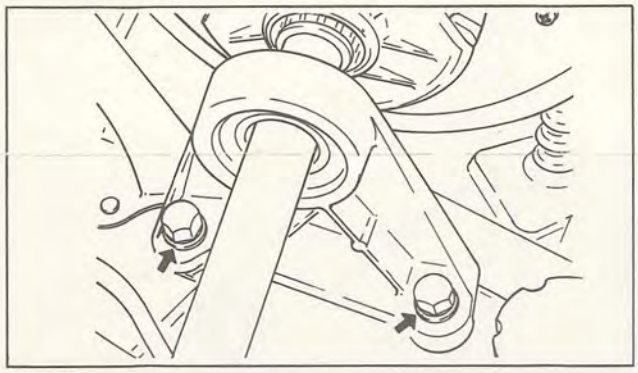

Fig. 4-3

(3) Check the rivets securing the main frame and sub-frame. If a loose rivet is found, it should be replaced as early as possible. If not, the frame may be cracked. (Fig. 4-47)

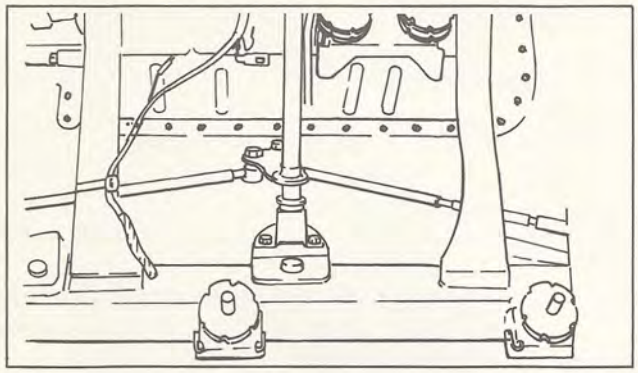

Fig. 4-4

(4) Check the frame protector.
To protect the frame against damage by the drive track, the protector is attached to the bottom of the frame.
Particularly when spikes are installed, check the protector for wear. If worn excessively, replace.

(5) To mount the rear bumper, be sure to install two washers 1 and 2. If not, the frame may be bent when the rear bumper is raised. (Fig. 4-5)

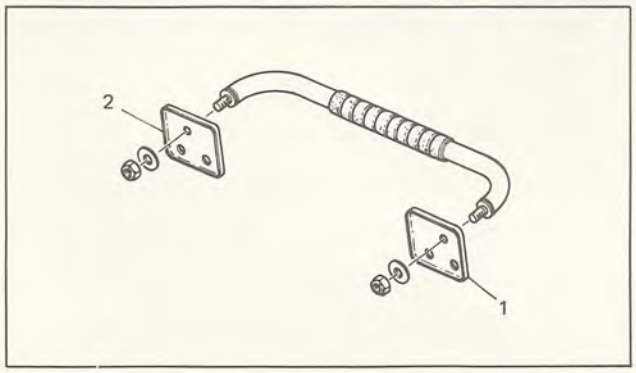

1. Washer 1
2. Washer 2

Fig. 4-5

(6) Be sure to install the foot rest.
If the machine is used without the foot rest for a long time frame step tends to bend down. (Fig. 4-6)

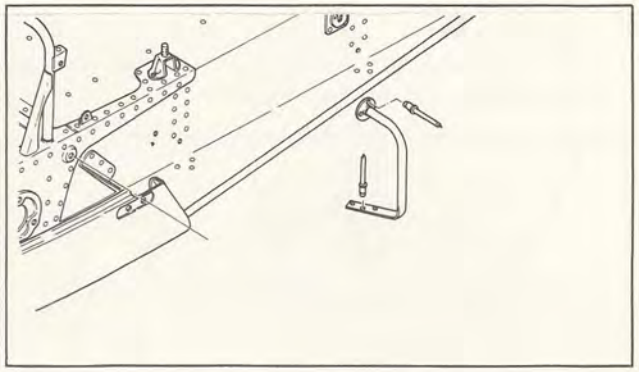

Fig. 4-6

(7) Check the suspension bolts (six), and if loose, retighten. If bolts are loose, the frame may be cracked by road shocks. (Fig. 4-7)

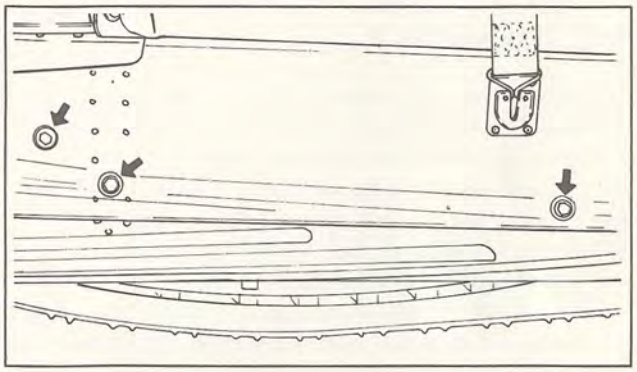

Fig. 4-7

(8) Check the muffler protector for looseness. If loose, retighten. Otherwise, exhaust leakage, noise or frame cracking may result. (Fig. 4-8)

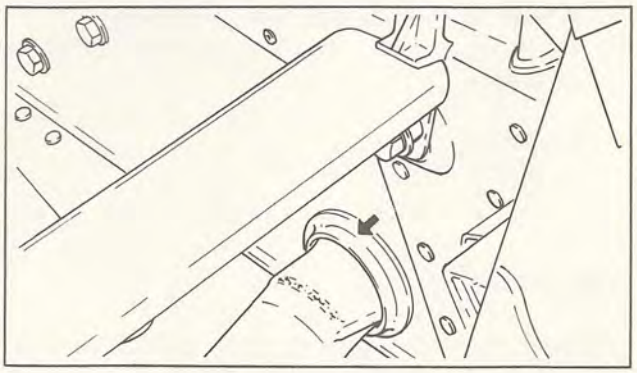

Fig. 4-8

4-2. Engine Mount

(1) Check the engine mount damper for separation.
If the engine mount damper shows separation or cracks, replace.
The movement of the V-belt gives a great strain to the engine mount damper, and therefore, it should be checked periodically. (Fig. 4-9)

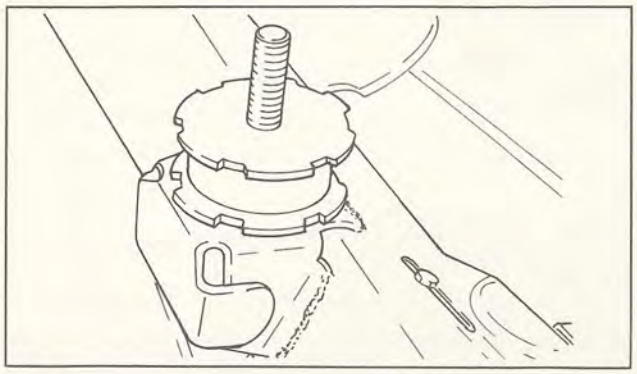

Fig. 4-9

4-3. Oil and Fuel

(1) Check clips retaining pipes for missing.
(2) Check to see if pipes contact the secondary shaft.
Refer to piping and wiring diagrams.
(3) Check pipes for kinks, breaks and leaks.
(4) Check pipes for flattening caused by tank.
(5) Check the breather pipe for correct routing.
Check clamps for looseness.
The breather pipe should be so routed that no fuel leakage will result from the severe vibration, shocks and/or banking of the vehicle.
For routing, refer to piping and wiring diagrams.

4-4. Ski

(1) Check the ski runner mounting bolts for looseness.
A loose ski runner could cause hard steering.
(2) For racing purposes, the following parts are offered as options.

a. Carbide runner
b. Shock absorber
c. Spring assembly

4-5. Steering

(1) Avoid turning the steering handle more than specified. If it is turned excessively, the outside arm contacts the stopper attached to the frame reinforcement rib. Take care particulary when the machine is stopped or runs at low speeds. (Fig. 4-10)

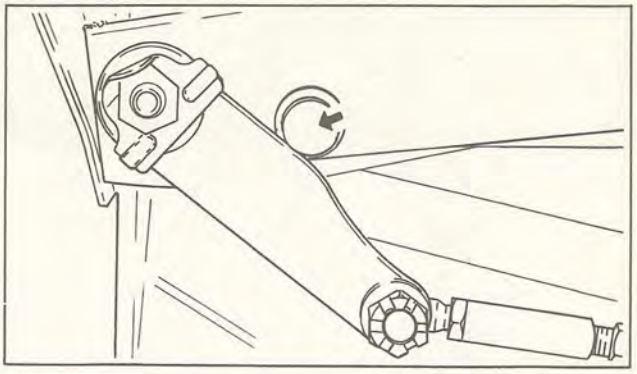

Fig. 4-11

(2) Check lock washers.
Bolts and nuts tend to come loose because of vibration.
Check whether or not lock washers are bent over bolt heads or nuts.

4-6. Control Wires

(1) Check all control wires for correct routing.
Refer to wiring and piping diagrams.
(2) Check bands for looseness.
(3) Check whether or not the carburetor butterfly valve can be fully opened.
Since the throttle wire tends to stretch when the machine is new, adjust after two or three weeks from the date of purchase.

4-7. Shroud

(1) Opening and closing
The shroud should be opened slowly so that no shocks are given to the shroud stopper.
When closing, take care so that the throttle wire is not pinched between the instrument panel and the shroud.
(2) Set the shroud stopper spring on the right hinge so it does not contact the clutch (primary sheave or V-belt).
Refer to the GPX338F/GPX433F Assembling Manual.

CHAPTER 5. ELECTRICAL SYSTEM

In the GPX338F/433F, the capacitor discharge ignition system is used.

A capacitor discharge ignition (C.D.I.) system eliminates the need for a mechanical contact breaker and its inherent disadvantages. A simple electronic circuit using a large storage capacitor and a thyristor (Silicon Controlled Rectifier) provides a correctly-timed, high intensity voltage to the spark plug.
The C.D.I. system has many advantages. There is no contact breaker to wear out, become misaligned, or lose its efficiency because of pitted points, increased gap, or contamination. There is no mechanical adjustment required for the contact gap because there are no electrical contacts (points). Only a screwdriver and dial gauge are required to set the timing. There is no mechanical spark advance system to maintain, either.
An electronic circuit automatically provides the correct spark advance at all engine speeds.
Finally, the C.D.I. system provides a stronger, quicker primary current pulse.
This improves ignition performance, particularly at higher r.p.m.'s. Additionally, the stronger pulse inhibits misfire due to oil fouling and bridging.

The following diagrams show a comparison of ignition performance between the contact breaker system and the C.D.I. system.

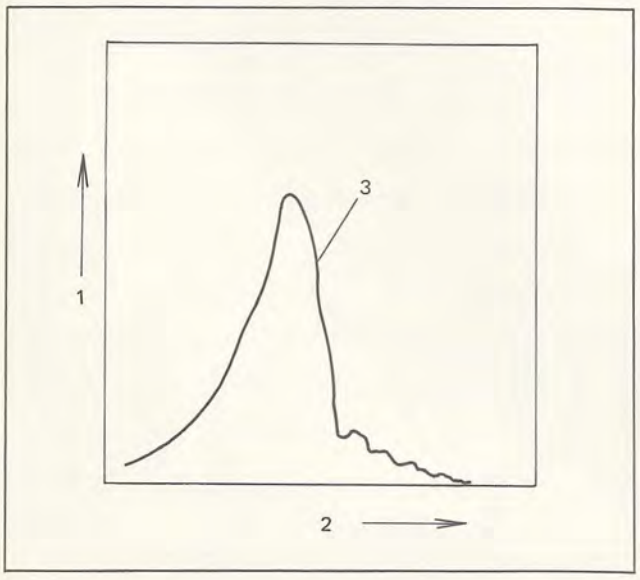

1. Voltage
2. Milliseconds
3. Ignition voltage curve

Fig. 5-1

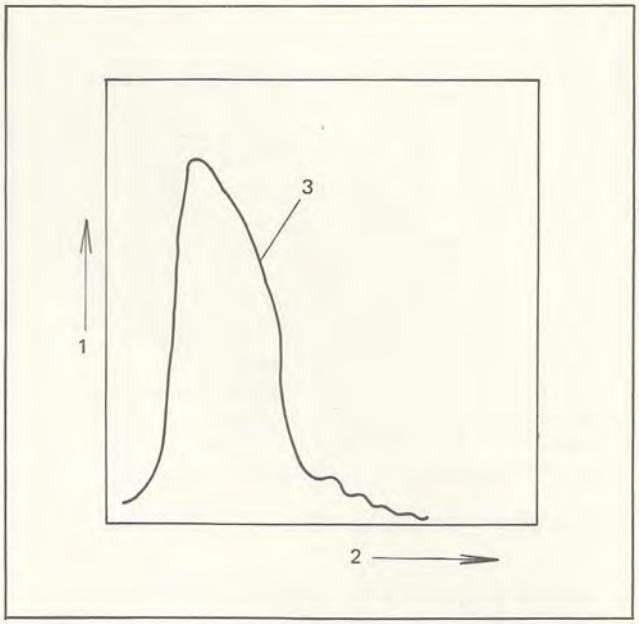

1. Voltage
2. Milliseconds
3. Ignition voltage curve

Fig. 5-2

(1) C.D.I. systems and its function
The principal parts of the Yamaha C.D.I. System and their primary function(s) are as follows:

1) Magneto — The Yamaha C.D.I. magneto is mounted on the crankshaft and incorporates a charging coil for the ignition capacitor and a pulser coil to generate a trigger pulse for ignition timing.
2) C.D.I. Unit — The "black box" of the system. This solid state, encapsulated unit contains the electronic control circuitry, including the ignition capacitor, silicon controlled rectifier (S.C.R.), charging current rectifiers, and automatic spark advance circuit components.
3) Ignition Coil — A "step-up" transformer which increases the voltage from the ignition capacitor to the high voltage is used to "fire" the spark plug.

(2) Description of operation

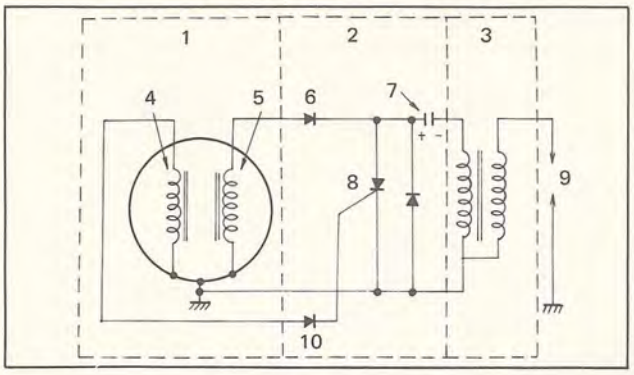

1. Magneto
2. C.D.I. unit
3. Ignition coil
4. Pulse coil
5. Charge coil
6. Diode
7. Ignition capacitor
8. Thyristor
9. Spark plug
10. Diode

Fig. 5-3 C.D.I. Schematic

As the magneto turns it induces an alternating current (A.C.) in the charge coil. This A.C. current is rectified to a direct current (D.C.) by the diode in the C.D.I. unit and charges the Ignition Capacitor to approximately 350 volts.

The thyristor (Silicon Control Rectifier) prevents the discharge of the ignition capacitor until it receives a positive trigger pulse from the Pulse Coil. (Fig. 5-4).

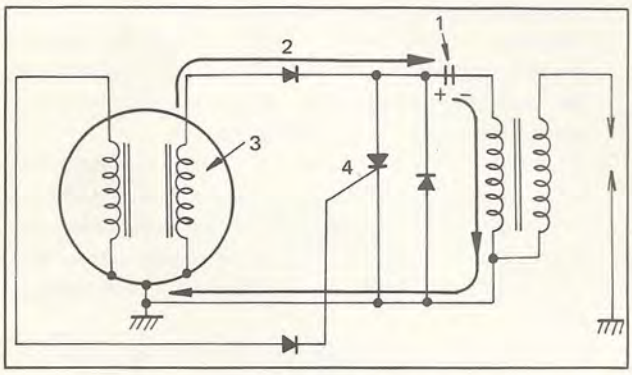

1. Ignition capacitor
2. Diode
3. Charge coil
4. Thyristor

Fig. 5-4 Ignition Capacitor Charging

When the mark on the rotor aligns with the mark on the pulse coil (see Figure 5-5), a trigger pulse is sent to the thyristor gate. This pulse allows the thyristor to conduct and the current stored in the ignition capacitor will quickly flow through the primary winding of the ignition coil. This induces a high voltage in the ignition coil secondary winding which causes a spark to jump across the electrodes of the spark plug.

Automatic Spark Advance System. The output voltage of the pulse coil will increase as engine speed increases.

This causes the thyristor to conduct earlier, resulting in an advanced spark.

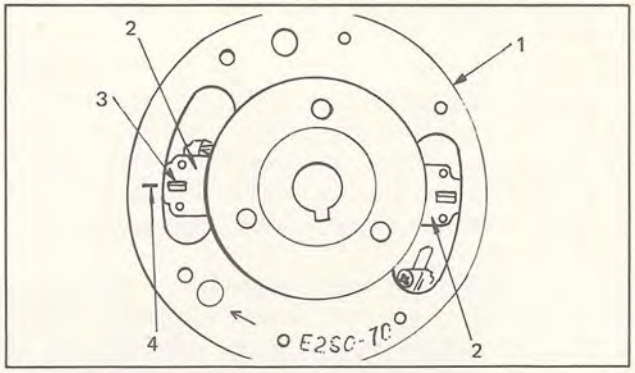

1. Rotor
2. Pulser
3. Alignment mark
4. Timing mark

Fig. 5-5

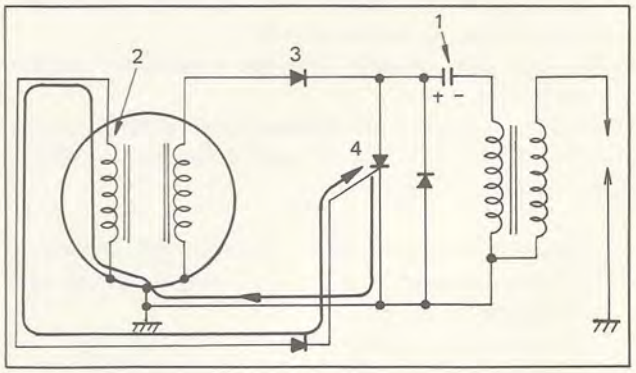

1. Ignition capacitor
2. Pulse coil
3. Diode
4. Thyristor

Fig. 5-6

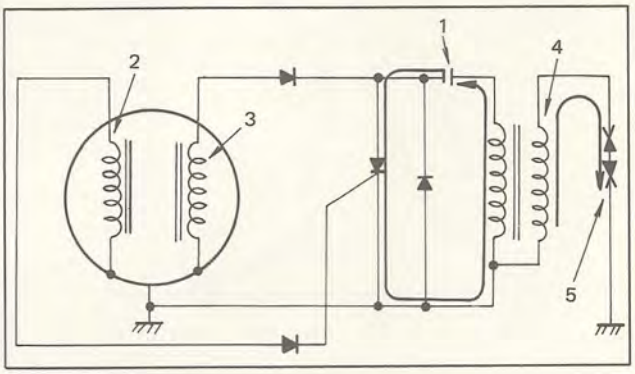

1. Ignition capacitor
2. Pulse coil
3. Charge coil
4. Ignition coil
5. Spark plug

Fig. 5-7 Ignition Capacitor Discharges and Spark Plug Fires

(3) C.D.I. wiring connections

The wiring between the magneto, C.D.I. unit and ignition coil uses couplers to prevent any wrong connection. But when connecting the ground circuit and the ignition coil, particular care should be taken. If these are connected wrong, the C.D.I. unit will become inoperative.

1) Wiring notes

a) Connection must be done accurately.
Special care is required for connection of the ground circuit and ignition coil.

b) The C.D.I. unit and ignition coil should be installed in the specified positions. If position is to be changed, a dry and airy place should be selected.
Keep free from mud and water.

c) To remove the rotor, be sure to use the rotor puller (an accessary tool). Avoid using a hammer, or the rotor may be damaged.

d) Handle the C.D.I. unit with special care. If you should drop it, the incorporated electronic components will be damaged.

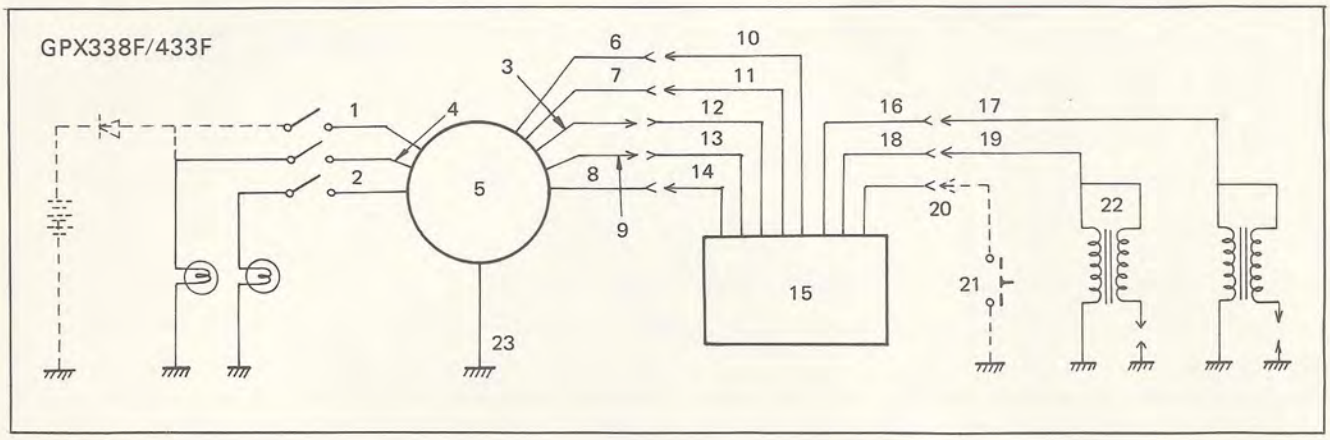

1. Yellow
2. Green
3. White/red
4. Red/white
5. Magneto F280-51
6. Brown
7. Blue
8. Black
9. White/black
10. Brown
11. Blue
12. White/red
13. White/black
14. Black
15. C.D.I. unit TIA02-03
16. Grey
17. Black
18. Orange
19. Black
20. Black/white
21. Stop button
22. Ignition coil (CM61-20B) (CM61-20L)
23. Black

Fig. 5-8

(4) Checking the magneto and ignition coil
Avoid using an improper tester (insulation resistance testers or other testers with a battery of large capacity)

The use of alarge capacity tester may ruin the C.D.I. unit as specified below.
To locate the cause of trouble (broken coil, short-circuit, etc.) measure the resistance of each winding.

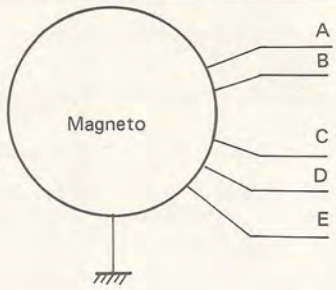

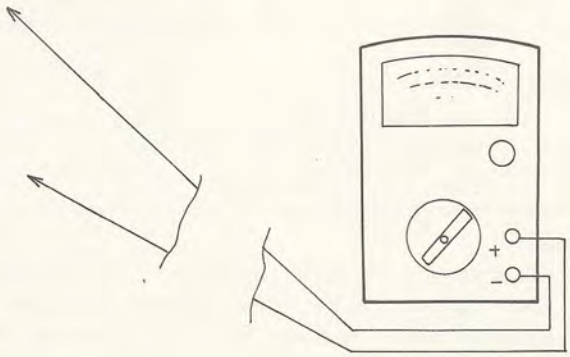

Model	External rotation F280-51		
Parts to be mesured	Charging coil	Pulser	
Lead wires	Brown (B) Blue (E)	White/red (D) Black (A)	White/black (C) Black (A)
Resistance (Ω)	190	85	

Fig. 5-9

(5) Checking the Ignition Coil

Model	CM61-20	
Parts to be measured	Primary winding	Secondary winding
Resistance (--)	0.61 --10%	6,000 --20%

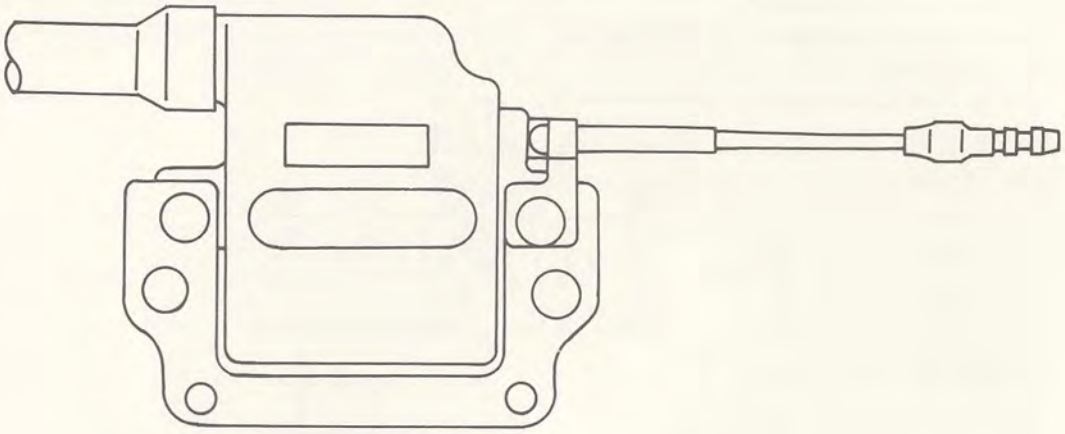

Fig. 5-10

(6) Checking the C.D.I. unit

The following are the conditions of the C.D.I. unit which can be used to check electronic parts and connectors by applying the Yamaha pocket tester to couplers.

Tester + / Tester −		Stop	Ground	Charging coil		Pulser		Ignition	
		Black/white	Black	Brown	Blue	White/red	White/black	Grey	Orange
Stop	Black/white		—	—	—	—	—	—	—
Ground	Black	1.5		7	7	—	—	400 – ∞	400 – ∞
Charging coil	Brown	7	170		200	—	—	400 – ∞	400 – ∞
	Blue	7	170	200		—	—	400 – ∞	400 – ∞
Pulser	White/red	150	80	100	100		—	400 – ∞	400 – ∞
	White/black	150	80	100	100	—		400 – ∞	400 – ∞
Ignition	Grey	700 – 1,000	1,000 – 2,000	1,000 – 2,000	1,000 – 2,000	—	—		2,000 – ∞
	Orange	700 – 1,000	1,000 – 2,000	1,000 – 2,000	1,000 – 2,000	—	—	2,000 – ∞	

Notes:

1. The figures in the above chart show tester readings when the tester is set in the range of Ω x1000. If measured with the tester set in other ranges, the figures will be different because of diodes built in the C.D.I. unit.
2. When making tests using the orange terminal, the condenser should be discharged by contacting the orange lead with the black/white lead.

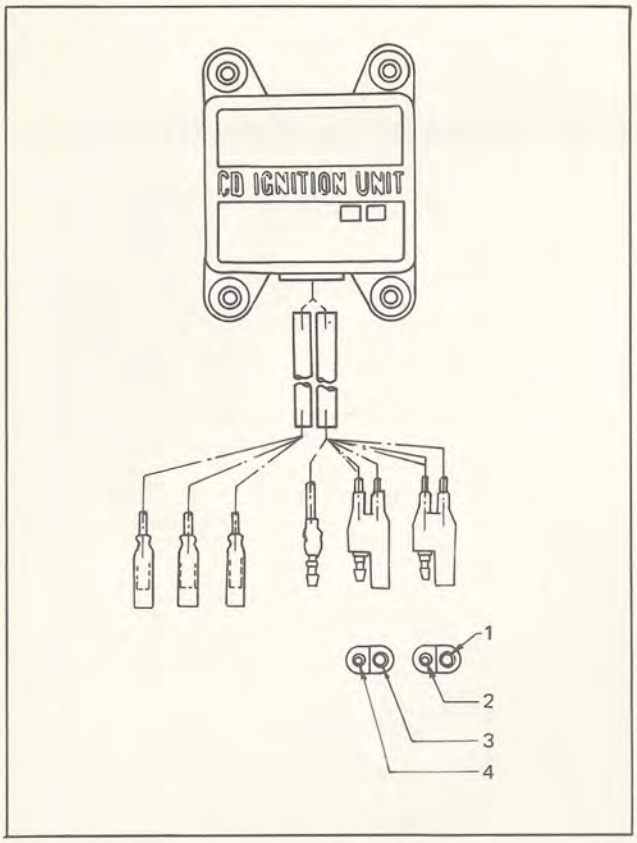

1. White/red
2. Brown
3. White/black
4. Blue

Fig. 5-11

Notes:

1. Connections must be correct.
   To avoid connection errors, couplers are used for connections of the flywheel magneto, C.D.I. unit and ignition coil.
   Take special care not to make wrong connections with the ground circuit, ignition coil, lighting circuit, etc.
2. Magnet removal
   To remove the magnets from the flywheel magneto, use the flywheel magnet puller (special tool).
   Never attempt to use a hammer. Damage may be caused to the magneto or the crankshaft.
3. Use care not to give a shock to the C.D.I. unit.
   Should you drop the C.D.I. unit to the ground, internal parts may be damaged.

(7) Ignition timing adjustment

1) Install the dial gauge and dial gauge stand #2 in the plug hole of the cylinder head.
2) Turn the flywheel magneto to bring the piston to top dead center, and set the dial gauge to zero.

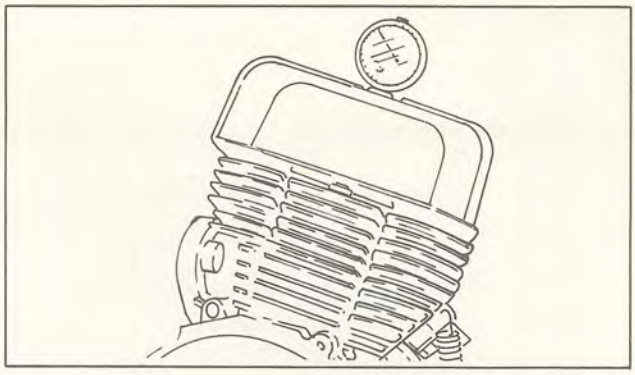

Fig. 5-12

3) Turn the flywheel magnet counter-clockwise, and set the ignition timing at 0.063 in. (1.6 mm.) B.T.D.C. This adjustment This adjustment can be done by turning the pulser. Loosen the two pan head screws tightening the puler, adjust the pulser so that the match mark on the flywheel magnet is aligned with timing mark on the pulser.

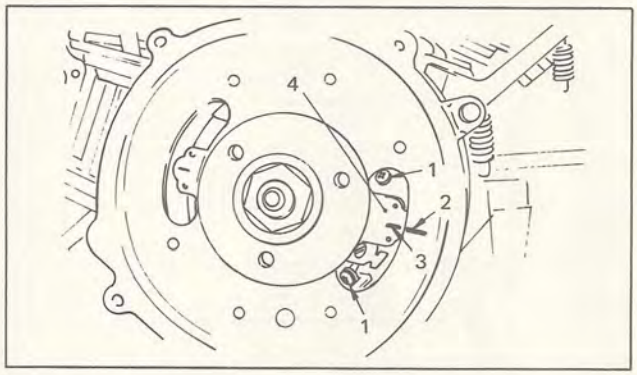

1. Pan head screw
2. Timing mark
3. Alignment mark
4. Pulser

Fig. 5-13

Note:

1) The difference in the ignition timing between the two cylinders should be zero.
2) To adjust the ignition timing with the engine being mounted, remove the tension spring, and then remove the exhaust pipe assemblies (R & L), starter assembly and starter pulley.

(8) C.D.I. Troubleshooting

No spark is produced.

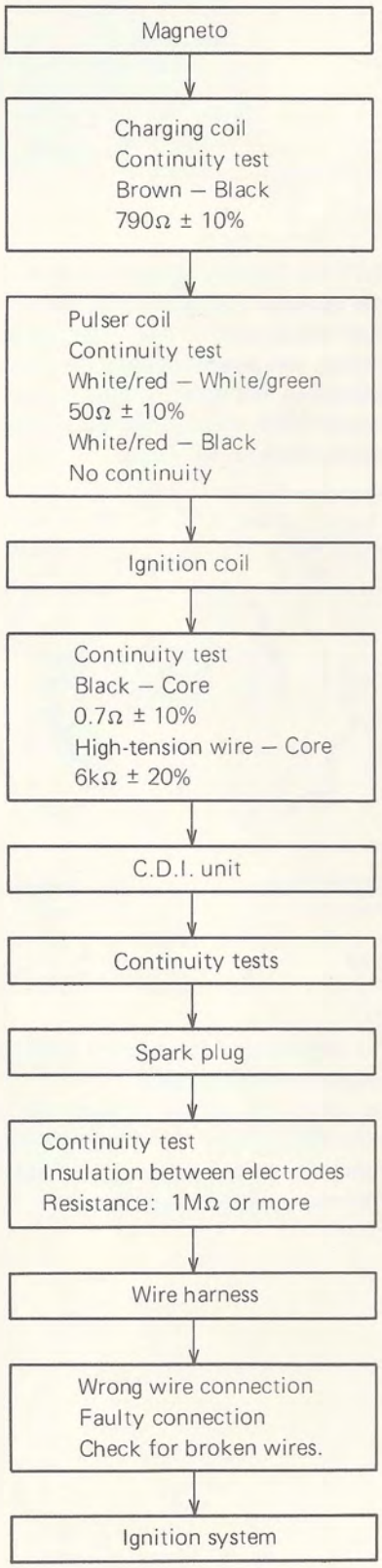

The engine starts but will not pick up speed.

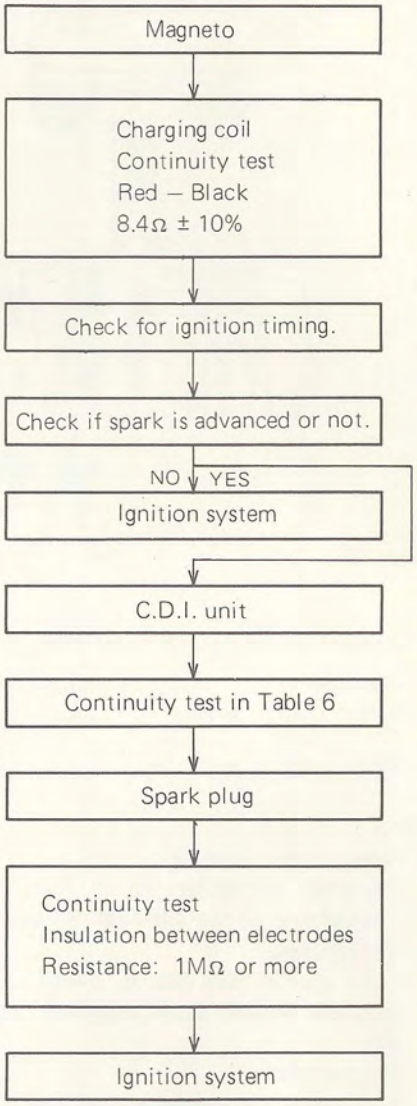

The engine is cranked again but will not start.

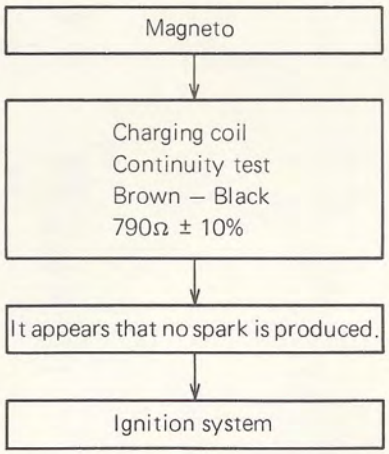

The engine tends to kick back.

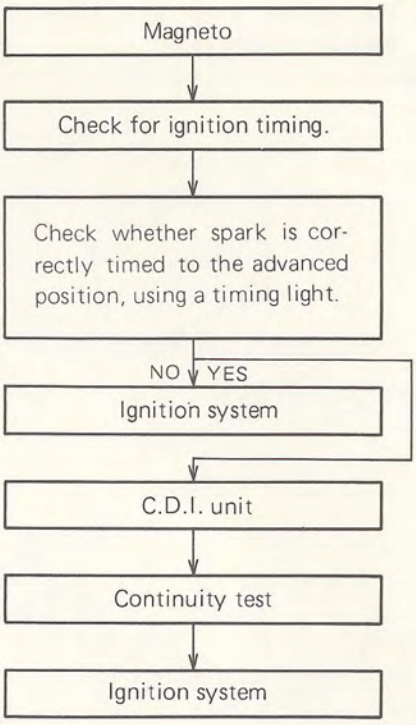

(9) Lighting circuit

The lighting circuit consists of the flywheel magneto, lighting coil, headlight, C.D.I. unit, tachometor, tail-light, main switch, and hight — low beam switch.

The stoplight circuit consists of the charging coil, flywheel magneto, C.D.I. unit stoplight switch, and stoplight.

If any one of the lights should burn out, replace it immediately; otherwise, the other lights will soon burn out.

1) Headlight beam angle adjustment

The headlight beam angle can be adjusted by loosening and tightning the four screws, mounting the lens assembly.

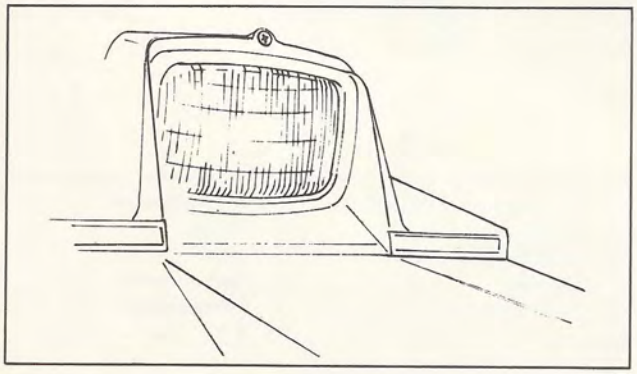

Fig. 5-14

2) Light bulb replacement

a) Headlight

Pull out the socket from inside of the shroud, and replace the light bulb.

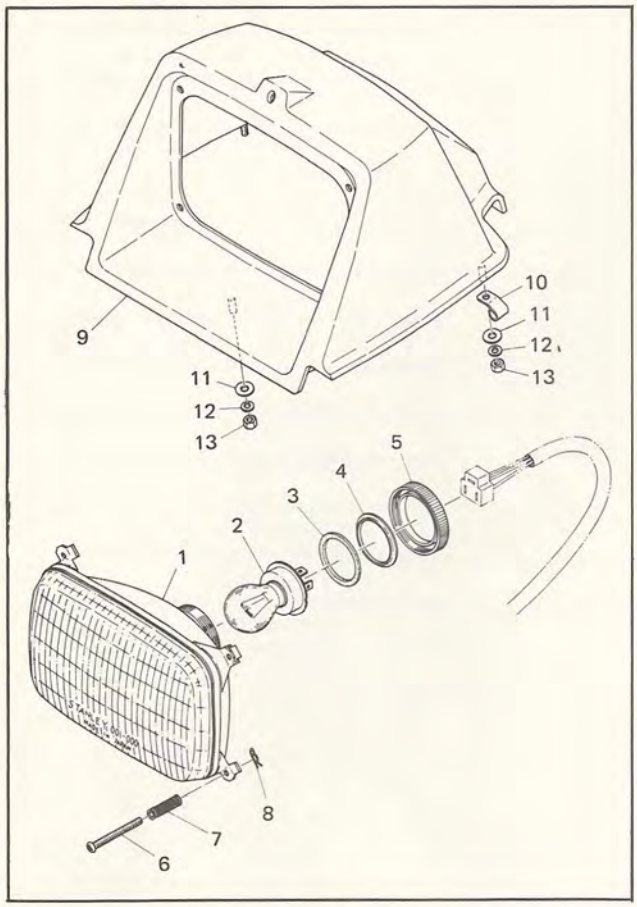

1. Lens assembly
2. Head lamp bulb
3. Bulb packing
4. Bulb plate
5. Cap ring
6. Adjusting screw
7. Adjusting screw spring
8. Clip
9. Head lamp body
10. Wire clip
11. Plate washer
12. Spring washer
13. Nut

Fig. 5-15

b) Tachometer

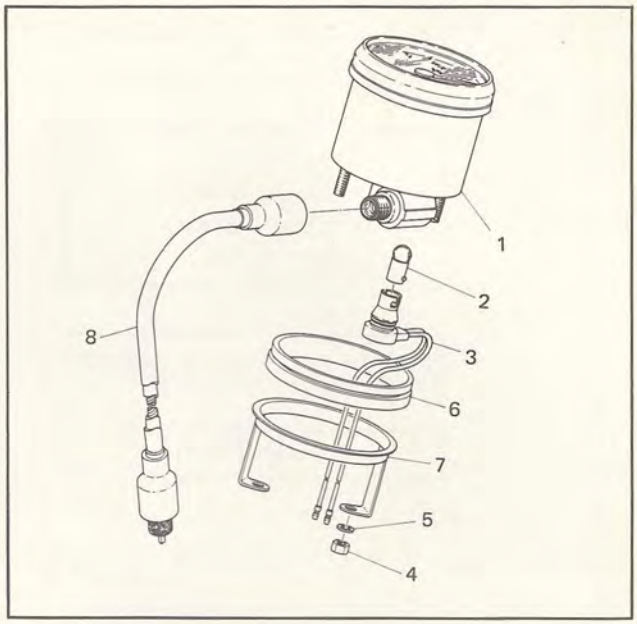

1. Tachometer assembly
2. Meter bulb (12V-3W)
3. Meter socket
4. Nut
5. Spring washer
6. Meter damper
7. Fitting plate
8. Speedometer cable assembly

Fig. 5-16

c) Tail-stoplight

Remove the four mounting screws and remove the lens.

Remove the light bulb from the socket and replace.

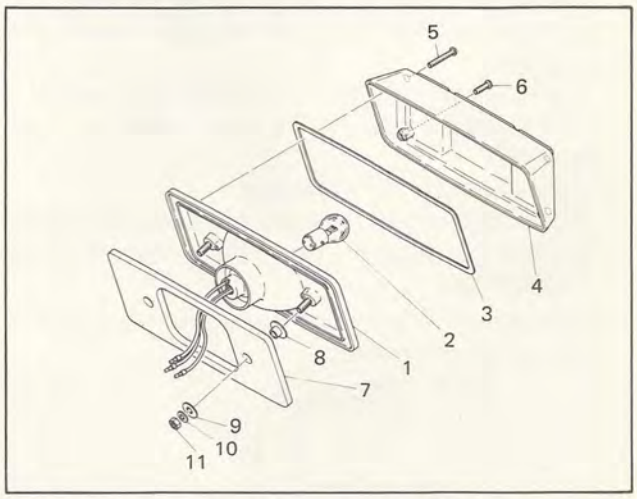

1. Tail-stoplight unit assembly
2. Tail-stoplight base
3. Tail-stoplight bulb
4. Base seat
5. Tail-stoplight lens
6. Pan head screw
7. Damper
8. Collar
9. Special washer
10. Spring washer
11. Nut

Fig. 5-17

Note:

For procedure to check the ignition coil, spark plug, spark plug gap, etc., refer to service manuals for other models.

The checking procedure is basically the same.

CHAPTER 6. TIGHTENING TORQUE

ENGINE

Parts to be tightened	Size	Tightening torque
Spark plug	0.55 in. (14 mm.)	18.0 — 21.6 ft-lbs. (2.5 — 3.0 m-kgs.)
Cylinder head mounting nut	0.3 in. (8 mm.)	First: 14.4 ft-lbs. (2.0 m-kgs.) Final: 16.6 — 19.5 ft-lbs. (2.3 — 2.7 m-kgs.)
Cylinder head mounting bolt	0.24 in. (6 mm)	14.4 ft-lbs. (2.0 m-kgs.)
C.D.I. rotor mounting nut	0.6 in. (16 mm.)	50.6 — 54.2 ft-lbs. (7.0 — 7.5 m-kgs.)
Crank case mounting bolt	0.3 in. (8 mm.)	First: 7.2 ft-lbs. (1.0 m-kg.) Final: 14.4 ft-lbs. (2.0 m-kgs.)
Starter pulley mounting bolt	0.3 in. (8 mm.)	7.2 — 8.6 ft-lbs. (1.0 — 1.2 m-kgs.)
Engine mounting nut	0.4 in. (10 mm.)	21.6 ft-lbs. (3.0 m-kgs.)

DRIVE

Parts to be tightened	Size	Tightening torque
Primary sheave mounting bolt	0.47 in. (12 mm.)	Initial: 43.3 ft-lbs. (6.0 m-kgs.) Loosen once and retighten: 28.9 ft-lbs. (4.0 m-kgs.)
Secondary sheave mounting nut	0.4 in. (10 mm.)	21.6 — 32.5 ft-lbs. (3.0 — 4.5 m-kgs.)
Bearing housing mounting nut	0.4 in. (10 mm.)	36.1 — 43.3 ft-lbs. (5.0 — 6.0 m-kgs.)
Chain drive sprocket mounting nut	0.55 in. (14 mm.)	36.1 — 43.3 ft-lbs. (5.0 — 6.0 m-kgs.)
Chain driven sprocket mounting bolt	0.4 in. (10 mm.)	36.1 — 43.3 ft-lbs. (5.0 — 6.0 m-kgs)
Chain housing cap mounting bolt	0.24 in. (6 mm.)	2.8 — 5.0 ft-lbs. (0.4 — 0.7 m-kg.)
Chain housing mounting nut	0.3 in. (8 mm.)	7.2 — 11.5 ft-lbs. (1.0 — 1.6 m-kgs.)
Brake caliper body mounting bolt	0.4 in. (10 mm.)	36.1 — 43.3 ft-lbs. (5.0 — 6.0 m-kgs.)
Front axle mounting nut	0.87 in. (22 mm.)	50.6 — 52.8 ft-lbs. (7.0 — 7.3 m-kgs.)
Front axle housing mounting nut	0.3 in. (8 mm.)	7.2 — 11.5 ft-lbs. (1.0 — 1.6 m-kgs.)
Suspension shaft 3 mounting bolt	0.3 in. (8 mm.)	18.0 — 21.6 ft-lbs. (2.5 — 3.0 m-kgs.)
Suspension pivot shaft mounting nut	0.4 in. (10 mm.)	36.1 — 43.3 ft-lbs. (5.0 — 6.0 m-kgs.)
Rear axle mounting bolt	0.4 in. (10 mm.)	36.1 — 43.3 ft-lbs. (5.0 — 6.0 m-kgs.)

CHASSIS

Parts to be tightened	Size	Tightening torque
Bumper end bracket mounting bolt	0.3 in. (8 mm.)	10.8 ft-lbs. (1.5 m-kgs.)
Engine mounting bolt	0.4 in. (10 mm.)	21.7 ft-lbs. (3.0 m-kgs.)
Level gauge holding bolt	0.24 in. (6 mm.)	3.6 ft-lbs. (0.5 m-kg.)
Ski runner mounting bolt	0.3 in. (8 mm.)	10.8 ft-lbs. (1.5 m-kgs.)
Steering column (1 & 2) mounting bolt	0.24 in. (6 mm.)	7.2 ft-kgs. (1.0 m-kg.)
Bolt securing steering column 2 to gate	0.24 in. (6 mm.)	3.6 ft-lbs. (0.5 m-kg.)
Steering lower bracket bolt	0.24 in. (6 mm.)	7.2 ft-lbs. (1.0 m-kg.)
Steering relay rod adjusting nut	0.4 in. (10 mm.)	18 ft-lbs. (2.5 m-kgs.)
Universal joint mounting nut	0.4 in. (10 mm.)	18 ft-lbs. (2.5 m-kgs.)
Outside arm mounting nut	0.4 in. (10 mm.)	21.7 ft-lbs. (3.0 m-kgs.)
Tank fitting band bolt	0.24 in. (6 mm.)	1.4 — 1.8 ft-lbs. (0.2 — 0.25 m-kg.)
Double seat rear holding nut	0.3 in. (8 mm.)	13.7 ft-lbs. (1.9 m-kgs.)
Brake lever holding screw and nut	0.2 in. (5 mm.)	2.9 ft-lbs. (0.4 m-kg.)
Throttle lever holding screw and nut	0.24 in. (6 mm.)	5.0 ft-lbs. (0.7 m-kg.)
Double seat front holding screw	0.24 in. (6 mm.)	2.9 ft-lbs. (0.4 m-kg.)

ELECTRICAL

Parts to be tightened	Size	Tightening torque
C.D.I. unit mounting bolt	0.2 in. (5 mm.)	2.9 ft-lbs. (0.4 m-kg.)
Taillight unit mounting nut	0.24 in. (6 mm.)	3.6 ft-lbs. (0.5 m-kg.)
Headlight body mounting nut	0.2 in. (5 mm.)	2.5 ft-lbs. (0.35 m-kg.)

FITTINGS

Parts to be tightened	Size	Tightening torque
Latch mounting nut	0.24 in. (6 mm.)	5.1 ft-lbs. (0.7 m-kg.)
Back-up plate (hinge) mounting nut	0.24 in. (6 mm.)	5.1 ft-lbs. (0.7 m-kg.)
Lower trim mounting nut	0.2 in. (5 mm.)	1 — 1.4 ft-lbs. (0.15 — 0.2 m-kg.)
Windshield mounting screw	0.2 in. (5 mm.)	1 — 1.4 ft-lbs. (0.15 — 0.2 m-kg.)
Front bumper complete (front) mounting nut	0.3 in. (8 mm.)	10 ft-lbs. (1.5 m-kgs.)
Front bumper complete (side) mounting nut	0.3 in. (8 mm.)	10 ft-lbs. (1.5 m-kgs.)
Bumper end mounting bolt	0.2 in. (5 mm.)	2.9 ft-lbs. (0.4 m-kg.)
Panel instrument mounting bolt	0.24 in. (6 mm.)	3.6 ft-lbs. (0.5 m-kg.)
Panel instrument rear mounting nut	0.3 in. (8 mm.)	13.7 ft-lbs. (1.9 m-kgs.)

Note:
Tightening torque tolerance is $^{+20\%}_{-10\%}$

Wiring and Piping

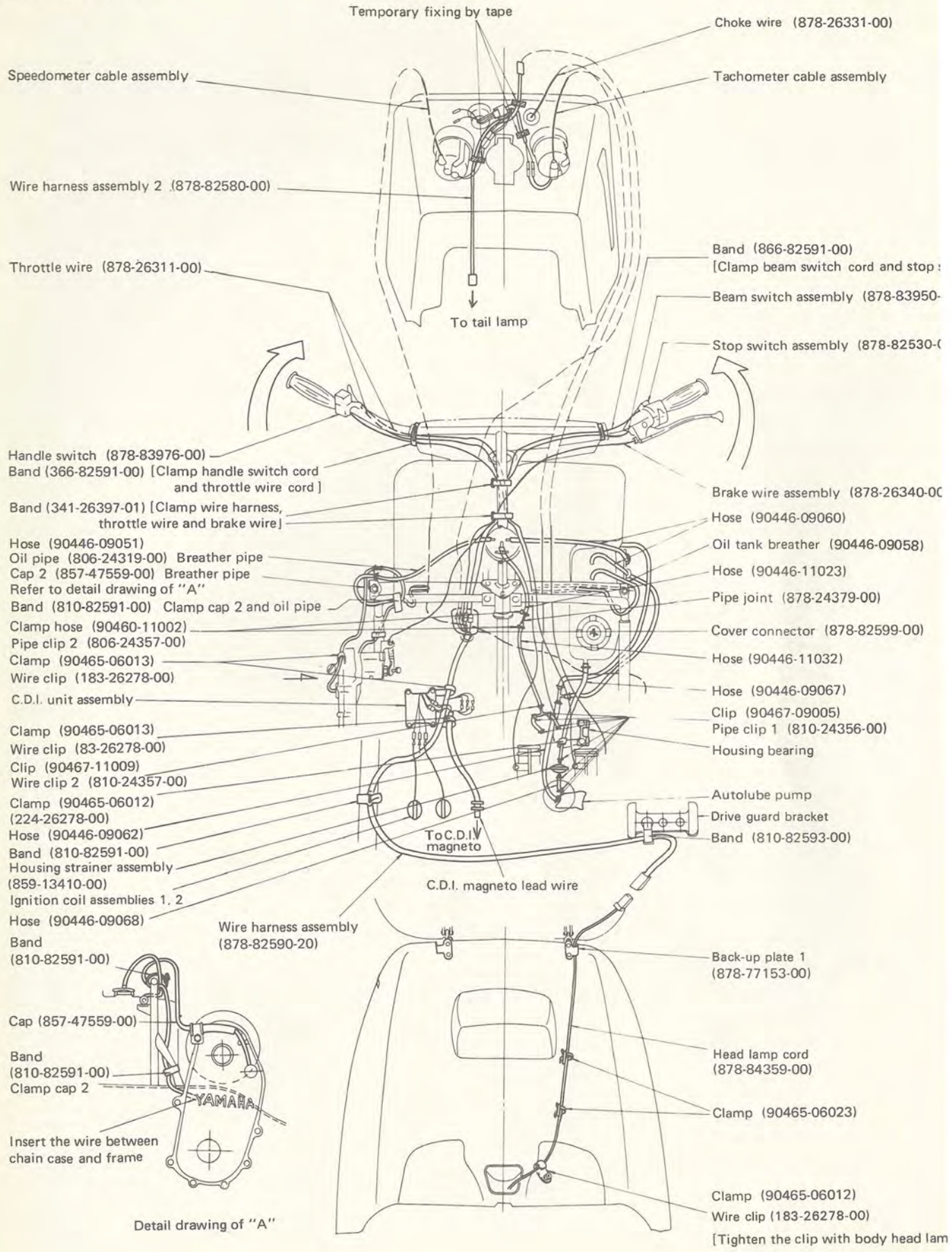

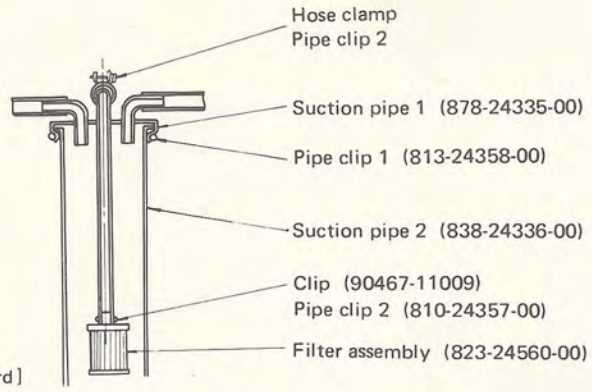

:h cord]

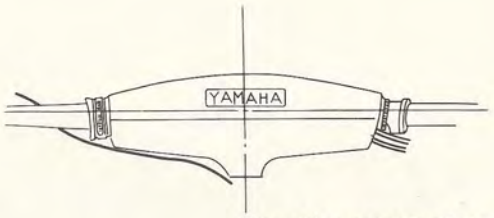

External appearance of steering pad with wiring completed

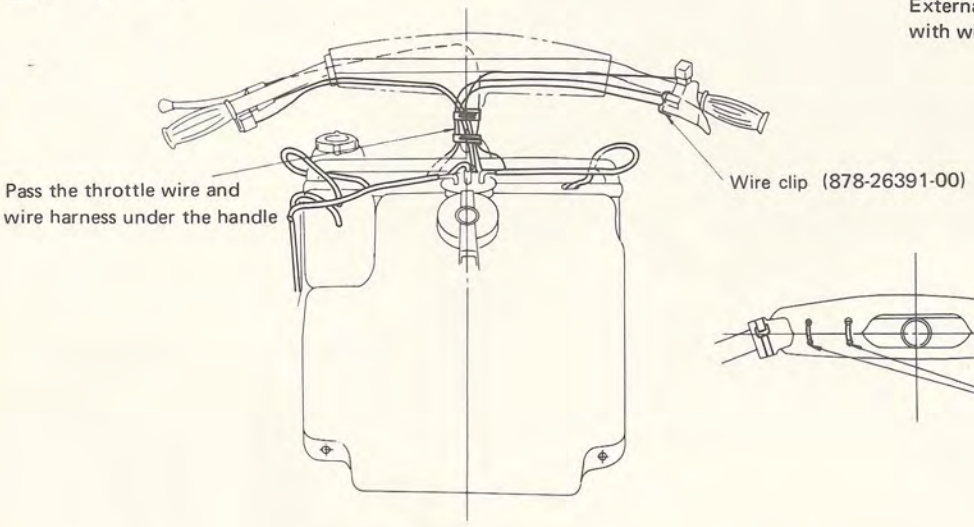

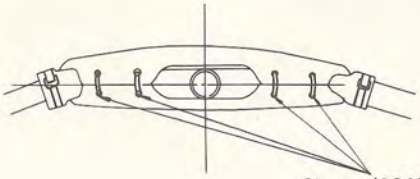

Clamp (90465-05024)

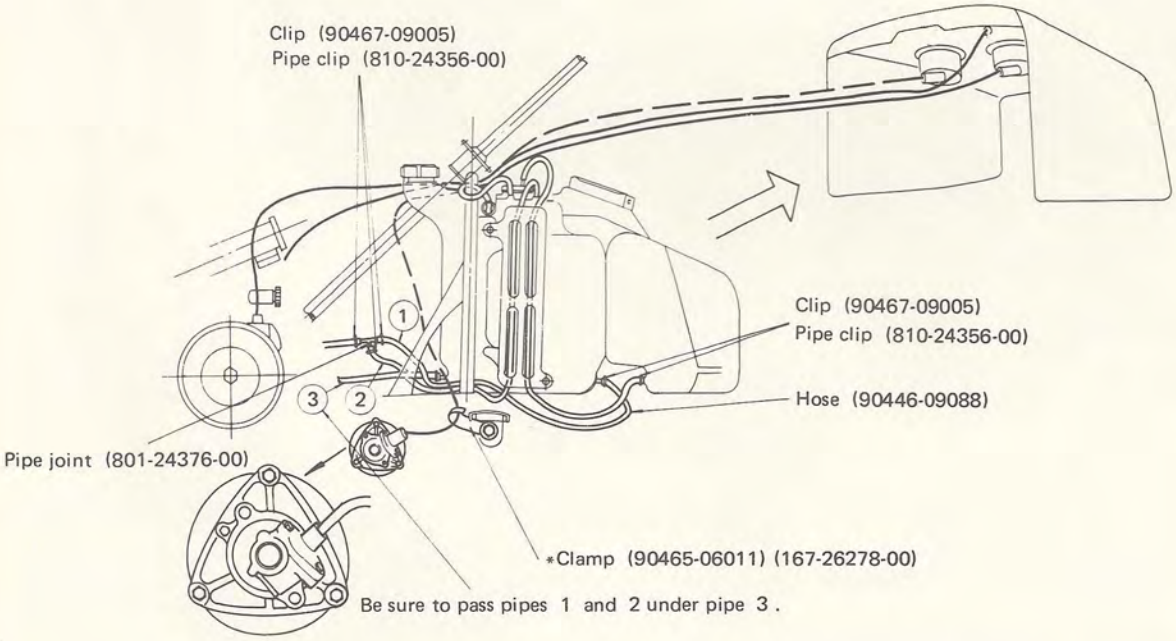

Note:

Speedometer unit is optionally installed, so speedometer cable and the clamp for it are optional parts: these parts are indicated by * mark in the drawing.

olt]