SNOJET

DIVISION OF CONROY OF CANADA INC.

1974
ENGINES

INDEX

	Page
YAMAHA: Y & S 292, Y & S 338, Y & S 433	3
Crank & Piston	4
Crankcase	10
Fancase / Air Shroud	16
Flywheel Magneto	20
Starter	24
Decompression (Y 292 only)	28
Electrical	30
Electrical Starter ("Y" engines only)	32
Intake/Exhaust	34
YAMAHA: SX 338 & 433	43
Crank & Piston	44
Crankcase/Cylinder	46
CDI Magneto	48
Starter	50
Electrical	52
Intake/Exhaust/Engine Mount	54
HIRTH: 193 R 03 (292 cc)	57
Crank/Piston/Crankcase	58
Flywheel/Electrical/Fan	62
Starter	66
HIRTH: 281 RO 14 (650 cc)	69
Crank/Piston/Crankcase	70
Intake/Exhaust/Fancase	72
Flywheel Magneto/Electrical	76
Starter	78

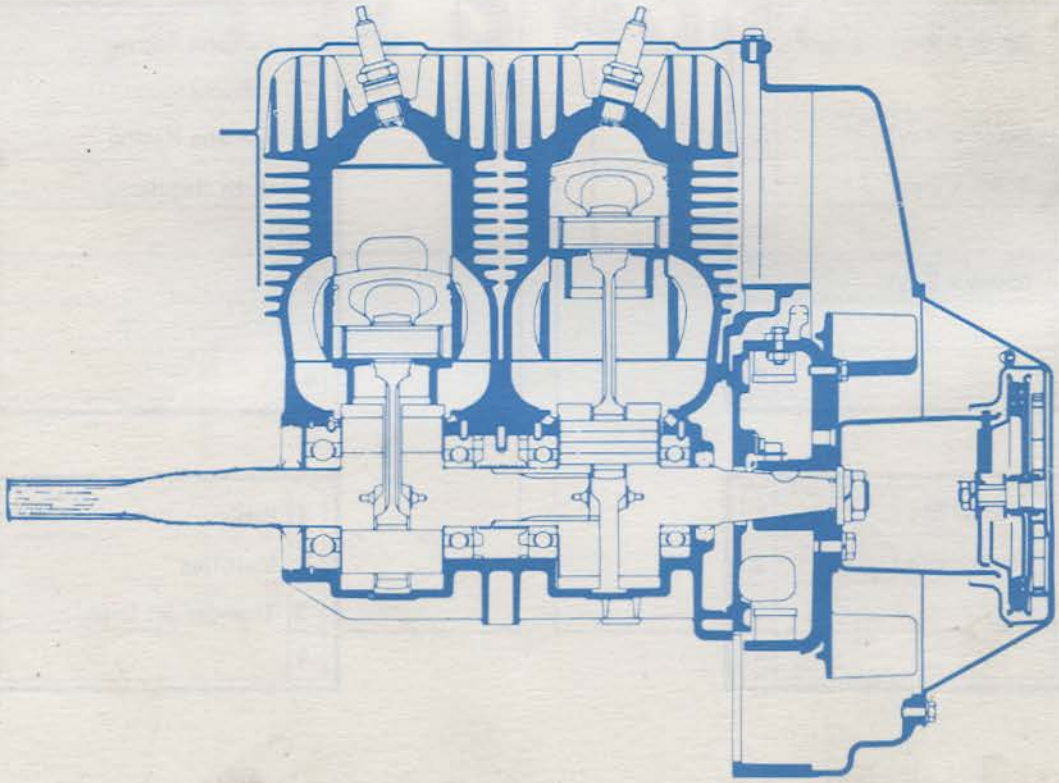

MODEL NUMBER-MASTER REFERENCE JULY 1973

YEAR

	1
	2
1973	3
1974	4
	5
	6
	7
	8

PECULIARITY

0	No peculiarity
1	
2	
3	
4	
5	
6	
7	

NAME

Star Jet	1
SST	2
Whisper Jet	3
Thunder Jet	4
Strato Jet	5
Astro Jet	6
Astro SS	7
Sabre Jet	8

FEATURE

0	No feature
1	Ring gear installed
2	Free air
3	
4	
5	
6	
7	

ENGINE SIZE

295cc x 1 cyl.	1
	2
340cc x 2 cyl.	3
440cc x 2 cyl.	4
	5
650cc x 2 cyl.	6
	7
	8

ENGINE MAKE & RATING

1	Yamaha Regular
2	Yamaha Sport
3	Yamaha Racing
4	Hirth Regular
5	
6	
7	
8	

OPTION

Manual Start	1
Electric Start	2
	3
	4

SUSPENSION

1	Bogie
2	Multiflex
3	Thunder Jet Susp.
4	

YAMAHA

Y & S 292 c.

Y & S 338 c.

Y & S 433 c.

CRANK & PISTON
Y292 – S292

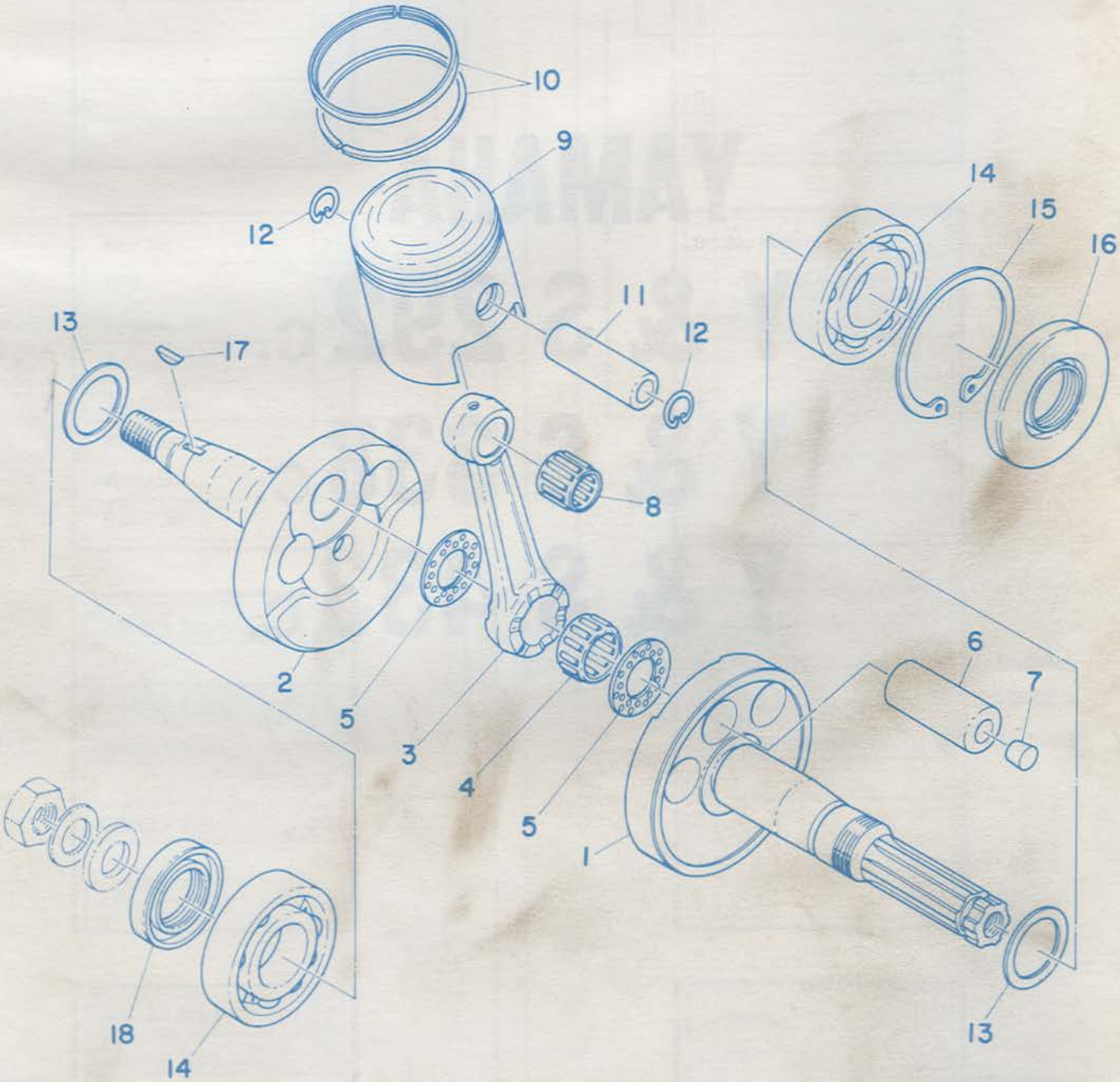

CRANK & PISTON

NO.	Sno'Jet	YAMAHA	DESCRIPTION	QTY. Y292	QTY. S292
–	811388	860-11400-00	Crank Assembly	1	1
1	811389	860-11412-01	• Crank, Left	1	1
2	811390	860-11429-00	• Crank, Right	1	1
3	810642	839-11651-00	• Rod, Connecting	1	1
4	810481	93310-42434	• Bearing, Connecting Rod, Big End	1	1
5	810218	152-11685-00	• Washer, Crank Pin	2	2
6	810235	822-11681-00	• Pin Crank	1	1
7	810137	822-11682-00	• Bushing, Pin Crank	2	2
8	811369	93310-21870	Bearing, Connecting Rod, Small End	1	1
9	811065	839-11631-00-96	Piston (72.96 mm Std.)	1	
9	811416	864-11631-00-96	Piston (72.96 mm Std.)		1
9	811066	839-11631-00-98	Piston (72.98 mm Std.)	1	
9	811417	864-11631-00-98	Piston (72.98 mm Std.)		1
9	811067	839-11635-00	Piston (73.25 mm 1st O.S)	1	
9	811418	864-11635-00	Piston (73.25 mm 1st O.S)		1
9	811068	839-11636-00	Piston (73.50 mm 2nd O.S)	1	
9	811419	864-11636-00	Piston (73.50 mm 2nd O.S.)		1
10	811069	839-11610-00	Piston Ring Set (Std.)	2	
10	811420	864-11610-00	Piston Ring Set (Std.)		1
10	811070	839-11610-10	Piston Ring Set (1st O.S)	2	
10	811421	864-11610-10	Piston Ring Set (1st O.S)		1
10	811071	839-11610-20	Piston Ring Set (2nd O.S)	2	
10	811422	864-11610-20	Piston Ring Set (2nd O.S)		1
11	810656	214-11633-00	Pin, Piston	1	
11	810579	818-11633-00	Pin, Piston		1
12	810245	604-11634-00	Clip, Piston Pin	2	2
13	810123	812-11561-00-02	Shim, Crank (32.2 - 44 - 02)	–	–
13	810124	812-11561-00-03	Shim, Crank (32.2 - 44 - 03)	–	–
14	010658	93306-30605	Bearing (B-6306 Special)	2	2
15	810659	93420-72023	Circlip (R-72)	1	1
16	810660	93103-32060	Oil Seal (SW-32-72-10)	1	1
17	810661	214-11545-01	Key, woodruff	1	1
18	810662	93103-32061	Oil Seal (SW-32-48-10)	1	1

CRANK & PISTON
Y & S 338 – Y & S 433

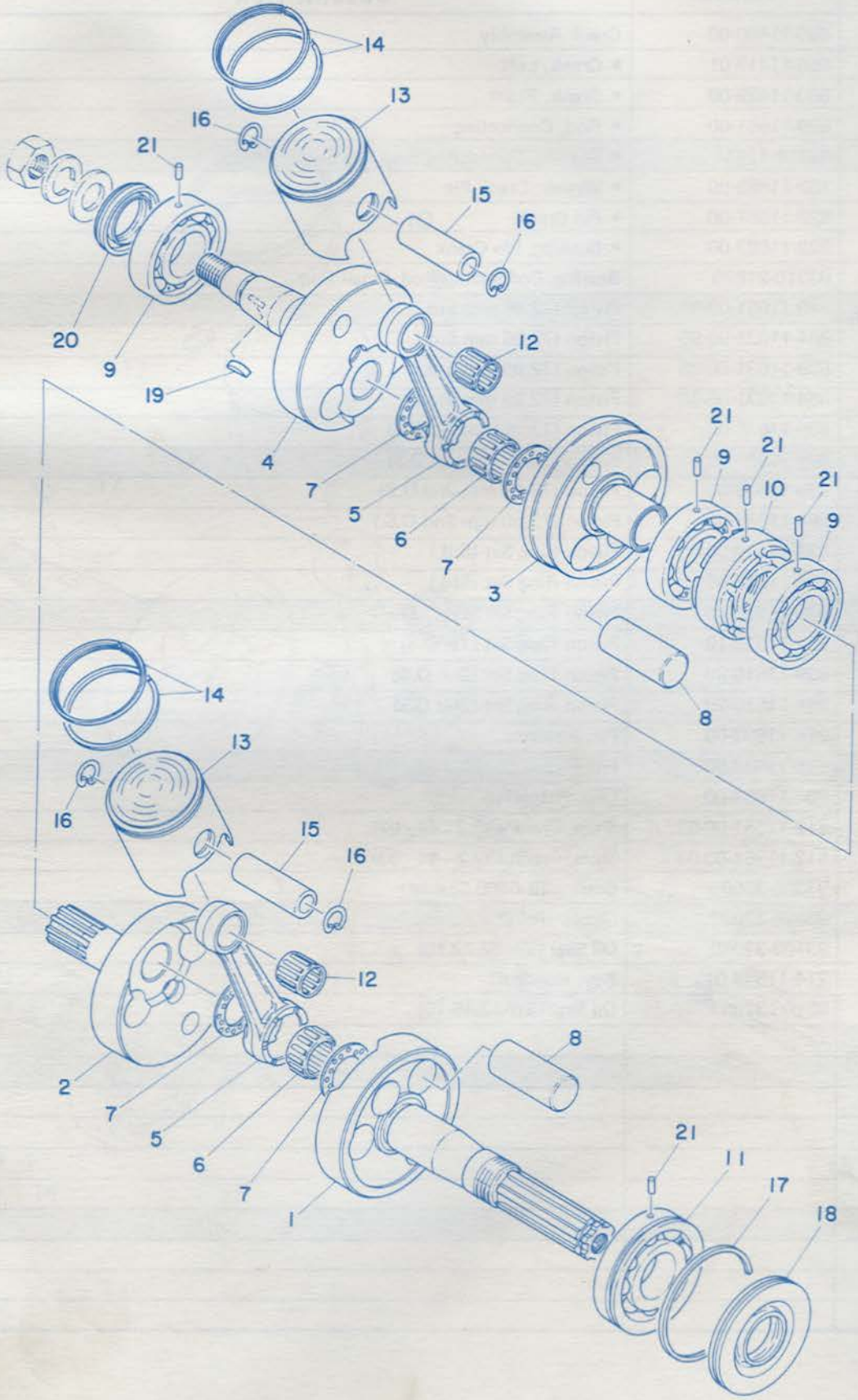

CRANK & PISTON

NO.	Jno'Jet	YAMAHA	DESCRIPTION	Y 338	S 338	Y 433	S 433
				QUANTITY			
–	811102	840-11400-00	Crank Assembly	1	1		
–	811138	838-11400-00	Crank Assembly			1	1
1	811104	838-11412-00	• Crank 1, Left	1	1	1	1
2	811106	824-11422-00	• Crank 1, Right	1	1		
2	811136	821-11422-00	• Crank 1, Right			1	1
3	811107	821-11432-00	• Crank 2, Left	1	1	1	1
4	811108	821-11442-00	• Crank 2, Right	1	1	1	1
5	811406	838-11651-00	• Rod, Connecting	2	2		
5	810242	838-11651-00	• Rod, Connecting			2	2
6	810481	93310-42434	• Bearing, Connecting Rod, Big End	2	2	2	2
7	810218	152-11685-00	• Washer, Crank Pin (24.2 - 38-1)	4	4	4	4
8	810235	821-11681-00	• Pin, Crank	2	2		
8	811109	821-11681-00	• Pin, Crank			2	2
9	810478	93306-20602	• Bearing (B-6206-63 Special)	3	3	3	3
10	810228	168-11515-00	• Seal Labyrinth	1	1		
10	810870	811-11515-00	• Seal Labyrinth			1	1
11	810520	93306-30603	• Bearing (B-306 C3 Special)	1	1	1	1
12	811369	93310-21870	Bearing, Connecting Rod, Small End)	2	2	2	2
13	811218	846-11631-00-96	Piston (59.96 mm Std.)	2			
13	811439	876-11631-00-96	Piston (59.96 mm Std.)		2		
13	810598	819-11631-00-96	Piston (67.96 mm Std.)			2	
13	811454	866-11631-00-96	Piston (67.96 mm Std.)				2
13	811219	846-11631-00-98	Piston (59.98 mm Std.)	2			
13	811440	865-11631-00-98	Piston (59.98 mm Std.)		2		
13	810127	819-11631-00-98	Piston (67.98 mm Std.)			2	
13	811455	866-11631-00-98	Piston (67.98 mm Std.)				2
13	811220	846-11635-00	Piston (60.25 mm 1st O.S)	2			
13	811441	865-11635-00	Piston (60.25 mm 1st O.S)		2		
13	810574	819-11635-10	Piston (68.25 mm 1st O.S)			2	
13	811456	866-11635-10	Piston (68.25 mm 1st O.S)				2
13	811221	846-11636-00	Piston (60.50 mm 2nd O.S)	2			
13	811442	865-11636-00	Piston (60.50 mm 2nd O.S)		2		
13	810575	819-11636-20	Piston (68.50 mm 2nd O.S)			2	
13	811457	866-11636-20	Piston (68.50 mm 2nd O.S)				2
14	811222	846-11610-00	Piston Ring Set (Std.)	2	1		
14	810576	818-11601-00	Piston Ring Set (Std.)			2	
14	810915	820-11611-00	Piston Ring Set (Std.)				1
14	811223	846-11610-10	Piston Ring Set (1st O.S)	2	1		
14	810577	818-11601-10	Piston Ring Set (1st O.S)			2	
14	811049	820-11611-20	Piston Ring Set (1st O.S)				1
14	811224	846-11610-20	Piston Ring Set (2nd O.S)	2	1		
14	810578	818-11601-20	Piston Ring Set (2nd O.S)			2	
14	810050	820-11611-20	Piston Ring Set (2nd O.S)				1

CRANK & PISTON
Y & S 338 – Y & S 433

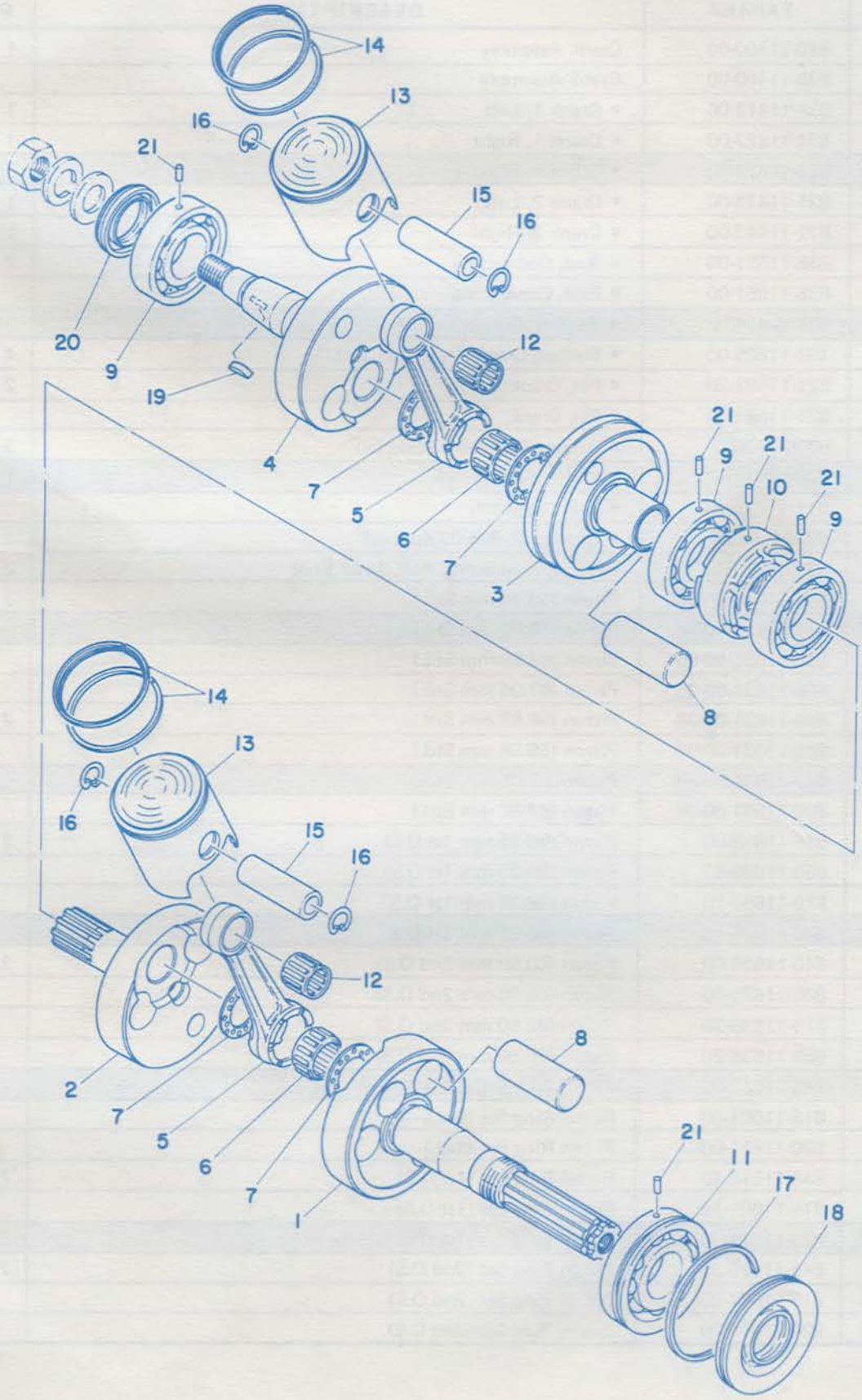

CRANK & PISTON

NO.	Jet-Ski	YAMAHA	DESCRIPTION	QUANTITY Y 338	S 338	Y 433	S 433
15	810233	168-11638-00	Pin, Piston	2	2		
15	810579	818-11633-00	Pin, Piston			2	2
16	810245	604-11634-00	Clip, Piston Pin	4	4	4	4
17	810484	93440-78011	Circlip (78 Dia. Special)	1	1	1	1
18	810474	93103-32054	Oil Seal (SW-32-78-10)	1	1	1	1
19	811110	322-11545-00	Key Woodruff	1	1	1	1
20	810475	93103-32055	Oil Seal (SW-32-48-10)	1	1	1	1
21	810485	93604-12037	Pin, Dowel (4-12)	5	5	5	5

CRANKCASE
Y 292 - S 292

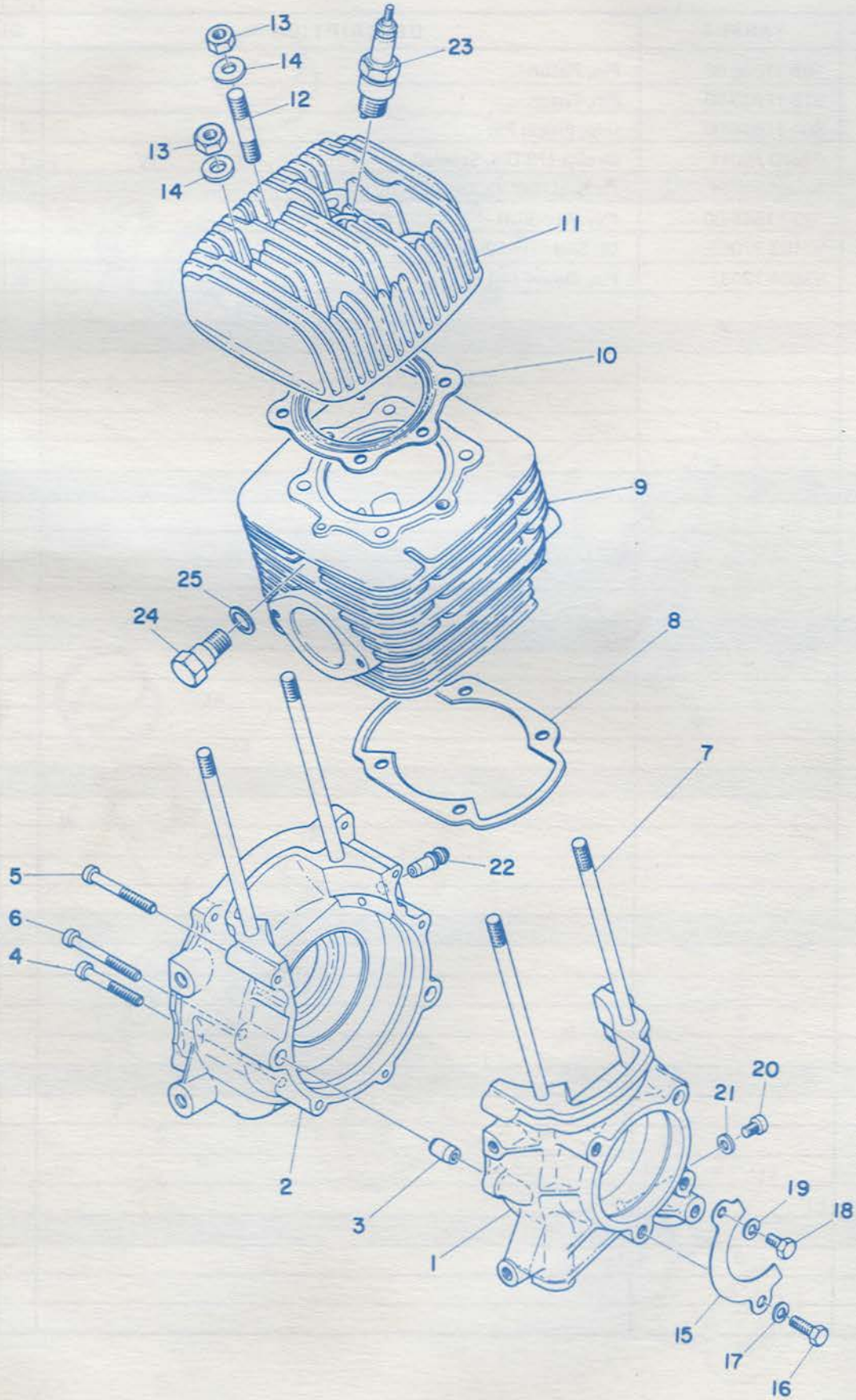

CRANKCASE

NO.	Sno-Jet	YAMAHA	DESCRIPTION	QTY. Y292	QTY. S292
1	810600	839-15111-00	Case, Crank, Left	1	1
2	810601	839-15121-00	Case, Crank, Right	1	1
3	810602	91810-02015	Pin, Dowel (6.4 - 10 - 15)	2	2
4	810603	92501-06045	Screw, Panhead	3	3
5	810604	92501-06050	Screw, Panhead	2	2
6	810605	92501-06055	Screw, Panhead	2	2
7	810606	812-11361-00	Bolt, Cylinder Holding	4	4
8	810607	812-11351-00	Gasket, Cylinder	1	1
9	810608	822-11311-00	Cylinder	1	
9	811413	864-11311-00	Cylinder		1
10	810609	812-11181-00	Gasket, Cylinder Head	1	1
11	811385	853-11111-00	Head, Cylinder	1	
11	811200	845-11111-00	Head, Cylinder		1
12	810611	812-11179-00	Bolt, Stud	2	2
13	810612	812-11171-00	Nut, Holding	6	6
14	810613	812-11175-00	Washer, Holding (8.5 - 19 - 2.6)	6	6
15	810144	822-15118-09	Holder, Oil Seal	1	1
16	810069	91201-06020	Bolt	1	1
17	810454	91901-06100	Washer, Spring	1	1
18	811386	91201-08012	Bolt	1	
19	810456	92901-08100	Washer, Spring	1	
20	810439	92501-06010	Screw, Panhead	1	1
21	811201	838-15384-00	Gasket, Screw	1	1
22	810620	812-24461-00	Pipe Joint	1	1
23	810188	94701-00044	Plug, Spark (NGK B-7ES)	1	
23	811197	94701-00051	Plug, Spark (Champion N-2G)		1
24	811387	860-11313-00	Plug, Blind	1	
25	810190	812-11198-00	Gasket	1	

CRANKCASE
Y 338 – S 338

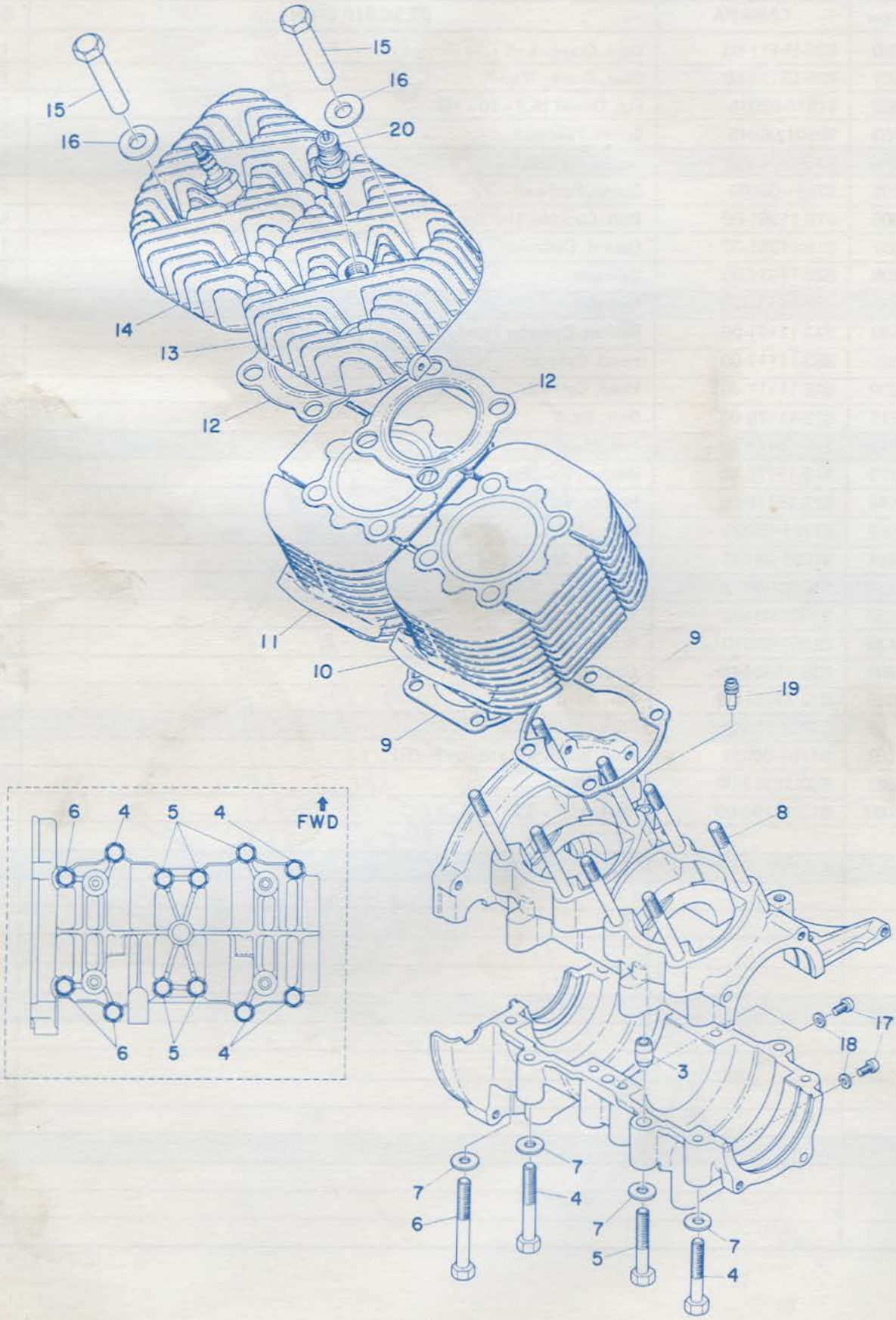

CRANKCASE

NO.	SnoJet	YAMAHA	DESCRIPTION	QTY. Y338	QTY. S338
–	811209	846-15100-00	Crankcase Assembly	1	1
3	810437	91810-08016	• Pin, Dowel A (9.8 - 12 - 16)	2	2
4	810879	97101-08050	Bolt	4	4
5	810490	97101-080060	Bolt	5	5
6	810491	97101-080070	Bolt	3	3
7	810457	92901-08200	Washer, Plain	12	12
8	810243	248-11361-00	Bolt, Cylinder Holding	8	8
9	811211	846-11351-00	Gasket, Cylinder	2	2
10	811435	865-11311-00	Cylinder, Left		1
10	811402	859-11311-00	Cylinder, Left	1	
11	811436	865-11321-00	Cylinder, Right		1
11	811403	859-11321-00	Cylinder, Right	1	
12	810328	806-11181-00	Gasket, Cylinder Head	1	1
13	811404	859-11111-00	Head, Cylinder, Left	1	
13	811437	865-11111-00	Head, Cylinder, Left		1
14	811405	859-11121-00	Head, Cylinder, Right	1	
14	811438	865-11121-00	Head, Cylinder, Right		1
15	811018	824-11121-00	Nut, Cylinder Holding	8	8
16	810460	92901-12200	Washer, Plain	8	8
17	810439	92601-06010	Screw, Panhead	2	2
18	811201	838-15364-00	Gasket, Screw	2	2
19	810620	812-24461-00	Pipe, Joint	1	1
20	811197	94701-00051	Plug, Spark (N-2G Champion)		1
20	811095	94701-00040	Plug, Spark (B-7HS) NGK	1	

CRANKCASE
Y 433 – S 433

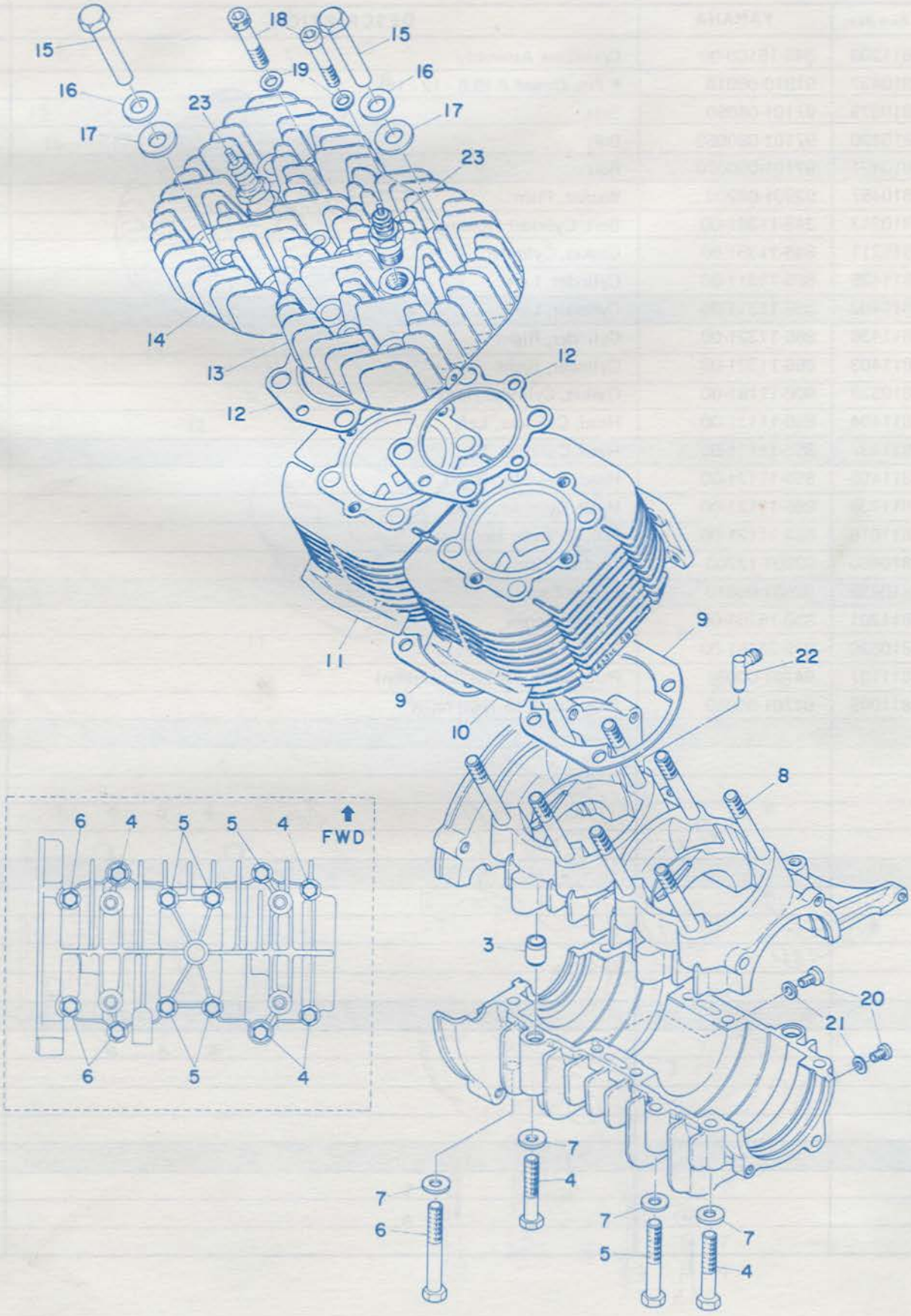

CRANKCASE

NO.	SNO'JET	YAMAHA	DESCRIPTION	QTY. Y433	QTY. S433
—	811209	846-15100-01	Crankcase Assembly	1	
—	811128	838-15100-01	Crankcase Assembly		1
3	811408	91810-05016	• Pin, Dowel, A (8.4 - 12 - 16)	2	2
4	810879	97101-08050	Bolt	4	4
5	810490	97101-08060	Bolt	5	5
6	810491	97101-08070	Bolt	3	3
7	810457	92901-08020	Washer, Plain	12	12
8	810243	248-11361-00	Bolt, Cylinder Holding	8	8
9	810880	811-11351-00	Gasket, Cylinder	2	2
10	811131	838-11311-00	Cylinder, Left	1	
10	811447	866-11311-00	Cylinder, Left		1
11	811132	838-11321-00	Cylinder, Right	1	
11	811448	866-11321-00	Cylinder, Right		1
12	810589	818-11181-00	Gasket, Cylinder Head	2	
12	810945	828-11181-00	Gasket, Cylinder Head		2
13	810594	838-11111-00	Head, Cylinder, Left	1	
13	811449	866-11111-00	Head, Cylinder, Left		1
14	810595	838-11121-00	Head, Cylinder, Right	1	
14	811450	866-11121-00	Head, Cylinder, Right		1
15	811018	824-11171-00	Nut, Cylinder Holding	8	8
16	810592	164-16119-00	Spring, Bellevile	8	8
17	810460	92901-12200	Washer, Plain	8	
18	811451	91318-08050	Bolt		8
19	810457	92901-08200	Washer, Plain		8
20	810439	92501-06010	Screw, Panhead	2	2
21	811201	838-15384-00	Gasket, Screw	2	2
22	810620	812-24461-00	Pipe, Joint	1	
22	811452	866-24461-00	Pipe, Joint		1
23	811095	94701-00040	Plug, Spark (NGK B-7HS)	2	
23	811193	94701-00052	Plug, Spark (Champion (N-3G)		2

FAN CASE – AIR SHROUD
Y 292 – S 292

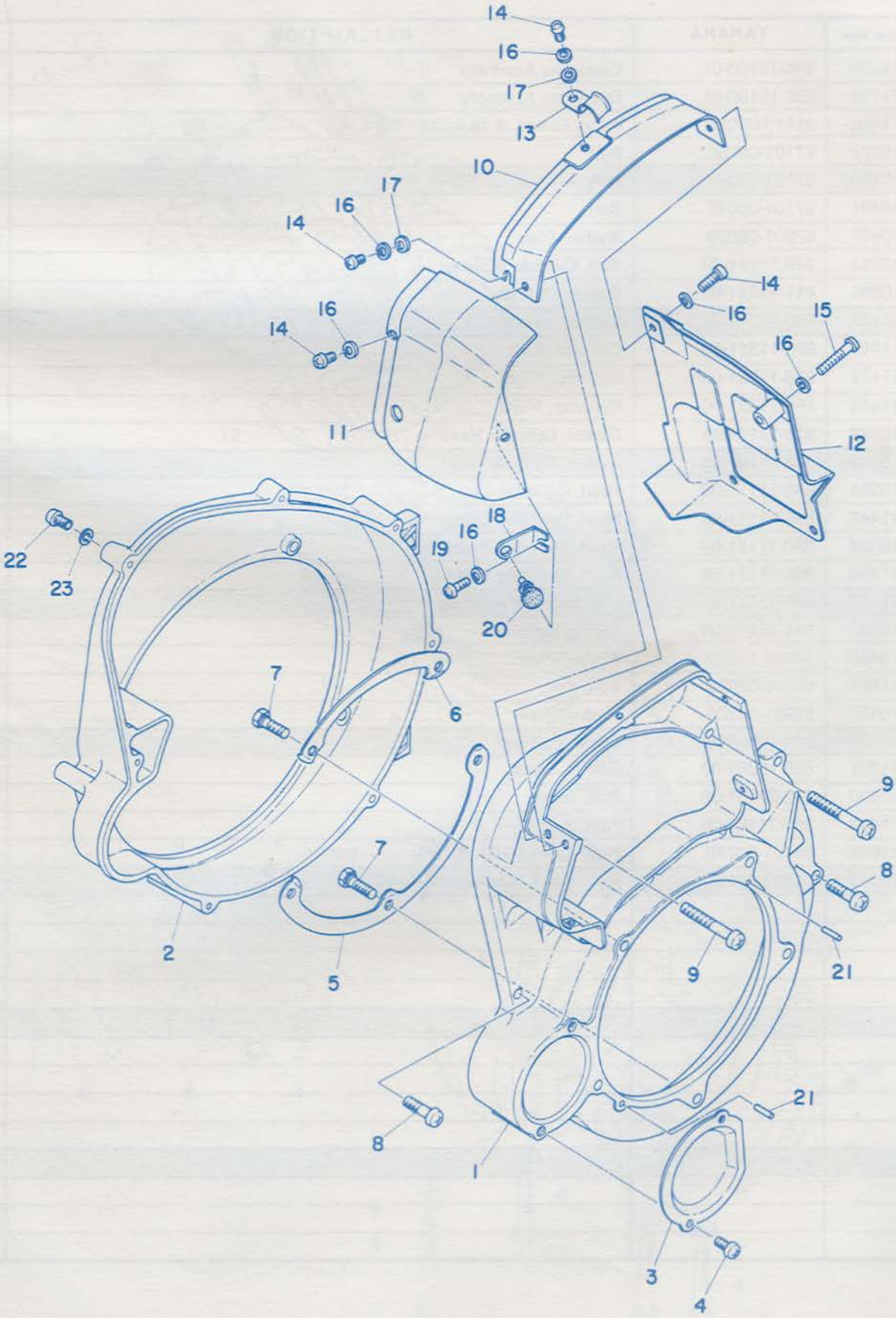

FAN CASE-AIR SHROUD

NO.	Sno-Jet	YAMAHA	DESCRIPTION	QTY. Y292	QTY. S292
1	810621	839-12621-00	Case, Fan 1	1	1
2	810622	839-12622-00	Case, Fan 2	1	
2	811414	864-12622-00	Case, Fan 2		1
3	810623	812-12633-00	Plate	1	1
4	810624	98501-05010	Screw, Panhead	2	2
5	810625	812-12624-00	Washer, Lock 1	1	1
6	810626	812-12625-00	Washer, Lock 2	1	1
7	810627	812-12623-00	Bolt	5	5
8	810443	92506-06025	Screw, Panhead	5	5
9	810604	92506-06050	Screw, Panhead	2	2
10	810631	839-12651-00	Air Shroud, Cylinder 1	1	1
11	810632	822-12652-00	Air Shroud, Cylinder 2	1	1
12	810191	839-12653-00	Air Shroud, Cylinder 3	1	
12	811415	864-12653-00	Air Shroud, Cylinder 3		1
13	810193	822-82361-00	Clamp, Cord	1	1
14	811030	98906-05012	Screw, Bind	6	6
15	810192	98906-05030	Screw, Bind	1	1
16	810453	92906-05100	Washer, Spring	8	8
17	810635	92906-05200	Washer, Plain	3	3
18	811012	822-12655-00	Stay, Clamp	1	1
19	810633	98906-05010	Screw, Bind	1	1
20	810637	812-12658-00	Damper, Air Shroud Cylinder	1	1
21	810486	93604-14012	Pin, Dowel (4-13.8)	2	2
22	810439	92506-06010	Screw, Panhead	1	1
23	810454	92906-06100	Washer, Spring	1	1
–	120435	–	Sticker Sno-Jet (Fan Case)	1	1

FAN CASE – AIR SHROUD
Y & S 338 – Y & S 433

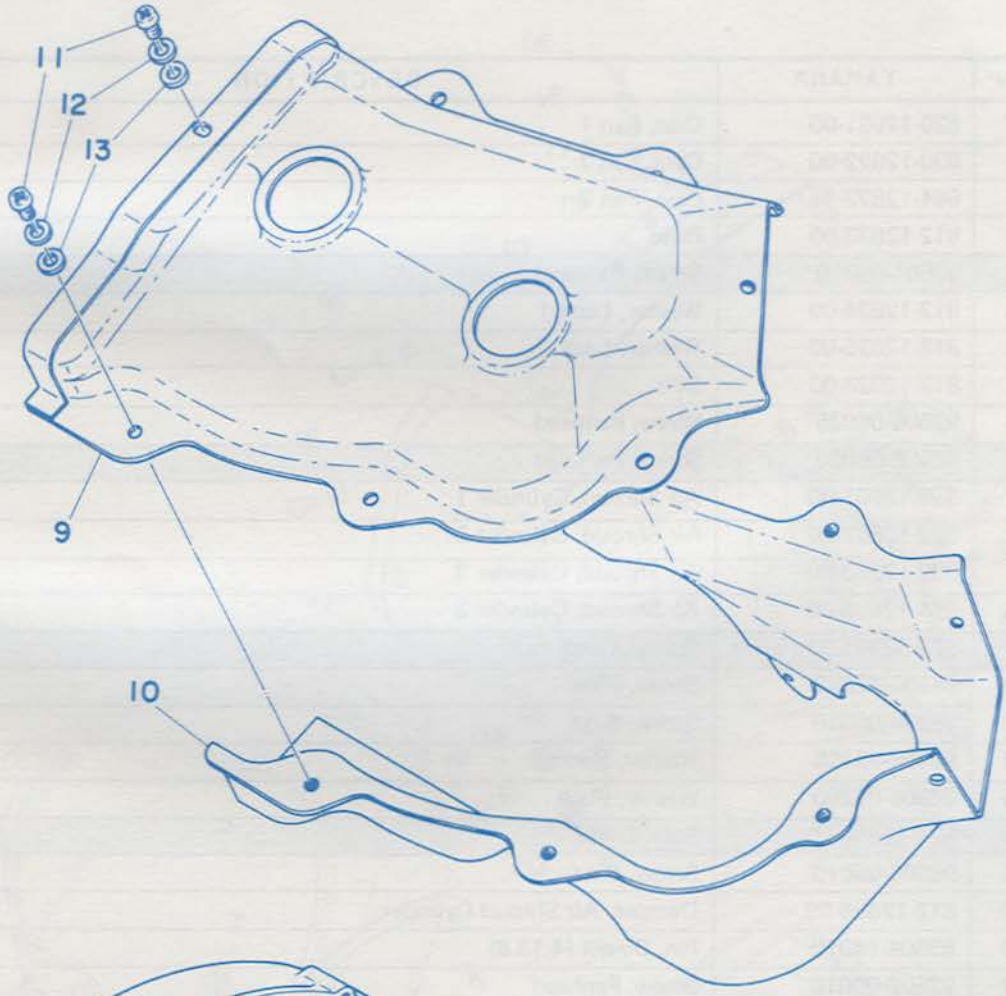

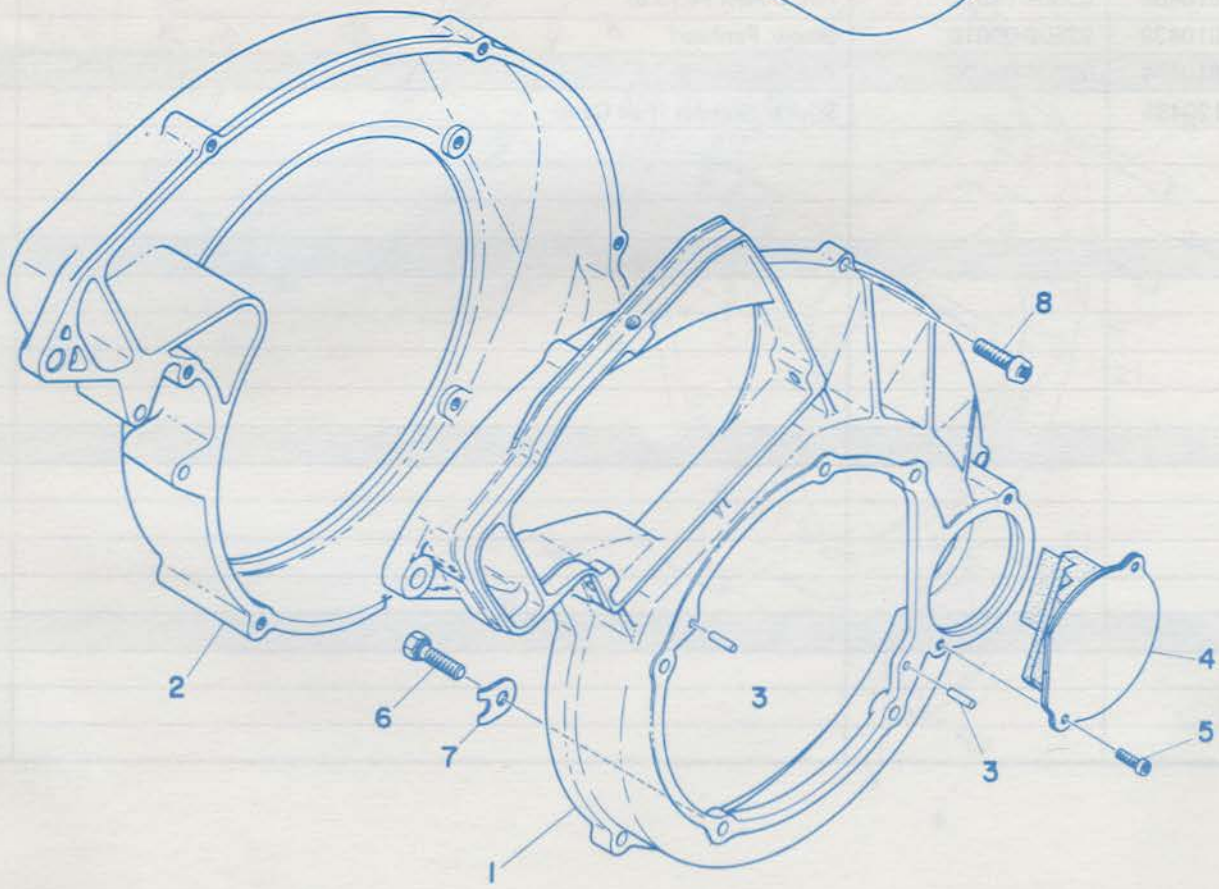

FAN CASE-AIR SHROUD

NO.	Sno-Jet	YAMAHA	DESCRIPTION	QUANTITY Y 338	S 338	Y 433	S 433
1	811097	838-12621-00	Case, Fan 1	1	1	1	1
2	811098	838-12622-00	Case, Fan 2	1	1	1	1
3	810485	93604-12037	Pin, Dowel B (4-12)	2	2	2	2
4	810820	821-12633-00	Plate	1	1	1	1
5	810624	98501-05010	Screw, Panhead	2	2	2	2
6	810395	807-12623-00	Bolt	5	5	5	5
7	811099	838-12624-00	Washer, Lock	5	5	5	5
8	810443	92506-06025	Screw, Panhead	6	6	6	6
9	811100	840-12651-00	Air Shroud, Cylinder 1	1	1		
9	810581	838-12651-00	Air Shroud, Cylinder 1			1	1
9	020383	–	Air Shroud Cylinder (Chrome, Sabre-Jet)				1
10	811101	840-12652-00	Air Shroud, Cylinder 2	1	1		
10	810582	838-12652-00	Air Shroud, Cylinder 2			1	
10	811453	866-12652-00	Air Shroud, Cylinder 2				1
11	810448	92506-06012	Screw, Panhead	10	10	10	10
12	810454	92906-06100	Washer, Spring	10	10	10	10
13	810455	92906-06200	Washer, Plain	10	10	10	10
–	120435	–	Sticker Sno-Jet (Fan Case)	1	1	1	1

FLYWHEEL MAGNETO
Y 292 – S 292

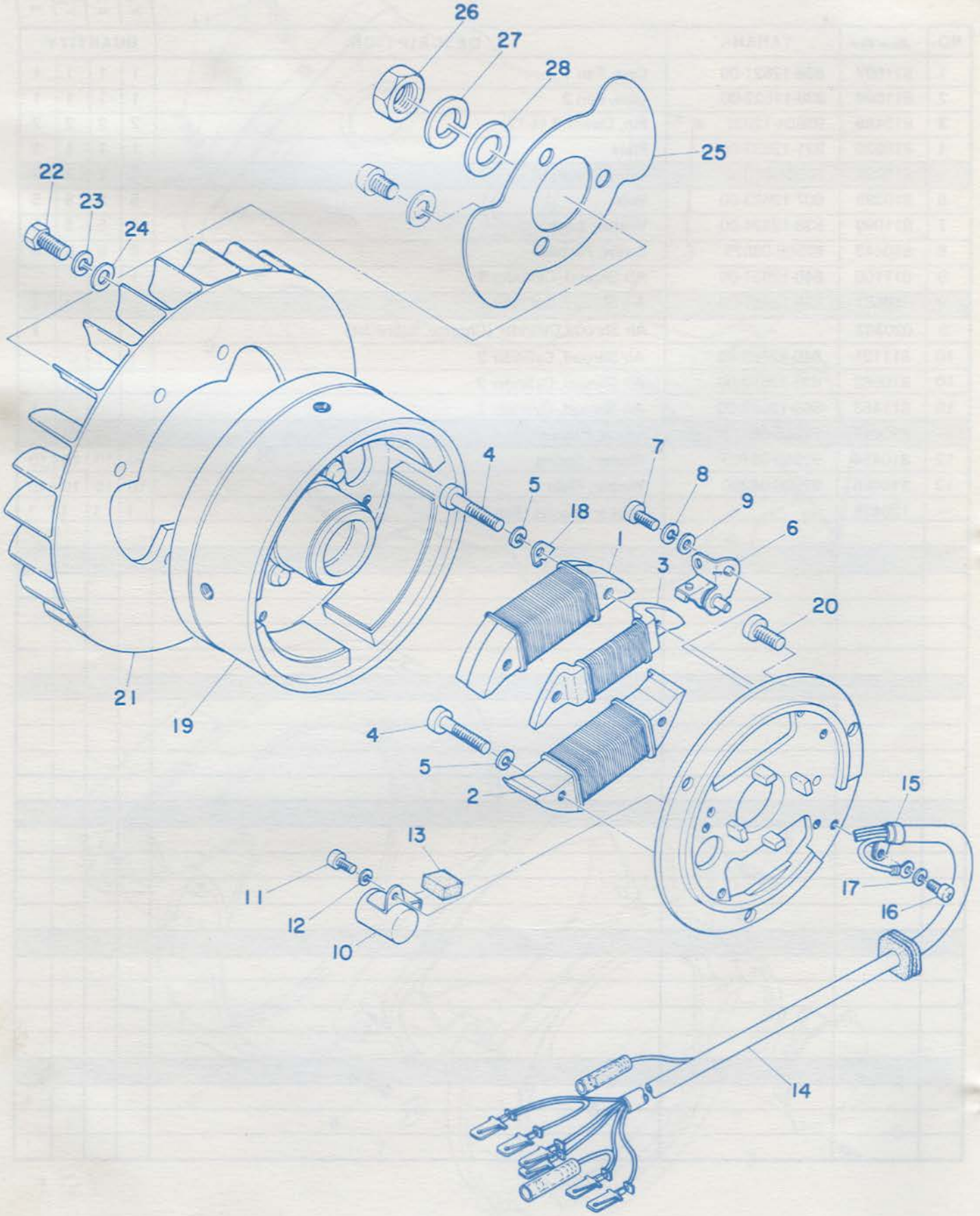

FLYWHEEL MAGNETO

NO.	SnoJet	YAMAHA	DESCRIPTION	QTY. Y292	QTY. S292
–	811396	860-81300-25	Flywheel Magneto Assembly	1	1
1	811079	839-81312-20	• Coil, Source	1	1
2	811081	839-81313-20	• Coil, Lighting 1	1	1
3	811082	839-81314-20	• Coil, Lighting 2	1	1
4	810319	802-81345-20	• Screw, Panhead (5-25)	4	4
5	810453	92901-05100	• Washer, Spring	4	4
6	810365	806-81321-20	• Contact Breaker Assembly	1	1
7	810211	110-81347-20	• Screw, Panhead (4-12)	1	1
8	810451	92901-04100	• Washer, Spring	1	1
9	810452	92901-04200	• Washer, Plain	1	1
10	811397	861-81325-20	• Condenser	1	1
11	810210	110-81346-20	• Screw, Panhead (4-10)	1	1
12	810451	92901-04100	• Washer, Spring	1	1
13	811398	116-81331-20	• Lubricator	1	1
14	811084	839-81315-25	• Lead Wire Assembly	1	1
15	810208	104-81328-20	• Clamp, Lead	1	1
16	810085	165-81145-20	• Screw, Panhead (4-8)	1	1
17	810451	92901-04100	• Washer, Spring	1	1
18	811119	812-81332-20	• Plate, Timing	1	1
19	811086	839-81350-20	• Rotor, Assembly	1	
19	811432	860-81350-20	• Rotor, Assembly		1
20	810441	92501-06015	• Screw, Panhead	3	3
21	810719	812-12611-00	Fan	1	1
22	811399	90101-06127	Bolt	6	6
23	810454	92901-06100	Washer, Spring	6	6
24	810455	136-22316-00	Washer, Plain	6	6
25	810722	812-81362-00	Cover, Hole	1	1
26	810229	168-11555-00	Nut, Crank Shaft	1	1
27	810454	92901-16100	Washer, Spring	1	1
28	810381	807-11557-00	Washer, 1	1	1
–	810183	839-81891-01	Ring Gear (See Electric Starter)	1	

FLYWHEEL MAGNETO
Y & S 338 – Y & S 433

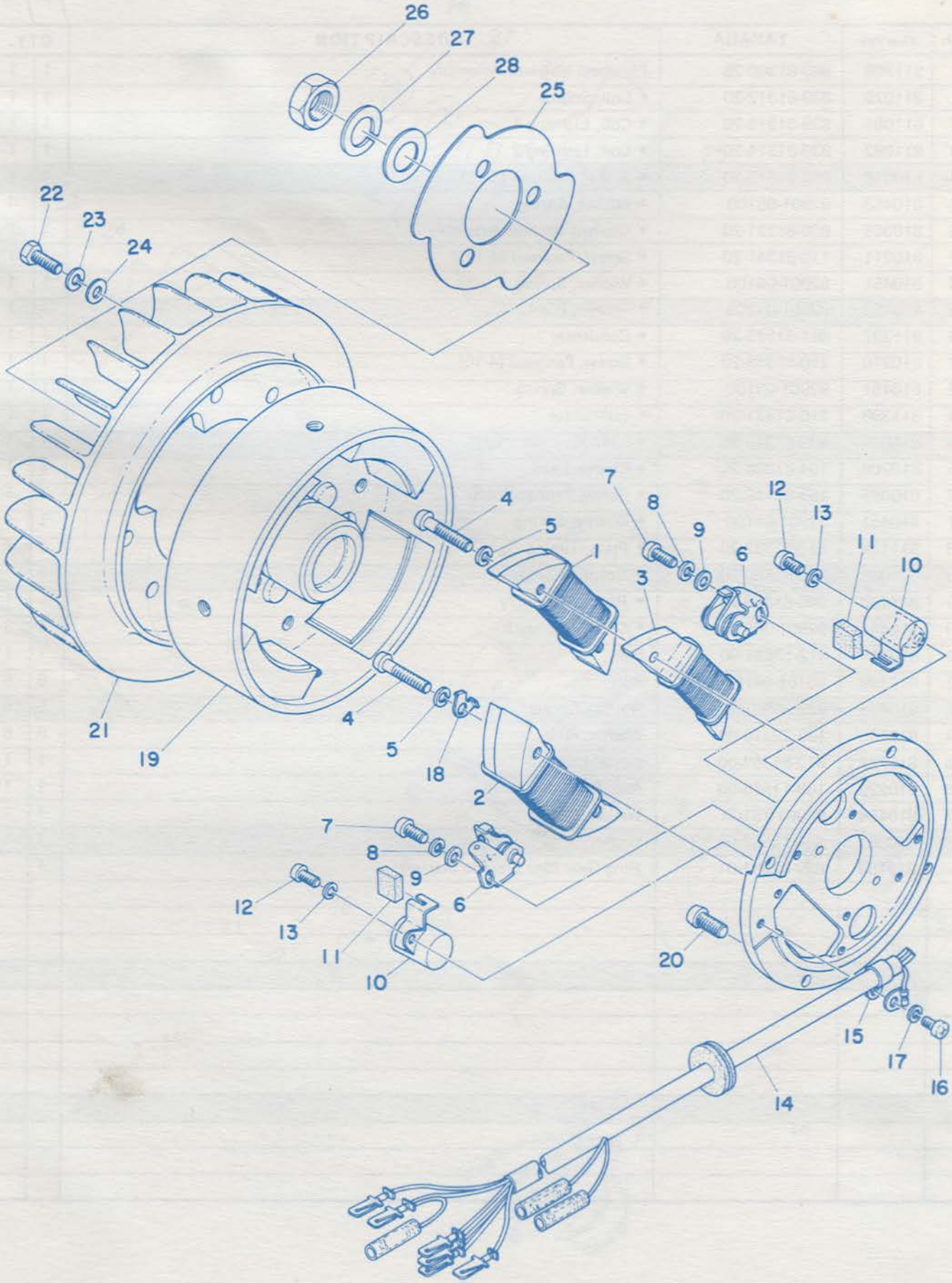

FLYWHEEL MAGNETO

NO.	SnoJet	YAMAHA	DESCRIPTION	Y 338	S 338	Y 433	S 433
				QUANTITY			
–	811407	859-81300-25	Flywheel Magneto Assembly	1	1		1
–	811113	838-81300-25	Flywheel Magneto Assembly			1	
1	811114	830-81312-20	• Coil Source	1	1	1	1
2	811115	838-81313-20	• Coil, Lighting 1	1	1	1	1
3	811116	838-81314-20	• Coil, Lighting 2	1	1	1	1
4	810319	802-81345-20	• Screw, Panhead (5-25)	4	4	4	4
5	810453	92901-05100	• Washer, Spring	4	4	4	4
6	810365	806-81321-20	• Contact Braker Assembly	2	2	2	2
7	810211	110-81347-20	• Screw, Panhead (4-12)	2	2	2	2
8	810451	92901-04100	• Washer, Spring	2	2	2	2
9	810452	92901-04200	• Washer, Plain	2	2	2	2
10	811397	861-81325-20	• Condenser	2	2		2
10	810315	802-81325-20	• Condenser			2	
11	811398	116-81331-20	• Lubricator	2	2		2
11	810213	120-81331-20	• Lubricator			2	
12	810210	110-81346-20	• Screw, Panhead (4-10)	2	2	2	2
13	810451	92901-04100	• Washer, Spring	2	2	2	2
14	811118	838-81315-25	• Lead Wire Assembly	1	1	1	1
15	810208	104-81328-20	• Clamp Head	1	1	1	1
16	811085	165-81145-21	• Screw, Panhead (4-8)	1	1	1	1
17	810451	92901-04100	• Washer, Spring	1	1	1	1
18	811119	812-81332-20	• Plate, Timing	1	1	1	1
19	811120	838-81350-20	• Rotor Assembly	1	1	1	1
20	810441	92501-06015	Screw Panhead	4	4	4	4
21	811121	838-12611-00	Fan	1	1	1	1
22	811399	90101-06127	Bolt	6	6	6	6
23	810461	92901-06100	Washer, Spring	6	6	6	6
24	810455	136-22316-00	Washer, Plain	6	6	6	
24	811469	136-23316-00	Washer, Plain				6
25	810722	812-81362-00	Cover, Hole	1	1	1	1
26	810279	168-11555-00	Nut, Crank Shaft	1	1	1	1
27	810454	92901-16100	Washer, Spring	1	1	1	1
28	810381	807-11557-00	Washer, 1	1	1	1	1
–	810183	839-81891-01	Ring Gear (See Electric Starter)	1		1	

STARTER
Y 292 – S 292

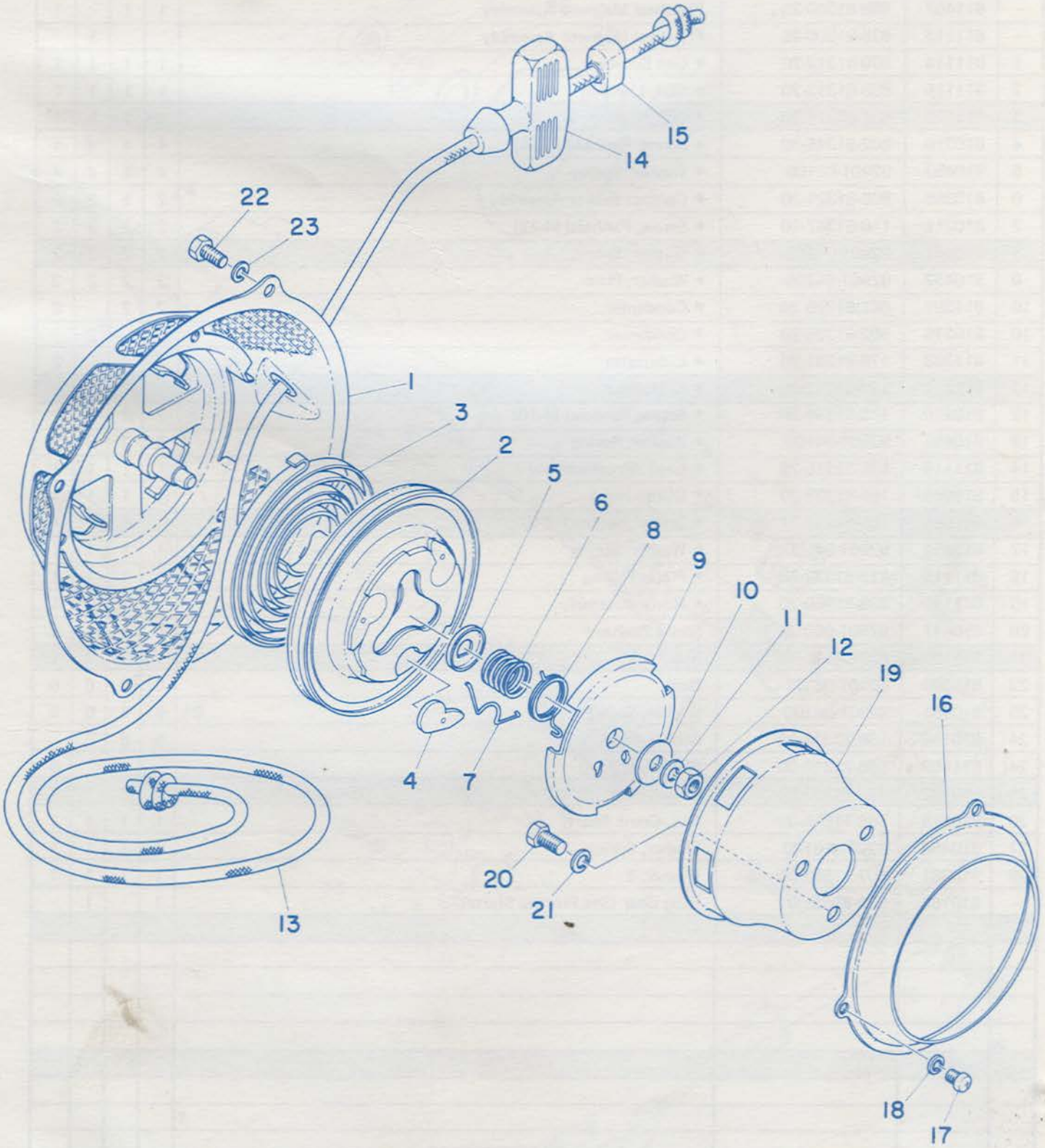

STARTER

NO.	Sno-Jet	YAMAHA	DESCRIPTION	QTY. Y292	QTY. S292
–	811393	860-15710-00	Starter Assembly	1	1
1	811394	860-15711-00	• Case Starter	1	1
2	810677	812-15714-00	• Drum, Sheave	1	1
3	810288	802-15713-00	• Spring, Starter	1	1
4	810679	812-15741-00	• Pawl, Drive	3	3
5	810414	802-15719-00	• Washer, Thrust	1	1
6	811078	807-15715-00	• Spring, Drive Plate	1	1
7	810682	812-15784-00	• Spring, Return	3	3
8	810683	811-15734-00	• Spring, Return	1	1
9	810684	812-15716-00	• Plate, Drive	1	1
10	810416	807-15726-01	• Washer, Flat	1	1
11	810456	92901-08100	• Washer, Spring	1	1
12	810508	98801-08300	• Nut	1	1
13	811395	812-15751-00	• Rope	1	1
14	810247	807-15755-00	• Handle Starter	1	1
15	810248	619-15756-00	• Connector	1	1
16	810691	812-15782-00	• Cover, Sheave	1	1
17	810156	98401-05006	• Screw, Roundhead	3	3
18	810453	92901-05100	• Washer, Spring	3	3
19	810694	812-15723-00	Pulley Starter	1	1
20	810494	97101-08015	Bolt	3	3
21	810456	92901-08100	Washer, Spring	3	3
22	810431	91206-06015	Bolt	4	4
23	810454	92906-06100	Washer, Spring	4	4

STARTER

Y & S 338 – Y & S 433

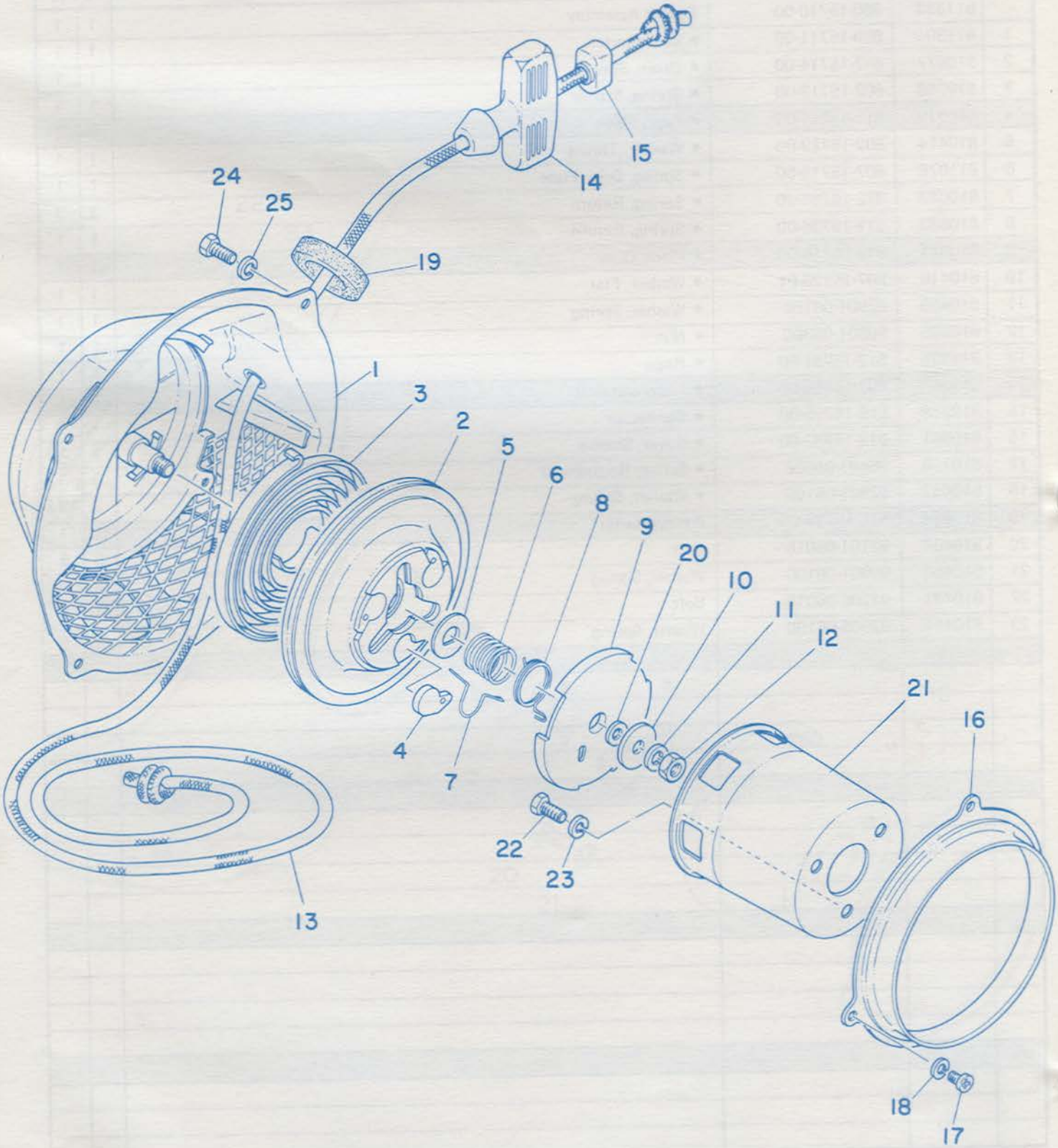

STARTER

NO.	SnoJet	YAMAHA	DESCRIPTION	QUANTITY Y 338	S 338	Y 433	S 433
–	810824	821-15710-00	Starter Assembly	1	1	1	1
1	810825	821-15711-00	• Case, Starter	1	1	1	1
2	810826	821-15714-00	• Drum Sheave	1	1	1	1
3	810827	811-15713-00	• Spring Starter	1	1	1	1
4	810828	811-15741-00	• Pawl, Drive	3	3	3	3
5	810294	802-15726-00	• Washer, Thrust	1	1	1	1
6	811078	626-15715-01	• Spring Drive Plate	1	1	1	1
7	810830	811-15784-00	• Spring, Return	3	3	3	3
8	810683	811-15734-00	• Spring, Return	1	1	1	1
9	810831	811-15716-00	• Plate, Drive	1	1	1	1
10	810416	807-15726-01	• Washer, Flat	1	1	1	1
11	810456	92901-08100	• Washer, Spring	1	1	1	1
12	810508	98801-08300	• Nut	1	1	1	1
13	810297	807-15751-00	• Rope	1	1	1	1
14	810247	807-15755-00	• Handle, Starter	1	1	1	1
15	810248	619-15756-00	• Connector	1	1	1	1
16	810832	811-15782-00	• Cover, Sheave	1	1	1	1
17	810498	98501-05008	• Screw, Panhead	3	3	3	3
18	810453	92901-05100	• Washer, Spring	3	3	3	3
19	810122	811-15775-00	• Knob, Stopper Ring	1	1	1	1
20	810121	811-15722-00	• Shim Drive Plate (8.0 - 11.5 - 0.6)	1	1	1	1
21	810833	811-15723-00	Pulley Starter	1	1	1	1
22	810494	97201-08015	Bolt	3	3	3	3
23	810456	92901-08100	Washer, Spring	3	3	3	3
24	810431	91206-06015	Bolt	4	4	4	4
25	810454	92906-06100	Washer, Spring	4	4	4	4

DECOMPRESSOR
Y 292

DECOMPRESSOR

NO.	SnoJet	YAMAHA	DESCRIPTION	QTY. Y292	QTY. S292
1	811073	822-12281-00	Valve, Decompression	1	
2	810619	93210-04092	O-Ring (1.0 - 3.7)	1	
3	810190	812-11198-00	Gasket	1	
4	811074	822-12283-00	Bracket, Decompression	1	
5	810629	812-12273-00	Holder, Wire	1	
6	811075	275-12282-00	Lever, Decompression	1	
7	810643	812-12287-00	Spring, Decompression	1	
8	810644	812-12284-00	Pin, Decompression Lever	1	
9	811076	91401-16008	Pin, Cotter	1	
10	811401	839-12270-00	Decompression, Switch Assembly	1	
11	811410	839-12292-00	• Wire, Decompression.		

DISCONTINUED

ELECTRICAL

Y & S 292

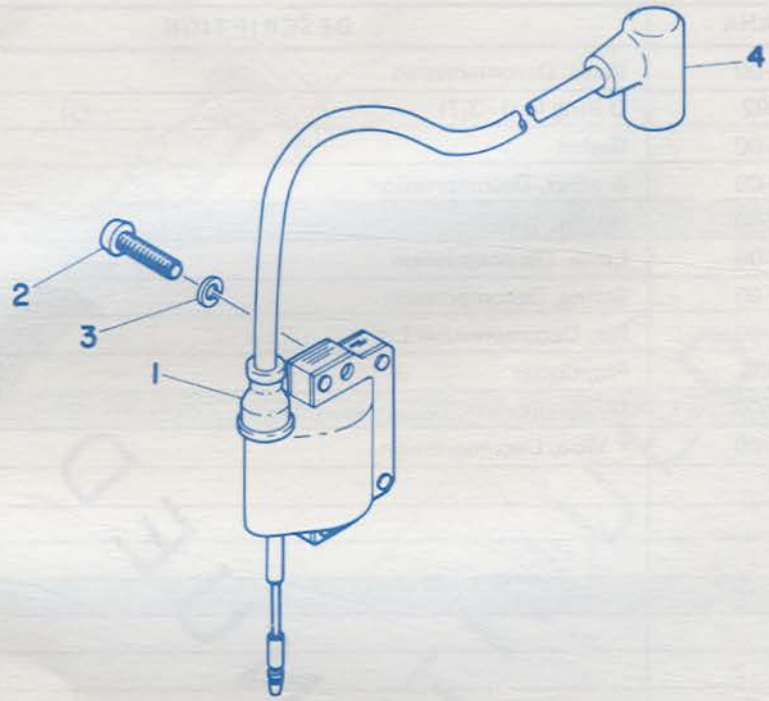

Y & S 338 – Y & S 433

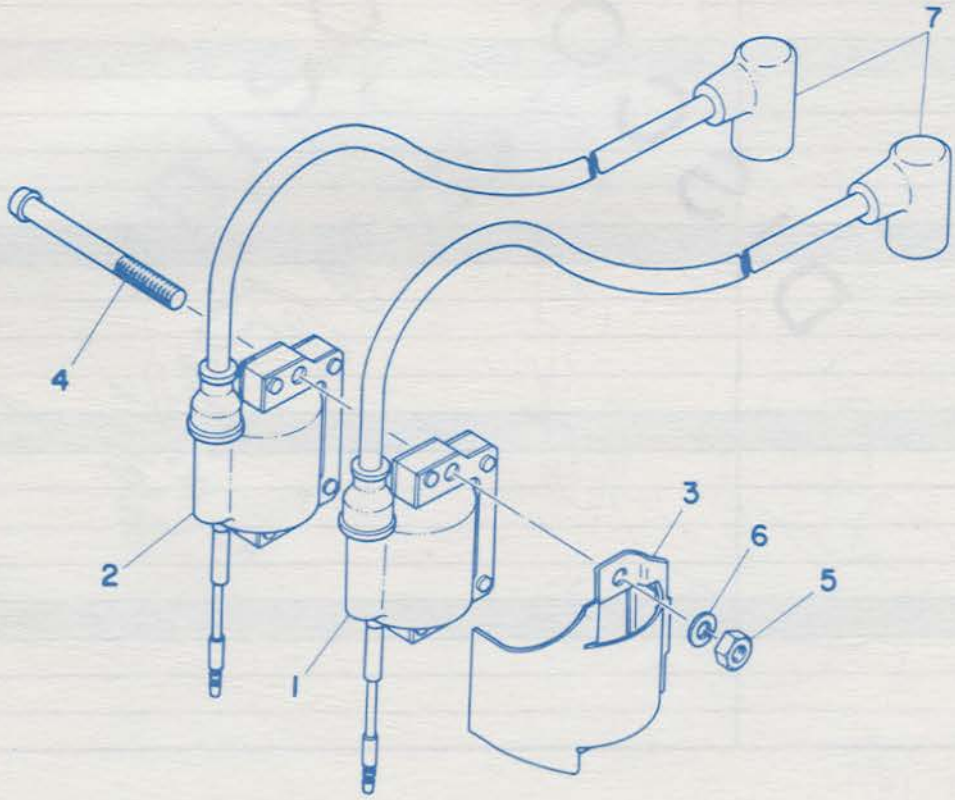

ELECTRICAL

NO.	Sno-Jet	YAMAHA	DESCRIPTION	QUANTITY Y 292	S 292	Y 338	S 338	Y 433	S 433
1	811400	860-82310-40	Ignition Coil Assembly	1	1				
2	810443	92506-06025	Screw Panhead	2	2				
3	810416	92906-06100	Washer, Spring	2	2				
4	811089	838-82370-00	Plug, Cap Assembly	1	1				
1	811123	838-82310-40	Ignition Coil Assembly			1	1	1	1
2	811124	838-82320-40	Ignition Coil Assembly			1	1	1	1
3	811088	838-82314-00	Cover, Ignition Coil			1		1	
3	811444	865-82314-01	Cover, Ignition Coil				1		1
4	811125	92506-06070	Screw, Panhead			2	2	2	2
5	811126	92806-06100	Nut			2		2	
5	811445	98806-06100	Nut				2		2
6	810454	92906-06100	Washer, Spring			2	2	2	2
7	811089	838-82370-00	Plug, Cap Assembly			2	2	2	2

ELECTRIC STARTER
Y 292 – Y 338 – Y 433

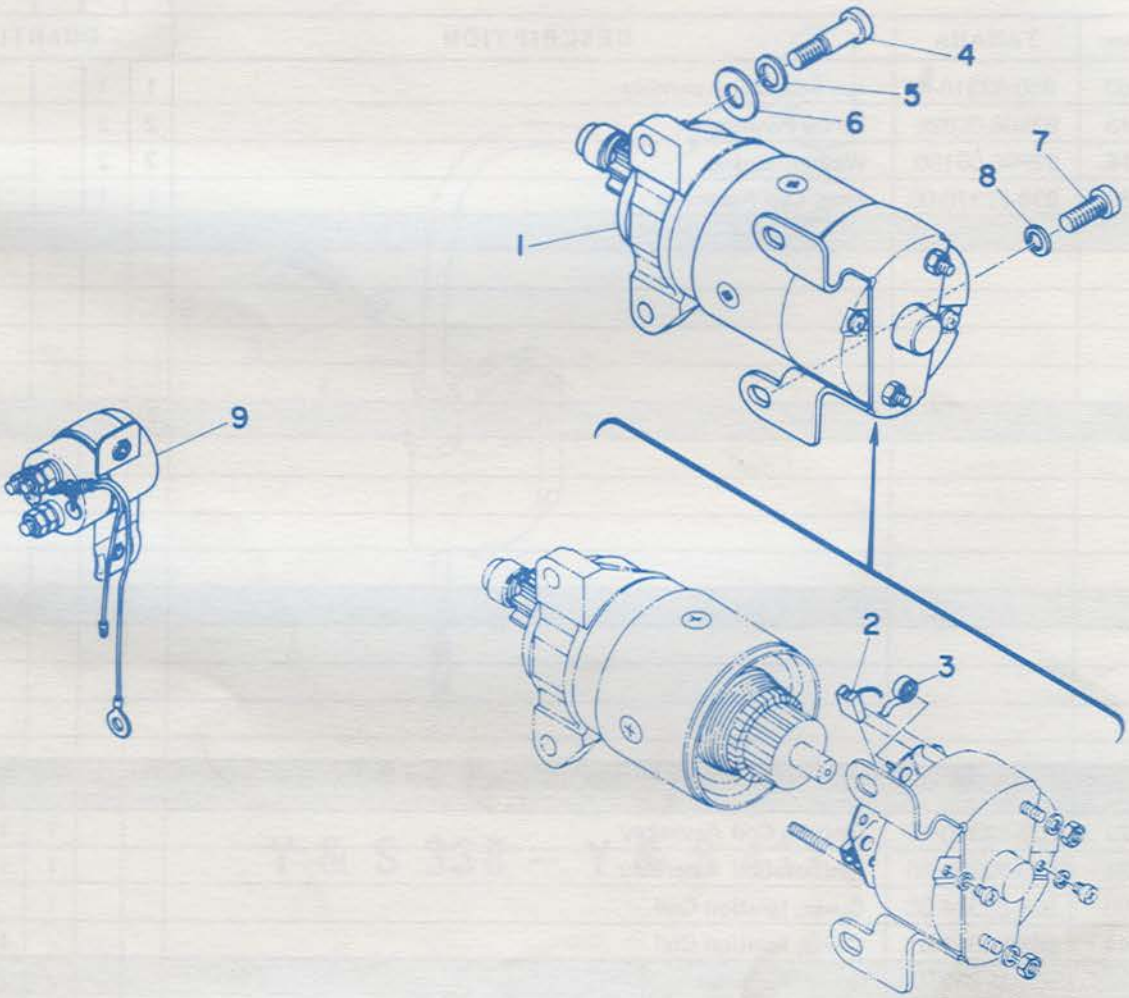

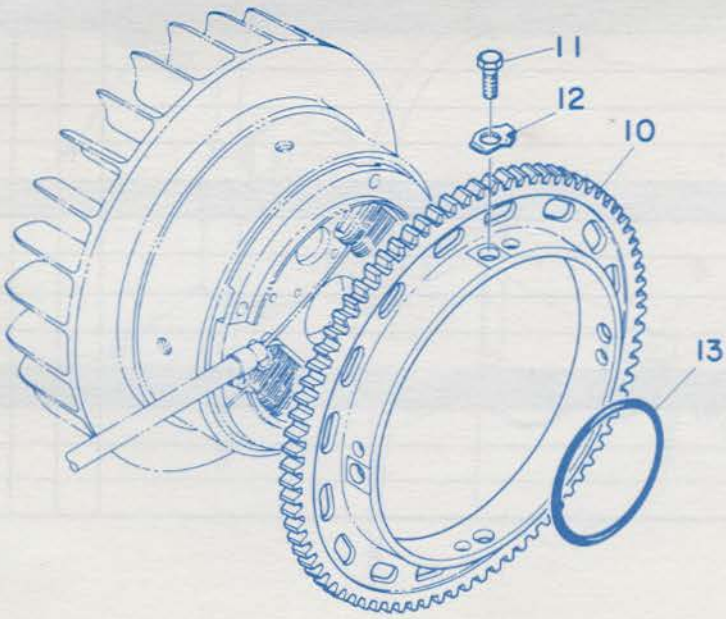

ELECTRIC STARTER

NO.	SnoJet	YAMAHA	DESCRIPTION	Y 292	S 292	Y 338	S 338	Y 433	S 433
				QUANTITY					
1	040391	842-81800-20	Electric Motor Assembly	1		1		1	
2	811227	842-81811-20	• Brush 1	4		4		4	
3	811229	842-81813-20	• Spring, Brush	4		4		4	
4	810095	806-77481-00	Bolt	2		2		2	
5	080015	92901-10100	Washer, Spring	2		2		2	
6	810552	806-77471-00	Washer, Special	1		1		1	
7	810096	92501-08020	Screw, Panhead	2		2		2	
8	810456	92901-08100	Washer, Spring	2		2		2	
9	811145	842-81940-20	Starter, Switch Assembly	1		1		1	
10	810183	839-81891-01	Gear, Ring	1		1		1	
11	810181	839-81892-00	Bolt	4		4		4	
12	810182	839-81893-01	Washer, Special	4		4		4	
13	810522	93210-61117	O-Ring (2.2 - 61.0)	1		1		1	

INTAKE-EXHAUST
Y 292

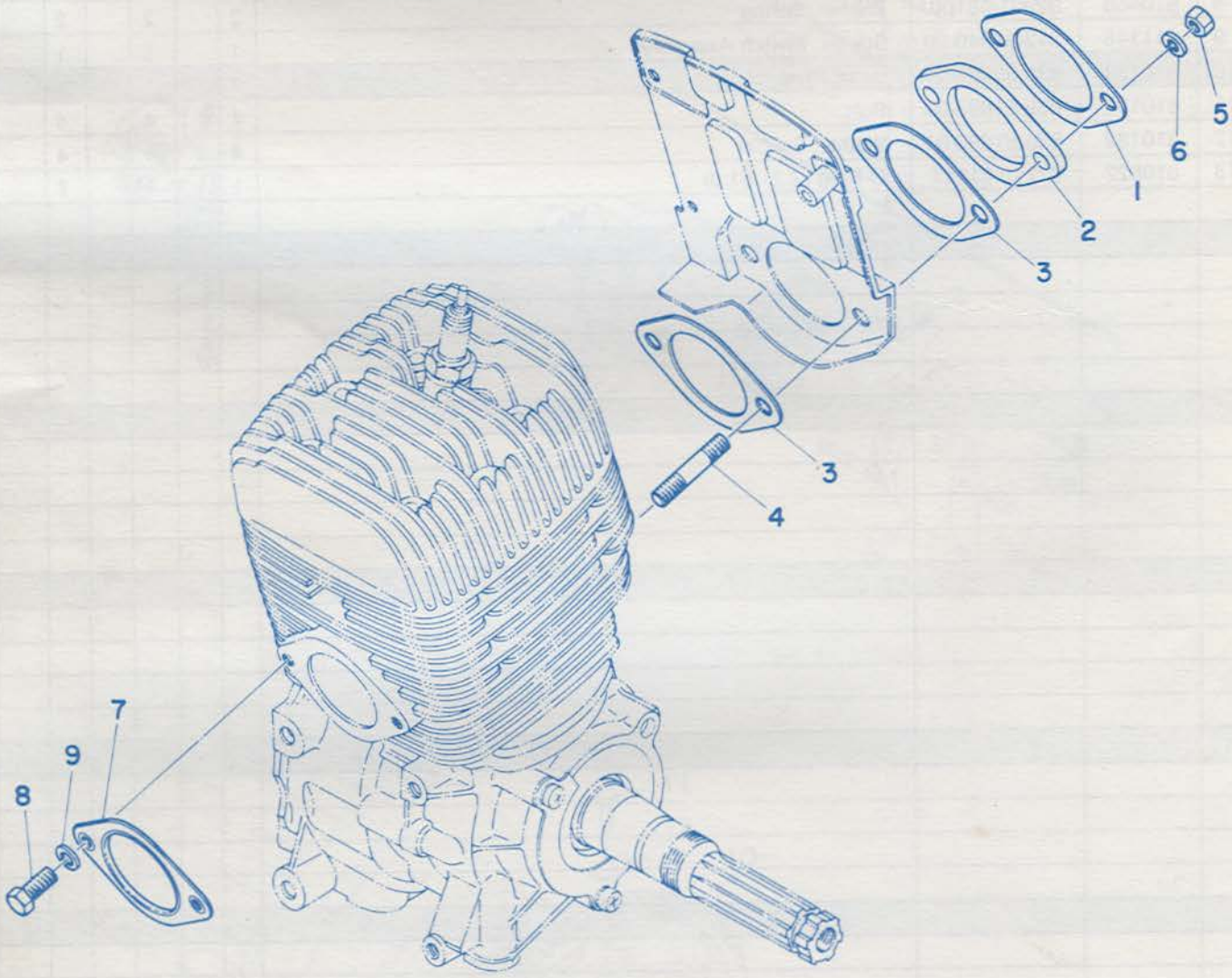

INTAKE/EXHAUST

NO.	SNO-JET	YAMAHA	DESCRIPTION	QTY. Y292	QTY. S292
1	790334	810-13556-00	Gasket	1	
2	810078	812-13555-09	Joint	1	
3	811072	839-13556-00	Gasket	2	
4	811391	90116-08048	Stud	2	
5	810508	98801-08300	Nut	2	
6	810456	92901-08100	Washer, Spring	2	
7	810084	812-14613-01	Gasket, Exhaust	1	
8	810085	97101-08020	Bolt	2	
9	810456	92901-08100	Washer, Spring	2	

INTAKE-EXHAUST
S 292

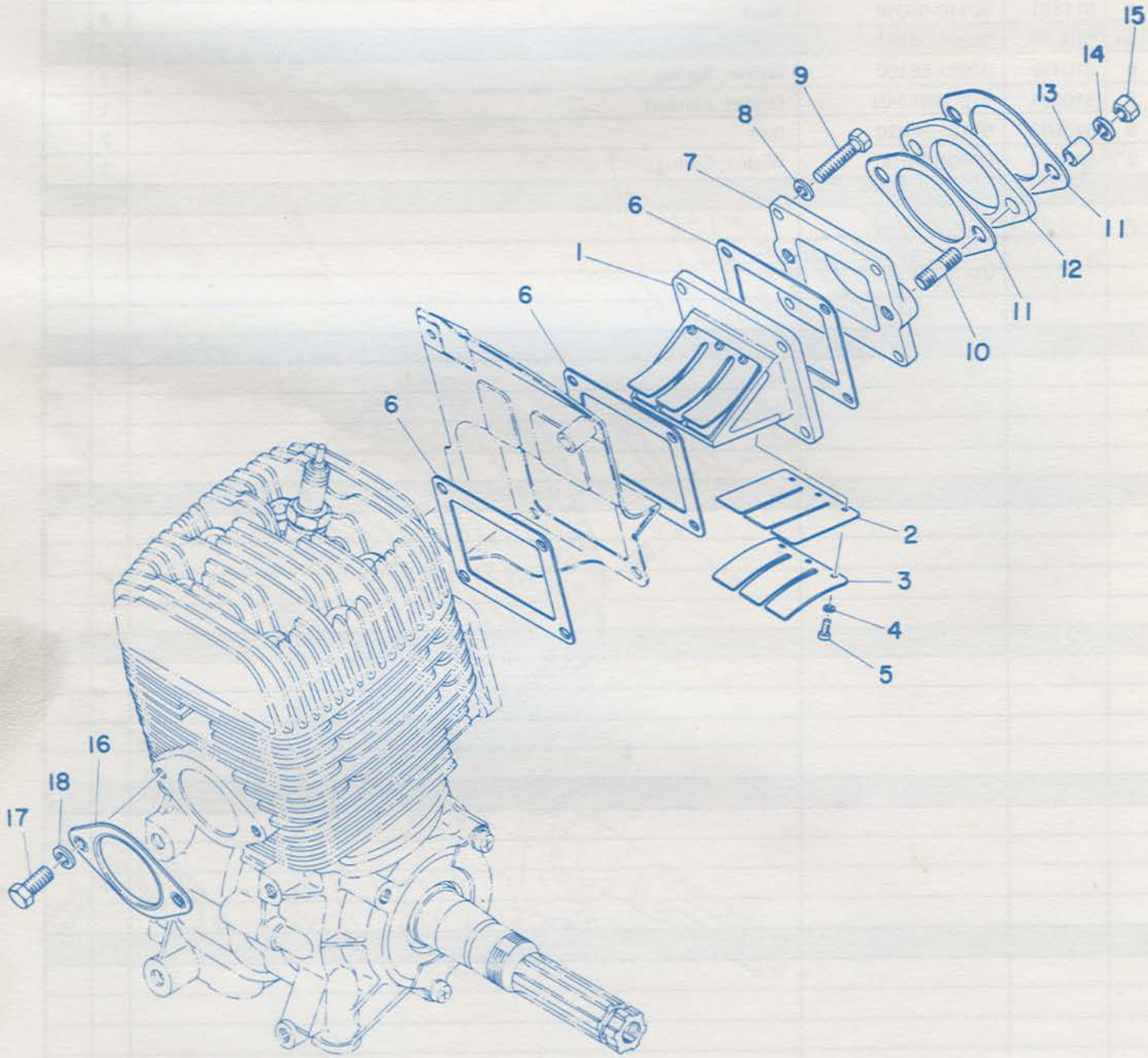

INTAKE/EXHAUST

NO.	SnoJet	YAMAHA	DESCRIPTION	QTY. Y292	QTY. S292
1	811470	363-13610-00	Reed Valve Assembly		1
2	811423	363-13613-00	• Valve, Reed		2
3	811424	363-13616-00	• Stopper, Reed Valve		2
4	810840	92901-03100	• Washer, Spring		6
5	811425	98512-03008	• Screw, Panhead		6
6	811426	363-13621-00	Packing, Valve Seat		3
7	811427	864-13565-09	Joint		1
8	810454	92901-06100	Washer, Spring		4
9	811428	97211-06030	Bolt		4
10	811429	90116-08162	Stud		2
11	810079	812-13556-70	Gasket		2
12	811430	835-13585-00	Joint 2		1
13	810045	810-13576-00	Spacer		2
14	810456	92901-08100	Washer, Spring		2
15	810508	98801-08300	Nut		2
16	810084	812-14613-01	Gasket, Exhaust		1
17	810085	97101-08020	Bolt		2
18	810456	92901-08100	Washer, Spring		2

INTAKE/EXHAUST
Y 338 – S 338 – Y 433

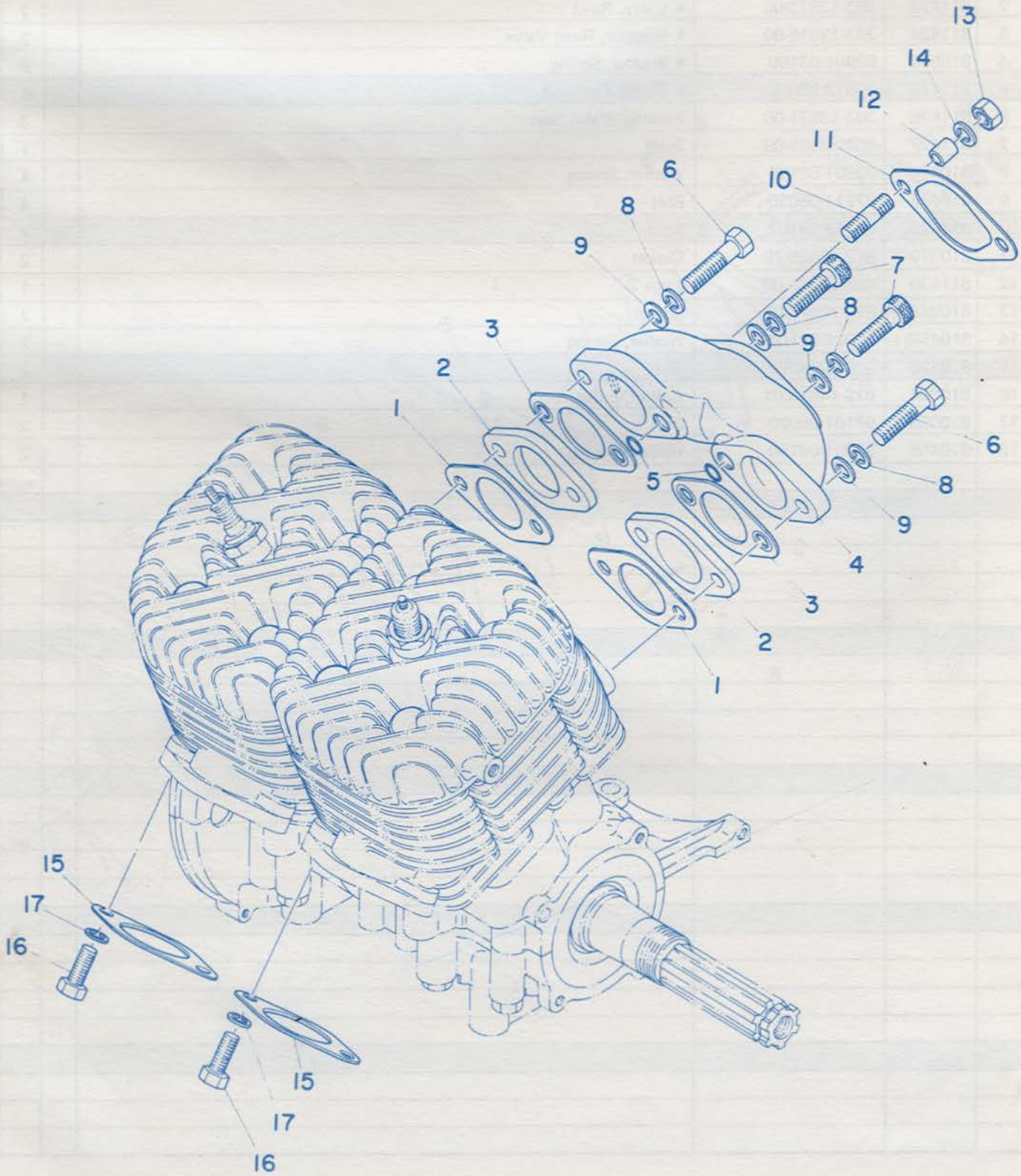

INTAKE/EXHAUST

NO.	Sno-Jet	YAMAHA	DESCRIPTION	QUANTITY Y 338	S 338	Y 433	S 433
1	810080	810-13556-00	Gasket 1	2	2		
1	810042	811-13556-00	Gasket 2			2	
2	810030	807-13555-09	Joint	2	2		
2	810041	811-13555-00	Joint			2	
3	810905	810-13563-00	Gasket	2	2		
3	810903	811-13563-00	Gasket			2	
4	810031	810-13565-00	Joint, Manifold	1	1		
4	810034	811-13565-00	Joint, Manifold			1	
5	810044	93210-07003	O-Ring (1.9 - 6.8)	2	2	2	
6	810091	97101-08035	Bolt	2	2	2	
7	810098	91318-08030	Bolt	2	2	2	
8	810456	92901-08100	Washer, Spring	4	4	4	
9	810457	92901-08200	Washer, Plain	4	4	4	
10	810093	802-13558-00	Stud	2	2	2	
11	790334	810-13566-00	Gasket 3	1	1	1	
12	810045	810-13676-00	Spacer	2	2	2	
13	810508	98801-08300	Nut	2	2	2	
14	810456	92901-08100	Washer, Spring	2	2	2	
15	810404	807-14613-00	Gasket, Exhaust	2	2	2	
16	810345	806-14651-00	Bolt, Exhaust Hold	4	4	4	
17	810456	92901-08100	Washer, Spring	4	4	4	

INTAKE/EXHAUST

NO.	Jno'Jet	YAMAHA	DESCRIPTION	QTY. Y433	QTY. S433
1	811458	311-13610-00	Reed Valve Assembly		2
2	811459	311-13613-00	• Valve Reed		4
3	811460	311-13616-00	• Stopper, Valve		4
4	810840	92901-03100	• Washer, Spring		8
5	811425	98512-03008	• Screw, Panhead		8
6	811461	311-13621-00	Packing, Valve Seat		2
7	811462	866-13563-00	Gasket		2
8	811463	866-13585-00	Joint		2
9	811464	97101-06025	Bolt		8
10	810454	92901-06100	Washer, Spring		8
11	811465	866-13556-00	Gasket		4
12	811466	866-13555-00	Joint		2
13	811467	866-13565-09	Joint, Manifold		1
14	810044	93210-07003	O-Ring (1.9 - 6.8)		2
15	810061	97101-08030	Bolt		2
16	811471	91308-08025	Bolt		2
17	810456	92901-08100	Washer, Spring		4
18	810457	92901-08200	Washer, Plain		4
19	810093	802-13558-00	Stud		2
20	811468	834-13566-00	Gasket 3		1
21	810045	810-13576-00	Spacer		2
22	810508	98801-08300	Nut		2
23	810456	92901-08100	Washer, Spring		2
24	810404	807-14613-00	Gasket, Exhaust		2
25	810365	806-14651-00	Bolt, Exhaust Hold		4
26	810456	92901-08100	Washer, Spring		4

MEMO

YAMAHA

SX 338 & 433 c.

CRANK & PISTON
SX 338 & 433

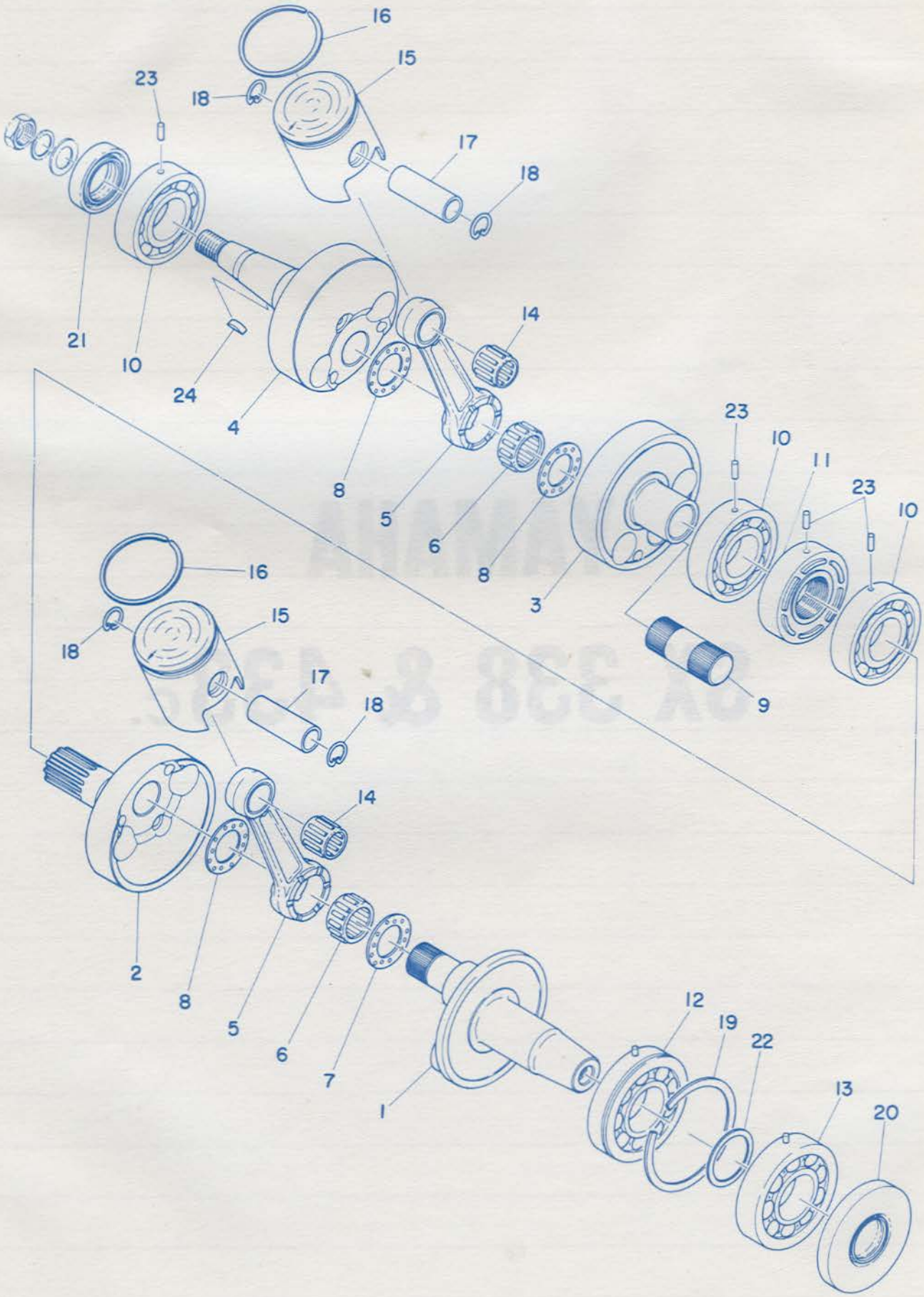

CRANK-PISTON

NO.	Sno'Jet	YAMAHA	DESCRIPTION	QTY. SX338	QTY. SX433
–	811485	818-11400-00	Crank Assembly	1	1
1	811486	878-11412-00	• Crank 1, Left	1	1
2	811487	878-11422-00	• Crank 1, Right	1	1
3	811488	878-11432-00	• Crank 2, Left	1	1
4	811489	878-11442-00	• Crank 2, Right	1	1
5	810242	838-11651-00	• Rod, Connecting	2	2
6	810481	93310-42434	• Bearing, Connecting Rod, Big End	2	2
7	811546	878-11685-01	• Washer, Crank Pin	1	1
8	810218	152-11685-00	• Washer, Crank Pin	3	3
9	811491	878-11681-00	• Pin, Crank	1	1
10	811494	93306-20610	• Bearing (B-6206 Special)	3	3
11	810228	168-11515-00	• Seal, Labyrinth	1	1
12	811492	93306-30612	• Bearing (B-6306 Special)	1	1
13	811493	93306-30613	• Bearing (B-6306 Special)	1	1
14	811495	93310-21874	Bearing, Connecting Rod, Small End	2	2
15	811496	878-11631-01-96	Piston (59.96 mm Std.)	2	
15	811540	879-11631-00-96	Piston (67.96 mm Std.)		2
15	811497	878-11631-01-97	Piston (59.97 mm Std.)	2	
15	811541	878-11631-00-97	Piston (67.97 mm Std.)		2
15	811498	878-11631-01-98	Piston (59.98 mm Std.)	2	
15	811542	879-11631-00-98	Piston (67.98 mm Std.)		2
15	811499	878-11635-01	Piston (60.25 mm 1st O.S)	2	
15	811543	879-11635-00	Piston (68.25 mm 1st O.S)		2
15	811500	878-11636-01	Piston (60.50 mm 2nd O.S)	2	
15	811544	879-11636-00	Piston (68.50 mm 2nd O.S)		2
16	811501	878-11611-00	Ring, Piston (Std.)	2	
16	811048	820-11611-00	Ring, Piston (Std.)		2
16	811502	878-11611-10	Ring, Piston (1st O.S)	2	
16	811049	820-11611-10	Ring, Piston (1st O.S)		2
16	811503	878-11611-20	Ring, Piston (2nd O.S)	2	
16	811050	820-11611-20	Ring, Piston (2nd O.S)		2
17	810233	168-11633-00	Pin, Piston	2	
17	810579	818-11633-00	Pin, Piston		2
18	810245	604-11634-00	Clip, Piston Pin	4	4
19	810484	93440-78011	Circlip (78 Dia. Special)	1	1
20	811504	93103-32090	Oil Seal (SW-32-78-9.5)	1	1
21	810475	93103-32055	Oil Seal (SW-32-48-10)	1	1
22	811505	806-47527-00	Washer	1	1
23	810485	93604-12037	Pin, Dowel (4-12)	4	4
24	811110	322-11545-00	Key, Woodruff	1	1

CRANKCASE - CYLINDER
SX 338 & 433

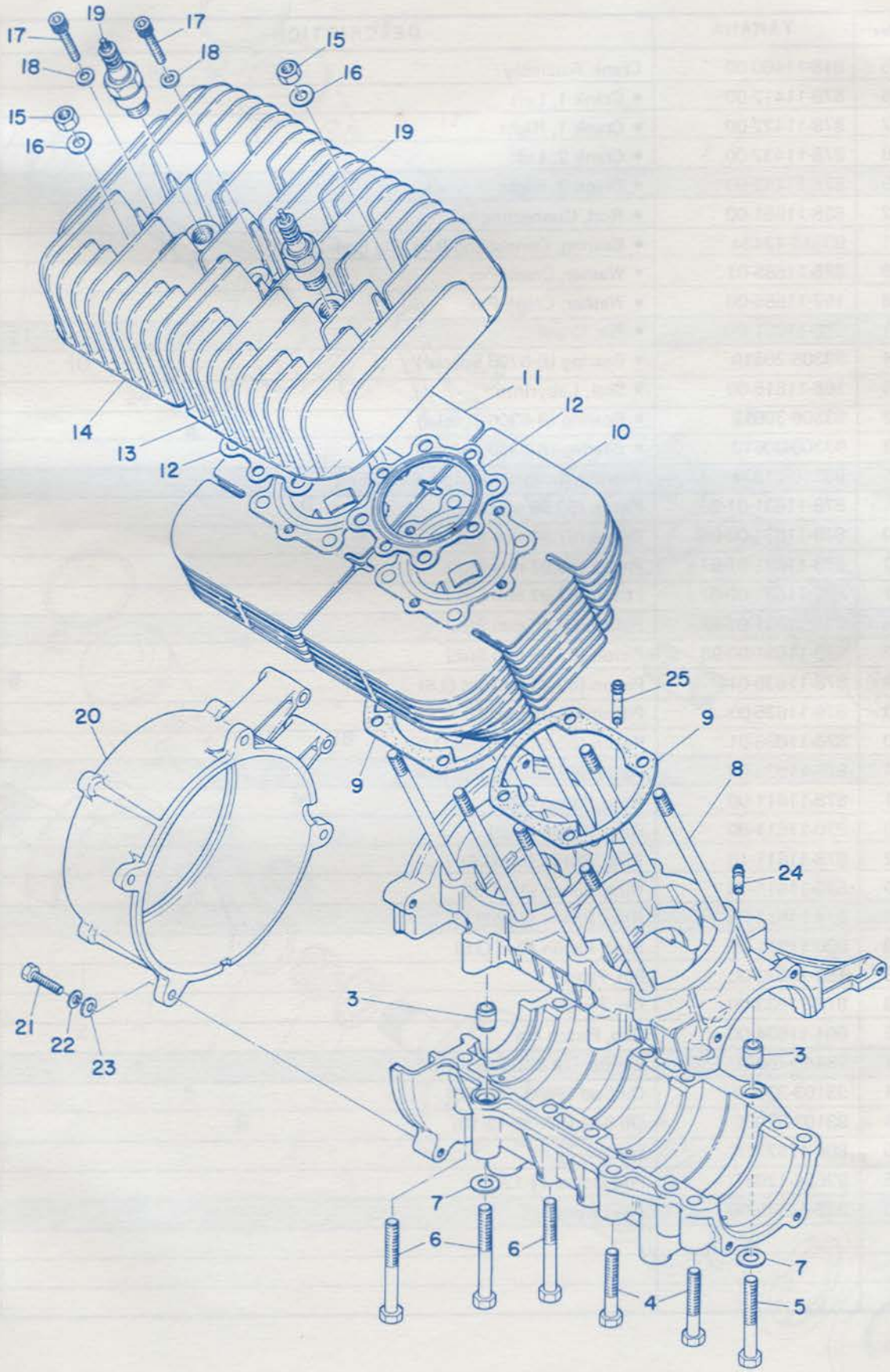

CRANKCASE-CYLINDER

NO.	Sno'Jet	YAMAHA	DESCRIPTION	QTY. SX338	QTY. SX433
–	811473	878-15100-00	Crankcase Assembly	1	
–	811533	879-15100-00	Crankcase Assembly		1
3	811408	91810-05016	• Pin, Dowel (8.4 - 12 - 16)	2	2
4	810879	97101-08050	Bolt	6	6
5	810490	97101-08060	Bolt	1	1
6	810491	97101-08070	Bolt	7	7
7	810457	92901-08200	Washer, Plain	2	2
8	810227	168-11361-00	Bolt, Cylinder Holding	8	8
9	811476	878-11351-00	Gasket, Cylinder	2	
9	811534	857-11351-00	Gasket, Cylinder		2
10	811477	878-11311-09	Cylinder, Left	1	
10	811535	879-11311-00	Cylinder, Left		1
11	811478	878-11321-09	Cylinder, Right	1	
11	811536	879-11321-00	Cylinder, Right		1
12	811479	878-11181-00	Gasket, Cylinder Head	2	
12	811537	879-11181-00	Gasket, Cylinder Head		2
13	811480	878-11111-01	Head, Cylinder Left	1	
13	811538	879-11111-01	Head, Cylinder Left		1
14	811481	878-11121-01	Head, Cylinder Right	1	
14	811539	879-11121-01	Head, Cylinder Right		1
15	811474	98801-08200	Nut	8	8
16	810457	92901-08200	Washer, Plain	8	8
17	811475	91318-08035	Bolt	8	8
18	810457	92901-08200	Washer, Plain	8	8
19	–	–	Plug	2	2
20	811483	878-15421-00	Cover, Crankcase	1	1
21	811484	97201-06025	Bolt (B-9EV)	4	4
22	810454	92901-06100	Washer, Spring	4	4
23	810455	92901-06200	Washer, Plain	4	4
24	810620	812-24461-00	Pipe, Joint	1	2
25	811452	866-24461-00	Pipe, Joint	1	

CDI MAGNETO
SX 338 & 433

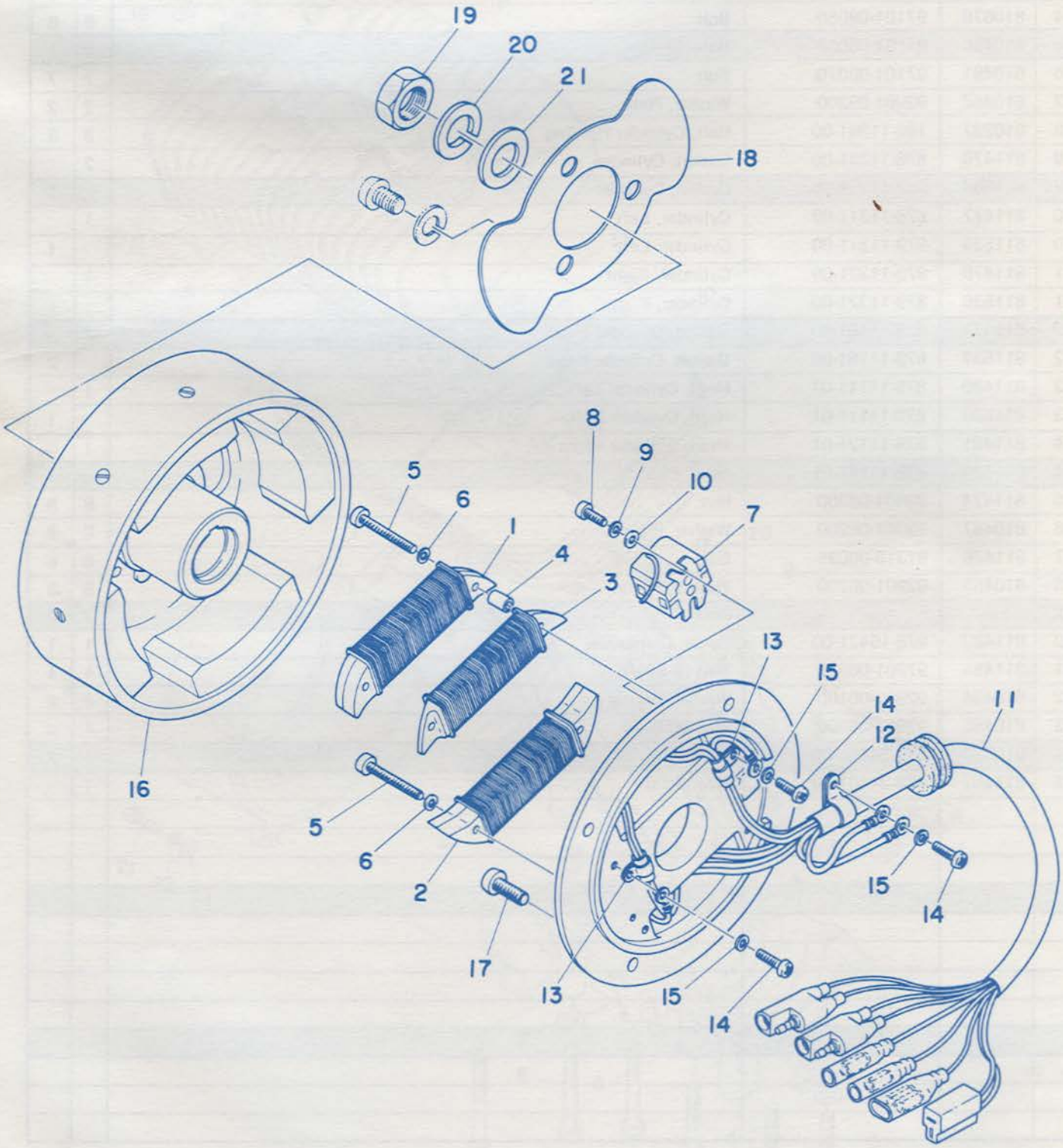

CDI MAGNETO

NO.	Sno-Jet	YAMAHA	DESCRIPTION	QTY. SX338	QTY. SX433
–	811526	878-85500-15	CDI Magneto Assembly	1	1
1	811550	878-85541-10	• Coil, Charge	1	1
2	811551	878-81313-10	• Coil, Lighting 1	1	1
3	811552	878-81314-10	• Coil, Lighting 2	1	1
4	811553	647-81318-10	• Spacer	2	2
5	811554	647-81324-10	• Screw, Panhead (5-30)	4	4
6	810453	92901-05100	• Washer, Spring	4	4
7	811556	878-85543-10	• Pulser	2	2
8	810210	110-81346-20	• Screw, Panhead (4-10)	4	4
9	810451	92901-04100	• Washer, Spring	4	4
10	810452	92901-04200	• Washer, Plain	4	4
11	811557	878-85515-15	• Lead Wire Assembly	1	1
12	811558	109-81328-10	• Clamp, Lead	1	1
13	811559	363-85528-10	• Clamp, Lead	2	2
14	811085	165-81145-21	• Screw, Panhead	3	3
15	810451	92901-04100	• Washer, Spring	3	3
16	811560	878-85550-10	• Rotor Assembly	1	1
17	810441	92501-06015	Screw Panhead	4	4
18	810722	812-81362-00	Cover Hole	1	1
19	811561	90170-16133	Nut, Crank Shaft	1	1
20	810461	92901-16100	Washer, Spring	1	1
21	810381	807-11557-00	Washer	1	1

STARTER
SX 338 & 433

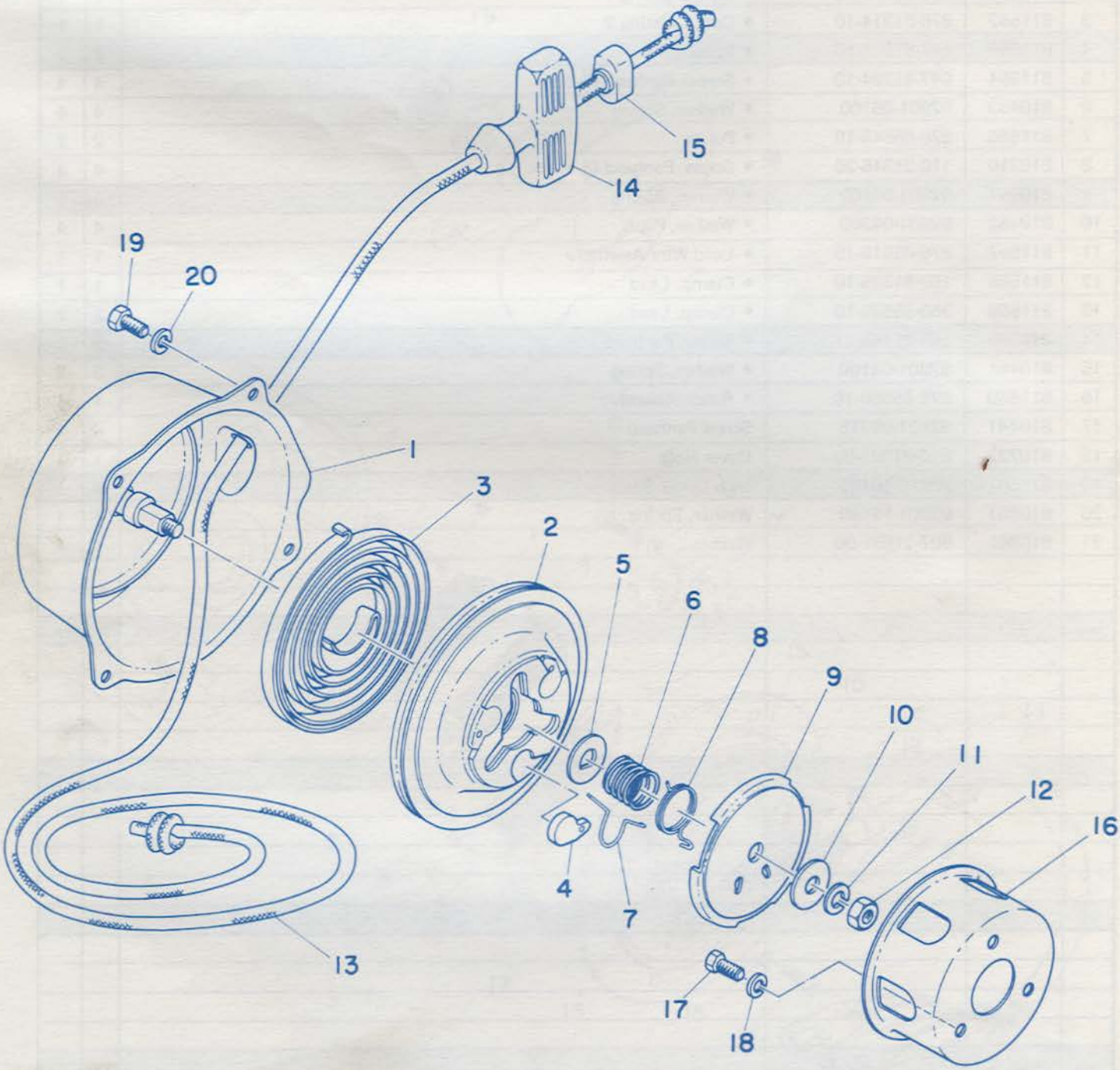

STARTER

NO.	Sno-Jet	YAMAHA	DESCRIPTION	QTY. SX338	QTY. SX433
–	811275	857-15710-02	Starter Assembly	1	1
1	811547	857-15711-00	• Case, Starter	1	1
2	811548	857-15714-00	• Drum, Sheave	1	1
3	810827	811-15713-00	• Spring, Sheave	1	1
4	810828	811-15741-00	• Pawl, Drive	3	3
5	810292	802-15719-00	• Washer, Thrust	1	1
6	811078	626-15715-01	• Spring, Drive Plate	1	1
7	810830	811-15784-00	• Spring, Return	3	3
8	810683	811-15734-00	• Spring, Return	1	1
9	810831	811-15716-00	• Plate, Drive	1	1
10	810685	807-15726-01	• Washer, Thrust	1	1
11	810456	92901-08100	• Washer, Spring	1	1
12	810508	98801-08300	• Nut	1	1
13	811549	856-15751-00	• Rope (L=1820)	1	1
14	810418	807-15755-00	• Handle	1	1
15	810690	619-15756-00	• Connector	1	1
16	811517	878-15723-00	Pulley, Starter	1	1
17	810494	97201-08015	Bolt	3	3
18	810456	92901-08100	Washer, Spring	3	3
19	810431	92201-06015	Bolt	4	4
20	810454	92901-06100	Washer, Spring	4	4

ELECTRICAL
SX 338 & 433

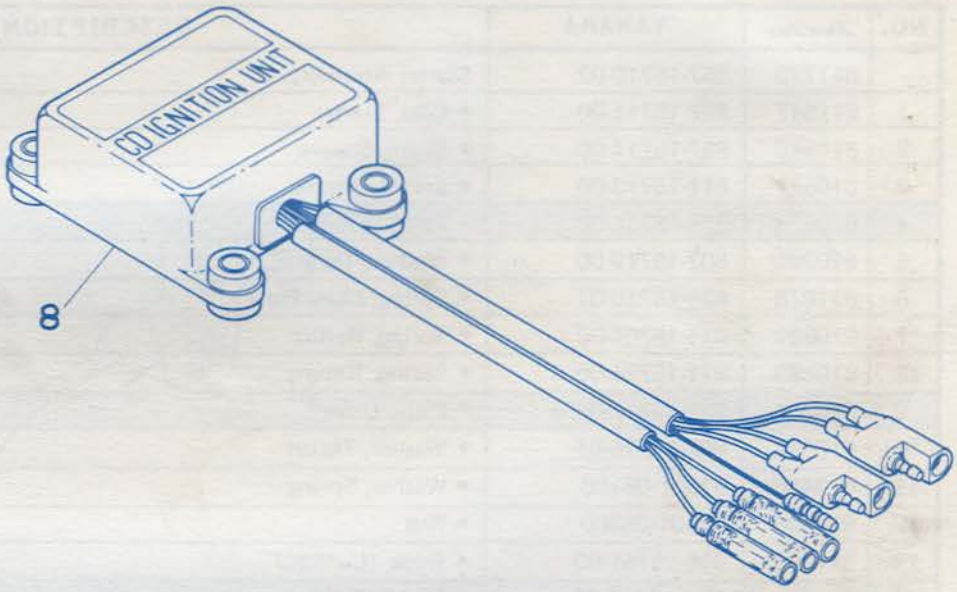

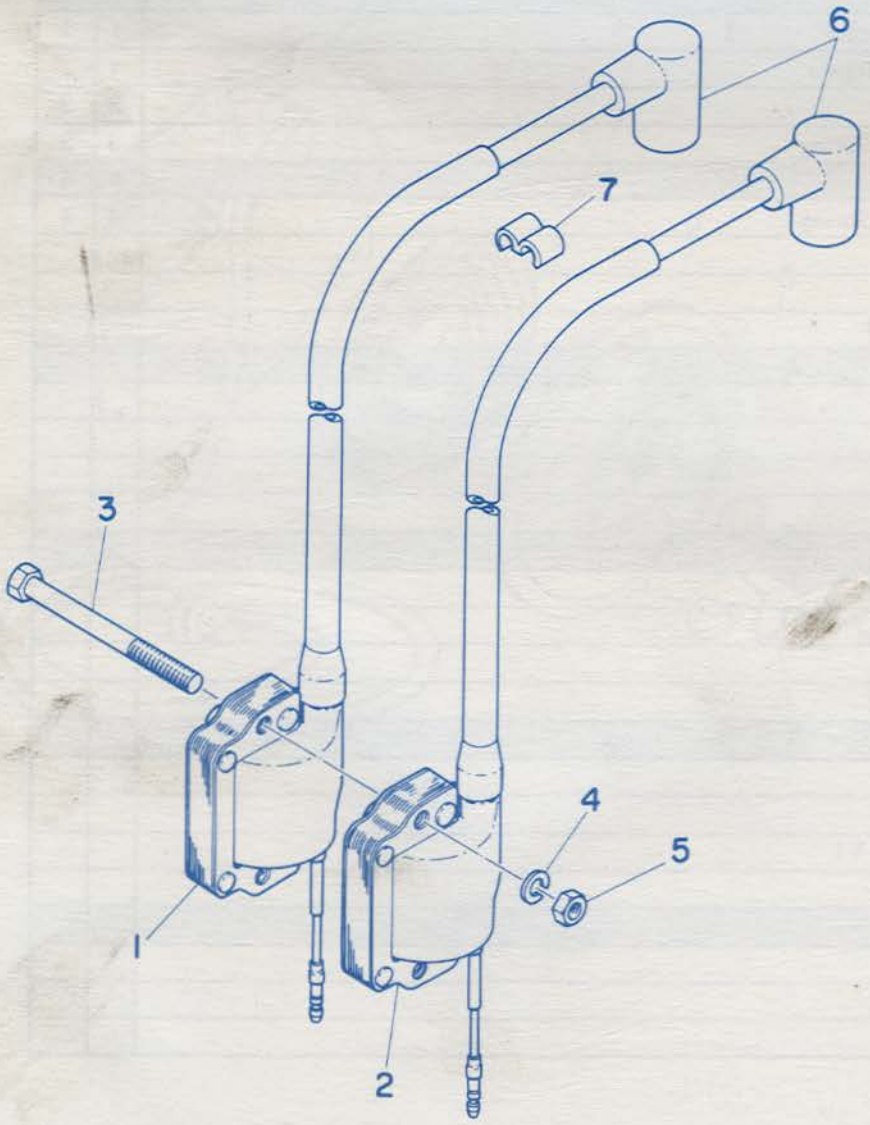

ELECTRICAL

NO.	SNO-JET	YAMAHA	DESCRIPTION	QTY. SX338	QTY. SX433
1	811528	878-82310-30	Ignition Coil Assembly 1	1	1
2	811279	857-82320-30	Ignition Coil Assembly 2	1	1
3	811529	91201-06070	Bolt	2	2
4	810454	92901-06100	Washer, Spring	2	2
5	811530	98801-06100	Nut	2	2
6	811089	838-82370-00	Plug Cap Assembly	2	2
7	811531	878-82314-00	Clamp, Cord	1	1
8	811527	878-85540-00	CDI., Unit Assembly	1	1

INTAKE-EXHAUST
SX 338 & 433

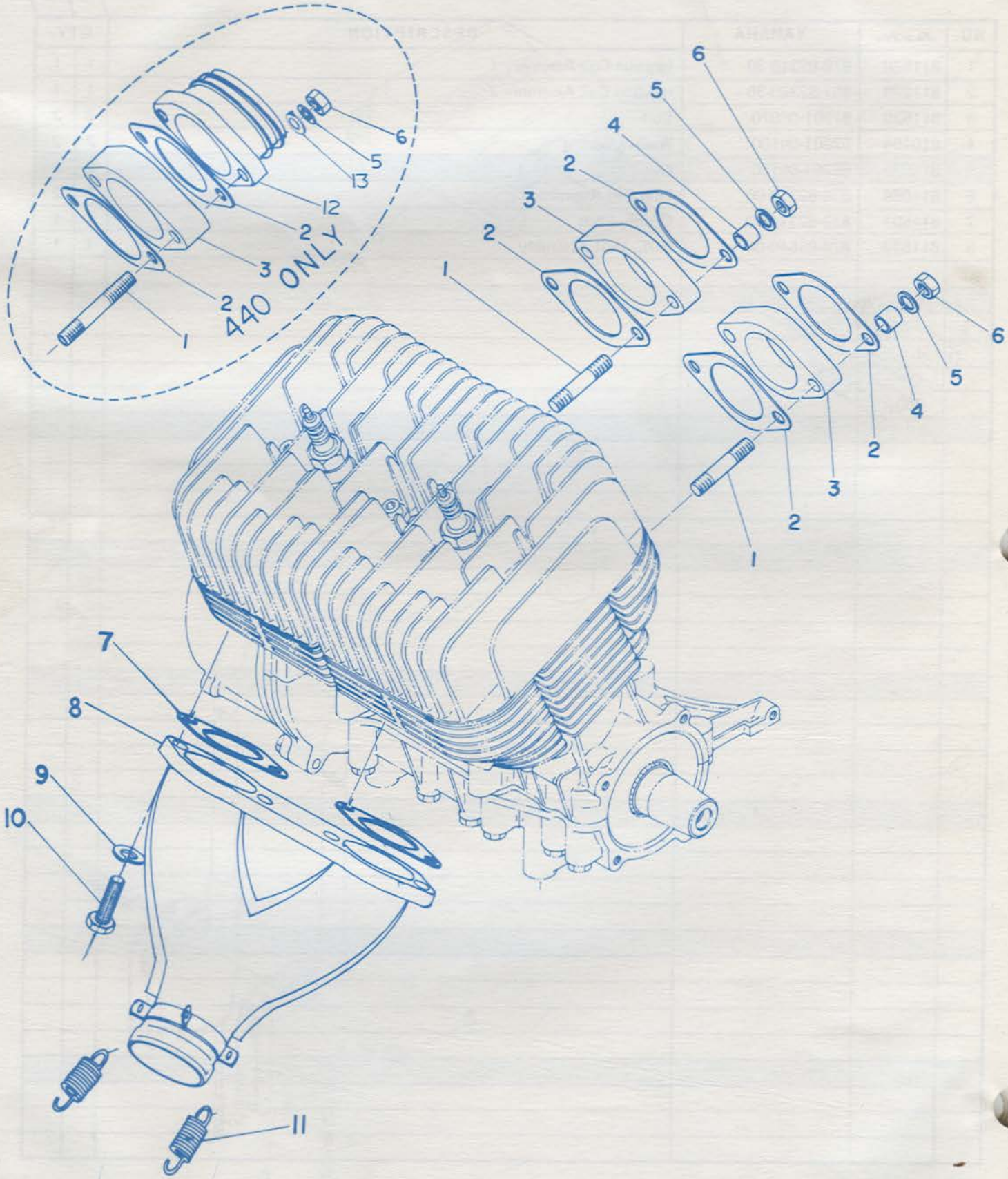

INTAKE-EXHAUST

NO.	Sno-Jet	YAMAHA	DESCRIPTION	QTY. SX338	QTY. SX433
1	811509	839-13558-00	Stud	4	
1	811429	90116-08162	Stud		4
2	811506	878-13556-09	Gasket	4	
2	810079	812-13556-70	Gasket		4
3	811507	878-13565-09	Joint	2	
3	811430	835-13585-00	Joint		2
4	810045	810-13576-00	Spacer	4	
5	810456	92901-08100	Washer, Spring	4	4
6	810508	98801-08300	Nut	4	4
7	810404	807-14613-00	Gasket Exhaust	2	2
8	030389	–	"Y" Manifold	1	
8	030321	–	"Y" Manifold		1
9	916707	–	Washer, Spring	4	4
10	810537	972-01080-25	Bolt	4	4
11	110087		Spring	3	2
12	790905	–	Flange		2
13	810457	92901-08200	Flat Washer		4

MEMO

HIRTH 193 R 03

292 C.C.
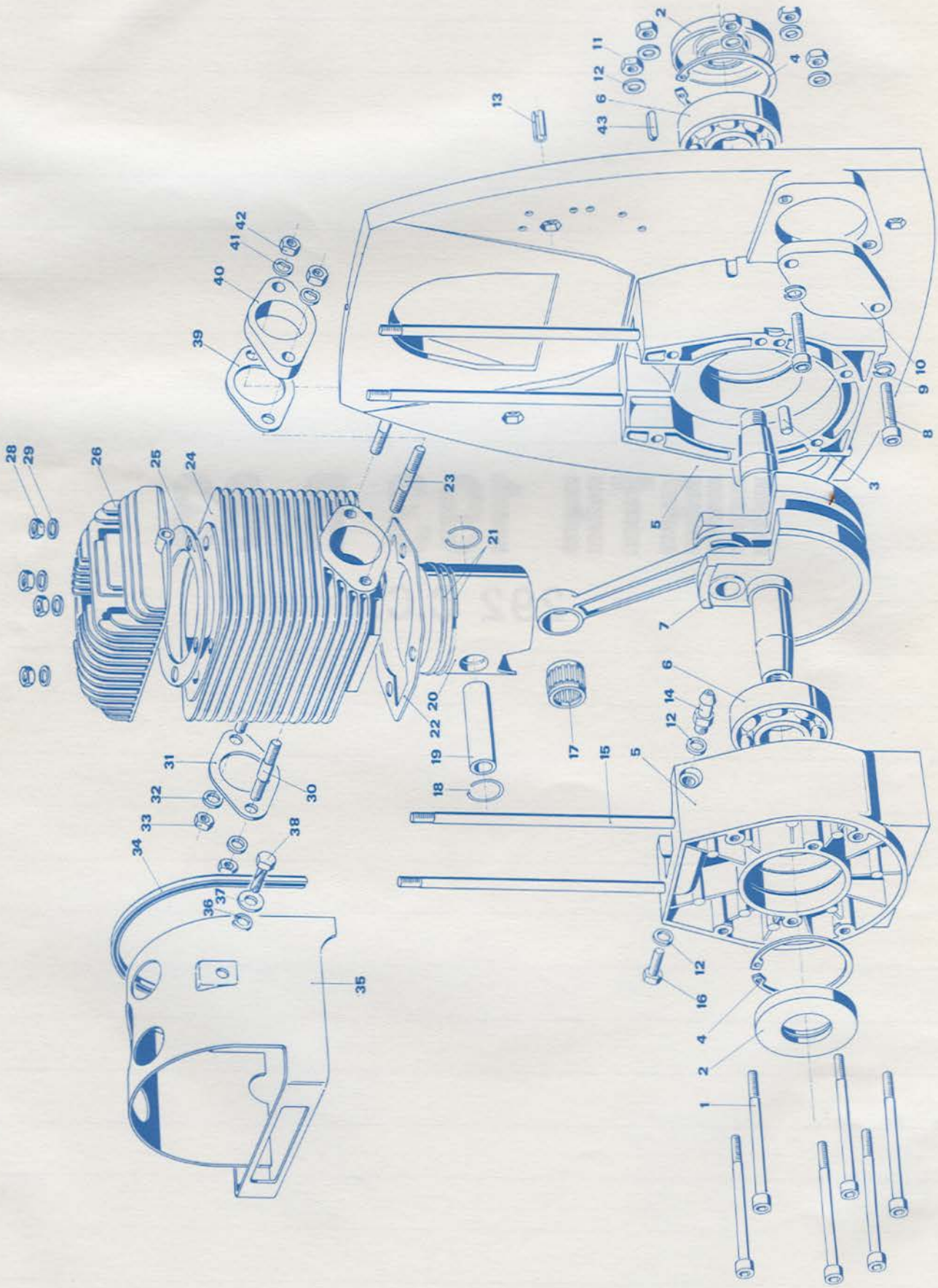
CRANK-PISTON-CRANKCASE
HIRTH 193 R03